P627 High Flow Gas Regulator

- Wide Range of Flow Capacities
- Durable Powder Coated Exterior
- Installation Versatility
- NACE Construction Available

The P627 is a spring loaded, direct-operated regulator for both low and high pressure applications in the oil and gas industries. These regulators provide durability, from the powder-coated epoxy exterior finish, as well as installation versatility, from the multi-position body and spring case configurations. These regulators are also available in an external pressure registration model (P627M), and NACE construction.

Applications

- Farm Tap Regulation
- Monitoring Regulators
- Gate Regulators
- Fuel Gas
- Gas Gathering
- Pressure Reduction

Materials of Construction

Body, Bonnet, Diaphragm Case	
Options	Steel Body, Bonnet & Diaphragm Case
	Cast Ductile Iron Body / Aluminum Bonnet & Diaphragm Case
	Steel Body / Aluminum Bonnet & Diaphragm Case (NACE only)
	Steel Casing / LCC Body
	Aluminum Casing / LCC Body
	CF8M SS Body, Bonnet & Diaphragm Case
Diaphragm	
Option	Nitrile (low pressure) or Neoprene (high pressure)
Seat	
Options	Nitrile
	Nylon
	Fluorocarbon
Orifice	
Options	Aluminum
	Stainless Steel (NACE only)

Specifications

Maximum Inlet Body Pressure		
Nylon Seat	2000 PSIG	Steel / SS
	1000 PSIG	Ductile Iron
	1485 PSIG	Flanged Steel
Nitrile Seat	1000 PSIG	All Units
Fluorocarbon Seat	300 PSIG	All Units
Outlet	5–500 PSIG	
Body Sizes	3⁄4 NPT	
	1 NPT	
	2 NPT	
Orifice Sizes	3⁄32"	
	1⁄8"	
	3⁄16"	
	1⁄4"	
	3⁄8"	
	1⁄2"	
	Outlet Range	Flow Range*
Output	5–20 PSIG	300–43,000
	15–40 PSIG	1,000–71,000
	35–80 PSIG	1,200–142,000
	10–95 PSIG	1,000–150,000
	70–150 PSIG	2,500–172,000
	140–250 PSIG	3,200–95,000
	240–500 PSIG	4,500–140,000
	* (SCFH of 0.6 S.G. Natural Gas)	
Temperature Range		
Steel, Iron Body	–20˚ to 180˚F	(–29˚ to 82˚C)
CF8M Body	–40˚ to 180˚F	(–40˚ to 82˚C)
Weight Approximate		
1"	5.3 lbs	2.39 kg
2"	8.8 lbs	3.96 kg

Maximum Bonnet and Diaphragm Casing Pressure	Spring & Diaphragm Casing Style	P627		P627M		P627H & P627HM	
		PSIG	BAR	PSIG	BAR	PSIG	BAR
Maximum pressure to spring and diaphragm casing to prevent leak to atmosphere (internal parts damage may occur).	Die Cast Aluminum	250	17.2	250	250	N/A	N/A
	Steel / SS	250	17.2	250	17.2	800	55.2
Maximum pressure to spring and diaphragm casings to prevent burst of casings during abnormal operation (leak to atmosphere and internal parts may occur).	Die Cast Aluminum	375	25.9	375	375	N/A	N/A
	Steel / SS	1200	82.7	1200	82.7	1200	82.7

P627 Regulator Rebuild Kits

	Kit Includes	Part Number
P627 Low Pressure	Nitrile diaphragms (2), Nitrile valve disk, O-rings, back-up rings, and retaining pin	971-627-000
	Nitrile diaphragms (2), Nylon valve disk, O-rings, back-up rings, and retaining pin.	971-627-001

	Kit Includes	Part Number
P627 Low Pressure NACE	Nitrile diaphragms (2), SS Nitrile valve disk, O-rings, back-up rings, and retaining pin	971-627-N00
	Nitrile diaphragms (2), SS Nylon valve disk, O-rings, back-up rings, and retaining pin	971-627-N01

P627 Part Matrix

P627							**1**			
									Port Size	
	06								3/4"	
	08								1"	
	16								2"	
									Spring Range	
									PSIG / BAR	
		020							5 - 20 / 0.34 - 1.4	NOTE: Nitrile or FKM is recommended for 5-20, 15-40 and 10-95 PSIG. Nylon is recommended for pressures above 150 PSIG or low pressure 3/32" & 1/8" orifice.
		040							15 - 40 / 1 - 2.8	
		080							35 - 80 / 2.4 - 5.5	
		095							10 - 95 / 0.7 - 6.6	
		150							70 - 150 / 4.8 - 10.3	
		250							140 - 250 / 9.7 - 17.2	
		500							240 - 500 / 16.5 - 34.5	
									Special Adders	
			0						None	
			2						Monitor	
			A						150 #RF*	*Steel, LCC Steel or Stainless Steel Bodies Only
			B						300 #RF*	
			C						600 #RF*	
			D						Socket Weld*	
			E						900 #RTJ*	
			W						150 #RF & Monitor*	
			X						300 #RF & Monitor*	
			Y						600 #RF & Monitor*	
			Z						Socket Weld & Monitor*	
									Versions	
				0					Standard	
				N					NACE	
				F					NACE & Fluorocarbon Elastomers	
				T					Stainless Trim	
									Orifice	
					0				3/32"	
					2				1/8"	
					3				3/16"	
					4				1/4"	
					6				3/8"	
					8				1/2"	
									Seat Material	NOTE: Nitrile or FKM is recommended for 5-20, 15-40 and 10-95 PSIG. Nylon is recommended for pressures above 150 PSIG or low pressure 3/32" & 1/8" orifice.
						0			Nitrile	
						1			Nylon	
						2			Fluorocarbon	
							1			
									Case / Body	
								0	Aluminum / Iron	
								1	Steel / Steel	
								2	Aluminum / Steel	
								6	Aluminum / LCC Steel	
								7	Steel / LCC Steel	
								8	Steel / Iron	
								9	Stainless / Stainless	

P627 Flow Capacities of Natural Gas (0.6 S.G.) in SCFH[1]

BelGAS

Outlet Pressure Range	Outlet Pressure Setting		Inlet Pressure		3/4" Body Size						1" Body Size					
					Port Diameter, inches						Port Diameter, inches					
	PSIG	BAR	PSIG	BAR	3/32	1/8	3/16	1/4	3/8	1/2	3/32	1/8	3/16	1/4	3/8	1/2
5 to 20 PSIG[2] (0.34 to 1.4 BAR)	5[3]	0.34	10	0.69	170	320	700	1060	1540	1900	170	330	710	1100	1900	2500
			15	1.0	240	330	810	1300	2150	3350	240	390	890	1600	2500	3350
			20	1.4	290	460	1140	1800	3050	4350	290	500	1160	2060	3400	4450
			30	2.1	380	610	1530	2490	3880	6850	380	670	1560	2800	4750	6900
			60	4.1	640	1170	2550	4240	6270	7370	640	1170	2600	4710	8140	13,700
			75	5.2	770	1410	3020	5100	6620	7700	770	1410	3150	5710	9790	14,500
			100	6.9	990	1800	3800	5980	7440	7900	990	1800	4070	7310	12,500	16,000
	10	0.69	15	1.03	210	320	800	1290	2100	3300	210	375	880	1590	2480	3300
			20	1.4	280	455	1130	1790	3000	4300	280	490	1150	2050	3380	4410
			30	2.1	380	610	1530	2480	3860	6830	380	670	1560	2800	4720	6840
			60	4.1	640	1170	2550	4240	6270	7370	640	1170	2600	4710	8140	13,700
			75	5.2	770	1410	3020	5100	6620	7700	770	1410	3150	5710	9790	14,500
			100	6.9	990	1800	3800	5980	7440	7900	990	1800	4070	7310	12,500	16,000
			150	10.3	1420	2580	5700	7130	8180	8200	1420	2580	5850	10,500	17,000	18,000
			200	13.8	1850	3370	6970	7250	8200	8300	1850	3370	7630	13,700	18,000	18,500
			300	20.7	2700	4910	8000	8050	8250		2700	4910	11,200	19,800	20,000	
			500	34.5	4010	8090	8060	8100			4400	8090	15,700	20,000		
			750	51.7	4400	8930	8950				5400	12,000	18,000			
			1000	69.0	4450	10,300					5800	14,000				
			1250	86.2	4540						6300					
			1500	103	4880						6600					
			1750	121	5230						6800					
			2000	138	5900						7600					
	20	1.4	30	2.1	350	620	1400	2490	4360	6290	350	620	1450	2580	4360	6290
			50	3.4	550	1000	2280	4010	7870	8500	550	1000	2280	4090	7870	14,100
			60	4.1	640	1170	2640	4680	8340	8940	640	1170	2640	4750	9690	14,500
			100	6.9	990	1800	3980	7220	11,500	12,600	990	1800	4070	7310	13,900	23,300
			150	10.3	1420	2580	5850	10,400	12,100	13,100	1420	2580	5850	10,500	17,700	34,200
			200	13.8	1850	3370	7340	12,000	13,200	13,700	1850	3370	7630	13,700	26,600	39,100
			300	20.7	2700	4910	11,200	13,000	15,600		2700	4910	11,200	20,100	37,000	
			500	34.5	4400	8090	18,300	15,100			4400	8090	18,300	32,900		
			750	51.7	6600	12,000	14,200				6600	12,000	23,600			
			1000	69.0	7300	14,600					8900	16,000				
			1250	86.2	7500						10,000					
			1500	103	7800						10,400					
			1750	121	8400						12,000					
			2000	138	8600						14,000					
15 to 40 PSIG (1.0 to 2.8 BAR)	40	2.8	60	4.1	610	1090	2530	4350	8140	9420	610	1090	2530	4510	9290	9420
			75	5.2	760	1370	3080	5510	10,300	13,600	760	1370	3080	5640	10,800	16,500
			100	6.9	990	1790	4070	7220	13,200	15,300	990	1790	4070	7310	14,700	21,900
			150	10.3	1420	2580	5850	10,400	17,400	18,200	1420	2580	5850	10,500	20,500	34,500
			200	13.8	1850	3370	7630	13,500	18,000	18,500	1850	3370	7630	13,700	27,100	46,400
			300	20.7	2700	4910	11,200	18,500	20,000	20,700	2700	4910	11,200	20,100	40,100	67,100
			500	34.5	4400	8090	18,300	24,000	27,000		4400	8090	18,300	32,900	63,900	
			750	51.7	6600	12,000	23,000	24,200			6600	12,000	27,200	39,400		
			1000	69.0	8700	16,000	24,400				8700	16,000	36,100			
			1250	86.2	11,000	18,000					11,000	19,000				
			1500	103	12,000	21,000					13,000	22,000				
			1750	121	13,000						15,000					
			2000	138	14,000						17,000					
35 to 80 PSIG (2.4 to 5.5 BAR)	60	4.1	75	5.2	700	1230	2760	4750	8620	15,200	700	1230	2760	4880	8630	16,100
			100	6.9	970	1740	4010	6990	12,800	17,300	970	1740	4010	7000	13,000	19,300
			150	10.3	1420	2580	5850	10,300	18,600	23,000	1420	2580	5850	10,500	18.900	32,800
			200	13.8	1850	3370	7630	13,500	21,600	27,400	1850	3370	7630	13,700	24.000	42,200
			300	20.7	2700	4910	11,200	19,800	26,100	30,100	2700	4910	11,200	20,100	32,500	69,100
			500	34.5	4400	8090	18,300	28,100	28,900	33,400	4400	8090	18,300	32,900	64,000	94,300
			750	51.8	6600	12,000	26,300	30,000	37,000	45,000	6600	12,000	27,200	43,380	66,000	130,000
			1000	69.0	8700	16,000	30,000	31,200	37,400		8700	16,000	36,100	50,300	67,700	
			1250	86.2	11,000	19,000	31,600	34,000			11,000	19,000	45,000	57,000		
			1500	103	13,000	22,000	30,400	36,000			13,000	22,000	54,000	63,000		
			1750	121	15,000	25,000	34,000				15,000	25,000	63,000			
			2000	138	17,000	28,000					17,000	28,000				
	80	5.5	100	5.2	900	1600	3750	6490	12,200	17,300	900	1600	3750	6650	12,200	18,600
			150	10.3	1410	2580	5850	10,200	19,600	25,700	1410	2580	5850	10,500	21,100	33,600
			200	13.8	1850	3370	7630	13,500	25,400	29,300	1850	3370	7630	13,700	28,400	44,100
			300	20.7	2700	4910	11,200	19,800	32,700	33,500	2700	4910	11,200	20,100	43,300	75,400
			500	34.5	4400	8090	18,300	31,900	36,000	36,700	4400	8090	18,300	32,900	71,600	110,000
			750	51.8	6600	12,000	27,200	35,000	44,000	46,000	6600	12,000	27,200	48,900	105,500	135,000
			1000	69.0	8700	16,000	36,100	38,000	56,200		8700	16,000	36,100	64,900	118,000	
			1250	86.2	11,000	19,000	37,000	40,000			11,000	19,000	45,000	80,000		
			1500	103	13,000	22,000	38,000	44,000			13,000	22,000	54,000	96,000		
			1750	121	15,000	25,000	42,000				15,000	25,000	63,000			
			2000	138	17,000	28,000					17,000	28,000				

1. Capacity is based on 20 percent droop unless otherwise noted below.
2. For pressure setting under 10 PSIG (0.69 BAR) limit the input pressure to 100 PSIG (6.9 BAR) to obtain the setpoint.
3. For 5 PSIG (0.34 BAR) pressure set point, the droop is 2 PSIG (0.14 BAR)

P627 Flow Capacities of Natural Gas (0.6 S.G.) in SCFH[1]

Outlet Pressure Range	Outlet Pressure Setting		Inlet Pressure		3/4" Body Size						1" Body Size					
					Port Diameter, inches						Port Diameter, inches					
	PSIG	BAR	PSIG	BAR	3/32	1/8	3/16	1/4	3/8	1/2	3/32	1/8	3/16	1/4	3/8	1/2
70 to 150 PSIG (4.8 to 10.3 BAR)	100	6.9	150	10.3	1170	2510	5540	8710	16,000	20,300	1170	2510	5540	8710	16,000	24,000
			200	13.8	1850	3370	7630	12,000	21,300	25,700	1850	3370	7630	12,000	21,300	34,100
			300	20.7	2700	4910	11,200	19,400	30,000	31,700	2700	4910	11,200	19,400	30,100	53,200
			500	34.5	4400	8090	18,300	31,800	39,000	39,200	4400	8090	18,300	31,800	66,500	83,900
			750	51.8	6600	12,000	27,200	39,000	39,200	45,900	6600	12,000	27,200	47,300	95,300	117,000
			1000	69.0	8700	16,000	36,100	40,000	40,500	47,000	8700	16,000	36,100	59,700	100,000	120,000
			1250	86.2	11,000	19,000	39,000	40,500	41,000		11,000	19,000	45,000	72,000	114,000	
			1500	103	13,000	22,000	43,000	44,000			13,000	22,000	54,000	86,000		
			1750	121	15,000	25,000	45,000	47,000			15,000	25,000	63,000	95,000		
			2000	138	17,000	28,000	46,000				17,000	28,000	71,000			
	125	8.6	150	10.3	1250	2340	5340	9130	15,700	20,800	1250	2340	5340	9470	15,700	20,800
			200	13.8	1830	3320	7550	13,160	22,500	28,600	1830	3320	7550	13,400	28,100	32,800
			300	20.7	2700	4910	11,200	19,800	32,700	38,000	2700	4910	11,200	20,100	36,300	52,600
			500	34.5	4400	8090	18,300	32,500	43,800	51,700	4400	8090	18,300	32,900	70,800	109,000
			750	51.8	6600	12,000	27,200	48,300	49,900	71,400	6600	12,000	27,200	48,900	104,000	158,000
			1000	69.0	8700	16,000	36,100	50,000	52,900	72,000	8700	16,000	36,100	64,800	138,000	160,000
			1250	86.2	11,000	19,000	45,000	53,000	58,000		11,000	19,000	45,000	80,000	145,000	
			1500	10.	13,000	22,000	51,000	56,000			13,000	22,000	54,000	96,000		
			1750	121	15,000	25,000	52,000	60,000			15,000	25,000	63,000	112,000		
			2000	138	17,000	28,000	53,000				17,000	28,000	71,000			
	150	10.3	200	13.8	1760	3200	7290	12,500	21,400	30,600	1760	3200	7290	12,900	21,400	33,600
			300	20.7	2700	4910	11,200	17,200	34,700	46,000	2700	4910	11,200	17,200	40,100	55,900
			500	34.5	4400	8090	18,300	32,500	48,900	59,700	4400	8090	18,300	32,900	70,300	111,000
			750	51.8	6600	12,000	27,200	48,300	59,000	72,000	6600	12,000	27,200	48,900	104,000	160,000
			1000	69.0	8700	16,000	36,100	64,100	81,100	85,000	8700	16,000	36,100	64,800	138,000	162,000
			1250	86.2	11,000	19,000	45,000	68,000	90,000		11,000	19,000	45,000	80,000	150,000	
			1500	103	13,000	22,000	54,000	72,000			13,000	22,000	54,000	96,000		
			1750	121	15,000	25,000	63,000	77,000			15,000	25,000	63,000	112,000		
			2000	138	17,000	28,000	71,000				17,000	28,000	71,000			

Outlet Pressure Range	Outlet Pressure Setting		Inlet Pressure		627 – 2" Body Size						627M – 2" Body Size					
					Port Diameter, inches						Port Diameter, inches					
	PSIG	BAR	PSIG	BAR	3/32	1/8	3/16	1/4	3/8	1/2	3/32	1/8	3/16	1/4	3/8	1/2
5 to 20 psig[2] (0.34 to 1.4 BAR)	5[3]	0.34	10	0.69	170	330	710	1080	1700	2400	170	330	710	1080	1700	2400
			15	1.0	240	390	890	1250	1900	2700	240	390	890	1250	1900	2700
			20	1.4	290	500	1160	1900	2650	3900	290	500	1160	1900	2650	3900
			30	2.1	380	670	1560	2800	3680	6500	380	670	1560	2800	3680	6500
			60	4.1	640	1170	2600	4750	7250	17,800	640	1170	2600	4750	7250	15,000
			75	5.2	770	1410	3150	5700	8060	22,400	770	1410	3150	5700	8060	17,900
			100	6.9	990	1790	4070	7310	16,200	28,700	990	1790	4070	7310	14,600	23,000
	10	0.69	15	1.03	210	375	880	1220	1860	2670	210	375	880	1220	1860	2670
			20	1.4	280	490	1150	1880	2610	3830	280	490	1150	1880	2610	3830
			30	2.1	380	670	1560	2760	3640	6460	380	670	1560	2760	3640	6460
			60	4.1	640	1170	2600	4750	7250	17,800	640	1170	2600	4750	7250	15,000
			75	5.2	770	1410	3150	5700	8060	22,400	770	1410	3150	5700	8060	17,900
			100	6.9	990	1790	4070	7310	16,200	28,700	990	1790	4070	7310	14,600	23,000
			150	10.3	1420	2580	5850	10,500	23,300	25,900[5]	1420	2580	5850	10,500	21,000	33,000
			200	13.8	1850	3370	7630	13,700	22,700[5]	24,000[5]	1850	3370	7630	13,700	27,300	43,000
			300	20.7	2700	4910	11,200	10,300[5]	12,800[5]		2700	4910	11,200	20,100	40,100	
			500	34.5	4400	8090	18,300	21,000[5]			4400	8090	18,300	32,900		
			750	51.7	6600	12,000	27,200				6600	12,000	27,200			
			1000	69.0	8700	16,000					8700	16,000				
			1250	86.2	11.000						11,000					
			1500	103	13,000						13,000					
			1750	121	15,000						15,000					
			2000	138	17,000						17,000					
	20	1.4	30	2.1	350	620	1450	2350	4300	6110	350	620	1450	2480	4300	6110
			50	3.4	550	1000	2280	4040	7100	12,800	550	1000	2280	4040	7100	12,800
			60	4.1	640	1170	2640	4750	8400	15,700	640	1170	2640	4750	8400	15,000
			100	6.9	990	1800	4070	7310	16,200	28,700	990	1800	4070	7310	14,600	23,000
			150	10.3	1420	2580	5850	10,500	23,300	29,000[5]	1420	2580	5850	10,500	21,000	33,000
			200	13.8	1850	3370	7630	13,700	24,000[5]	33,000[5]	1850	3370	7630	13,700	27,300	43,000
			300	20.7	2700	4910	11,200	20,100	19,600[5]		2700	4910	11,200	20,100	40,100	
			500	34.5	4400	8090	18,300	32,900			4400	8090	18,300	32,900		
			750	51.7	6600	12,000	27,200				6600	12,000	27,200			
			1000	69.0	8700	16,000					8700	16,000				
			1250	86.2	11,000						11,000					
			1500	103	13,000						13,000					
			1750	121	15,000						15,000					
			2000	138	17,000						17,000					

1. Capacity is based on 20 percent droop unless otherwise noted below.
2. For pressure setting under 10 PSIG (0.69 BAR) limit the input pressure to 100 PSIG (6.9 BAR) to obtain the setpoint.
3. For 5 PSIG (0.34 BAR) pressure set point, the droop is 2 PSIG (0.14 BAR)
5. Capacities are based on 25 percent boost if setting is less than 12 PSIG (0.8 BAR), 3 PSIG (0.2 BAR) boost if setting is from 12 to 60 PSIG (0.2 to 4 BAR), and 5 percent boost if setting is greater than 60 PSIG (4 BAR).

P627 Flow Capacities of Natural Gas (0.6 S.G.) in SCFH[1]

BelGAS

Outlet Pressure Range	Outlet Pressure Setting		Inlet Pressure		627 – 2" Body Size						627M – 2" Body Size					
					Port Diameter, inches						Port Diameter, inches					
	PSIG	BAR	PSIG	BAR	3/32	1/8	3/16	1/4	3/8	1/2	3/32	1/8	3/16	1/4	3/8	1/2
15 to 40 PSIG (1.0 to 2.8 BAR)	40	2.8	60	4.1	610	1090	2530	4370	8680	13,300	610	1090	2530	4370	8680	13,300
			75	5.2	760	1370	3080	5540	11,900	19,300	760	1370	3080	5540	10,700	19,300
			100	6.9	990	1800	4070	7310	16,200	25,400	990	1800	4070	7310	14,600	25,400
			150	10.3	1420	2580	5850	10,500	23,300	41,300	1420	2580	5850	10,500	21,000	37,000
			200	13.8	1850	3370	7630	13,700	30,400	53,900	1850	3370	7630	13,700	27,300	48,000
			300	20.7	2700	4910	11,200	20,100	44,600	46,000[5]	2700	4910	11,200	20,100	40,100	71,000
			500	34.5	4400	8090	18,300	32,900	22,000[5]		4400	8090	18,300	32,900	65,000	
			750	51.7	6600	12,000	27,200	28,000[5]			6600	12,000	27,200	48,900		
			1000	69.0	8700	16,000	36,100				8700	16,000	36,100			
			1250	86.2	11,000	19,000					11,000	19,000				
			1500	103	13,000	22,000					13,000	22,000				
			1750		15,000						15,000					
			2000		17,000						17,000					
35 to 80 PSIG (2.4 to 5.5 BAR)	60	4.1	75	5.2	700	1260	2760	4900	9000	12,300	700	1230	2760	4900	9000	12,300
			100	6.9	970	1740	4010	7000	15,000	20,400	970	1740	4010	7000	15,000	20,400
			150	10.3	1420	2580	5850	10,500	23,300	35,200	1420	2580	5850	10,500	23,300	35,200
			200	13.8	1850	3370	7630	13,700	30,400	53,900	1850	3370	7630	13,700	30,400	48,500
			300	20.7	2700	4910	11,200	20,100	44,600	79,000[5]	2700	4910	11,200	20,100	44,600	71,000
			500	34.5	4400	8090	18,300	32,900	73,000[5]	38,800[5]	4400	8090	18,300	32,900	73,000	116,000
			750	51.8	6600	12,000	27,200	48,900[5]	53,000[5]	32,000	6600	12,000	27,200	48,900	108,000	172,000
			1000	69.0	8700	16,000	36,100	43,000[5]	52,000		8700	16,000	36,100	65,000	144,000	
			1250	86.2	11,000	19,000	45,000	70,000[5]			11,000	19,000	45,000	81,000		
			1500	103	13,000	22,000	54,000[5]	43,000			13,000	22,000	54,000	97,000		
			1750	121	15,000	25,000	26,000				15,000	25,000	63,000			
			2000	138	17,000	28,000					17,000	28,000				
	80	5.5	100	5.2	900	1630	3750	6400	12,000	20,400	900	1630	3750	6400	12,800	20,400
			150	10.3	1410	2580	5850	10,500	23,300	41,300	1410	2580	5850	10,500	23,300	37,200
			200	13.8	1850	3370	7630	13,700	30,400	53,900	1850	3370	7630	13,700	30,400	48,500
			300	20.7	2700	4910	11,200	20,100	44,600	79,000[5]	2700	4910	11,200	20,100	44,600	71,000
			500	34.5	4400	8090	18,300	32,900	73,000[5]	48,000[5]	4400	8090	18,300	32,900	73,000	116,000
			750	51.8	6600	12,000	27,200	48,900	87,000[5]	44,000	6600	12,000	27,200	48,900	108,000	172,000
			1000	69.0	8700	16,000	36,100	65,000[5]	63,000		8700	16,000	36,100	65,000	144,000	
			1250	86.2	11,000	19,000	45,000	63,000[5]			11,000	19,000	45,000	81,000		
			1500	103	13,000	22,000	54,000	86,000			13,000	22,000	54,000	97,000		
			1750	121	15,000	25,000	63,000				15,000	25,000	63,000			
			2000	138	17,000	28,000					17,000	28,000				
70 to 150 PSIG (4.8 to 10.3 BAR)	100	6.9	150	10.3	1170	2510	5540	8600	16,000	22,000	1170	2510	5540	8600	16,000	22,000
			200	13.8	1850	3370	7630	13,700	22,000	33,000	1850	3370	7630	13,700	22,000	33,000
			300	20.7	2700	4910	11,200	20,100	35,000	65,300	2700	4910	11,200	20,100	35,000	59,000
			500	34.5	4400	8090	18,300	32,900	73,000	129,000	4400	8090	18,300	32,900	73,000	116,000
			750	51.8	6600	12,000	27,200	48,900	108,000	54,000[5]	6600	12,000	27,200	48,900	108,000	172,000
			1000	69.0	8700	16,000	36,100	64,800	82,000[5]		8700	16,000	36,100	64,800	144,000	
			1250	86.2	11,000	19,000	45,000	80,000	110,000[5]		11,000	19,000	45,000	80,000	179,000	
			1500	103	13,000	22,000	54,000	96,000			13,000	22,000	54,000	96,000		
			1750	121	15,000	25,000	63,000	112,000			15,000	25,000	63,000	112,000		
			2000	138	17,000	28,000	71,000				17,000	28,000	71,000			
	125	8.6	150	10.3	1250	2340	5340	8600	16,000	24,000	1250	2340	5340	8600	16,000	24,000
			200	13.8	1830	3320	7550	13,000	24,000	36,000	1830	3320	7550	13,000	24,000	36,000
			300	20.7	2700	4910	11,200	20,100	39,000	65,300	2700	4910	11,200	20,100	39,000	59,000
			500	34.5	4400	8090	18,300	32,900	73,000	129,000	4400	8090	18,300	32,900	73,000	116,000
			750	51.8	6600	12,000	27,200	48,900	108,000	59,000[5]	6600	12,000	27,200	48,900	108,000	172,000
			1000	69.0	8700	16,000	36,100	64,800	58,000[5]		8700	16,000	36,100	64,800	144,000	
			1250	86.2	11,000	19,000	45,000	80,000	75,000[5]		11,000	19,000	45,000	80,000	179,000	
			1500	103	13,000	22,000	54,000	96,000			13,000	22,000	54,000	96,000		
			1750	121	15,000	25,000	63,000	112,000			15,000	25,000	63,000	112,000		
			2000	138	17,000	28,000	71,000				17,000	28,000	71,000			
	150	10.3	200	13.8	1760	3200	7290	13,000	24,000	38,000	1760	3200	7290	13,000	24,000	38,000
			300	20.7	2700	4910	11,200	20,100	44,600	64,200	2700	4910	11,200	20,100	44,600	58,000
			500	34.5	4400	8090	18,300	32,900	73,000	129,000	4400	8090	18,300	32,900	73,000	116,000
			750	51.8	6600	12,000	27,200	48,900	108,000	62,000[5]	6600	12,000	27,200	48,900	108,000	172,000
			1000	69.0	8700	16,000	36,100	64,800	144,000		8700	16,000	36,100	64,800	144,000	
			1250	86.2	11,000	19,000	45,000	80,000	81,000[5]		11,000	19,000	45,000	80,000	179,000	
			1500	103	13,000	22,000	54,000	96,000			13,000	22,000	54,000	96,000		
			1750	121	15,000	25,000	63,000	112,000			15,000	25,000	63,000	112,000		
			2000	138	17,000	28,000	71,000				17,000	28,000	71,000			

1. Capacity is based on 20 percent droop unless otherwise noted below.
5. Capacities are based on 25 percent boost if setting is less than 12 PSIG (0.8 BAR), 3 PSIG (0.2 BAR) boost if setting is from 12 to 60 PSIG (0.2 to 4 BAR), and 5 percent boost if setting is greater than 60 PSIG (4 BAR).

P627 Flow Capacities of Natural Gas (0.6 S.G.) in SCFH[1]

Outlet Pressure Range	Outlet Pressure Setting		Inlet Pressure		627H or HM – 3/4" Body Size						627H or HM – 1" Body Size					
					Port Diameter, inches						Port Diameter, inches					
	PSIG	BAR	PSIG	BAR	3/32	1/8	3/16	1/4	3/8	1/2	3/32	1/8	3/16	1/4	3/8	1/2
140 to 250 PSIG (9.7 to 17.2 BAR)	150	10.3	200	13.8	1760[6]	3200[4]	7290	11,500	21,600	31,000	1760[6]	3200[4]	7290	11,500	21,600	31,000
			250	17.2	2260[6]	4100[4]	9200	15,400	28,600	40,000	2260[6]	4100[4]	9200	15,400	28,600	40,000
			300	20.7	2700	4910	11,200	19,300	31,000	46,000	2700	4910	11,200	19,300	31,000	46,000
			400	27.6	3600	6500	14,800	24,700	40,000	50,000	3600	6500	14,800	25,000	40,000	50,000
			500	34.5	4400	8090	18,300	29,700	51,000		4400	8090	18,300	32,000	51,000	
			750	51.7	6600	12,000	27,200	43,000			6600	12,000	27,200	46,000		
			1000	69.0	8700	16,000	36,100	57,000			8700	16,000	36,100	60,000		
			1250	86.2	11,000	19,000	45,000				11,000	19,000	45,000			
			1500	103	13,000	22,000	54,000				13,000	22,000	54,000			
			1750	121	15,000	25,000	63,000				15,000	25,000	63,000			
			2000	138	17,000	28,000					17,000	28,000				
	200	13.8	250	17.2	2160[6]	3850[4]	8400	15,000	31,000	41,000	2160[6]	3850[4]	8400	15,000	31,000	41,000
			300	20.7	2700[6]	4910[4]	11,200	19,500	36,000	52,000	2700[6]	4910[4]	11,200	19,500	36,000	52,000
			400	27.6	3600	6500	14,800	25,500	52,000	68,000	3600	6500	14,800	26,500	52,000	68,000
			500	34.5	4400	8090	18,300	31,000	61,000		4400	8090	18,300	33,000	61,000	
			750	51.7	6600	12,000	27,200	45,500			6600	12,000	27,200	49,000		
			1000	69.0	8700	16,000	36,100	60,000			8700	16,000	36,100	65,000		
			1250	86.2	11,000	19,000	45,000				11,000	19,000	45,000			
			1500	103	13,000	22,000	54,000				13,000	22,000	54,000			
			1750	121	15,000	25,000	63,000				15,000	25,000	63,000			
			2000	138	17,000	28,000					17,000	28,000				
	250	17.2	300	20.7	2500[6]	4500[4]	9900	18,500	37,000	52,000	2500[6]	4500[4]	9900	18,500	37,000	75,000
			400	27.6	3600[6]	6400[4]	14,300	26,000	55,000	74,000	3600[6]	6400[4]	14,300	26,000	55,000	81,000
			500	34.5	4400	8090	18,300	33,000	64,000	87,000	4400	8090	18,300	33,000	64,000	95,000
			750	21.7	6600	12,000	27,200	49,000	93,000		6600	12,000	27,200	49,000	102,000	
			1000	69.0	8700	16,000	36,100	65,000			8700	16,000	36,100	65,000		
			1250	86.2	11,000	19,000	45,000	81,000			11,000	19,000	45,000	81,000		
			1500	103	13,000	22,000	54,000				13,000	22,000	54,000			
			1750	121	15,000	25,000	63,000				15,000	25,000	63,000			
			2000	138	17,000	28,000	71,000				17,000	28,000	71,000			
240 to 500 PSIG (16.5 to 34.5 BAR)	250	17.2	300	20.7	2500[6]	4500[4]	9300	14,000	25,000	37,000	2500[6]	4500[4]	9300	14,000	25,000	37,000
			400	27.6	3600[6]	6400[4]	14,300	21,400	36,000	49,000	3600[6]	6400[4]	14,300	21,400	36,000	49,000
			500	34.6	4400	8090	18,300	26,300	42,000	62,000	4400	8090	18,300	26,300	42,000	62,000
			750	51.7	6600	12,000	27,200	37,100	57,000		6600	12,000	27,200	37,100	57,000	
			1000	69.0	8700	16,000	36,100	47,400			8700	16,000	36,100	47,400		
			1250	86.2	11,000	19,000	45,000	57,000			11,000	19,000	45,000	57,000		
			1500	103	13,000	22,000	54,000				13,000	22,000	54,000			
			1750	121	15,000	25,000	63,000				15,000	25,000	63,000			
			2000	138	17,000	28,000	71,000				17,000	28,000	71,000			
	300	20.7	350	24.1	2900[6]	5150[4]	11,300	18,400	31,000	45,000	2900[6]	5150[4]	11,300	18,400	31,000	45,000
			400	27.6	3500[6]	6200[4]	13,700	23,400	40,000	52,000	3500[6]	6200[4]	13,700	23,400	40,000	52,000
			500	34.5	4400	8090	18,300	32,000	53,000	67,000	4400	8090	18,300	32,000	53,000	67,000
			750	51.7	6600	12,000	27,200	48,000	80,000		6600	12,000	27,200	48,000	80,000	
			1000	69.0	8700	16,000	36,100	62,000			8700	16,000	36,100	62,000		
			1250	86.2	11,000	19,000	45,000	79,000			11,000	19,000	45,000	79,000		
			1500	103	13,000	22,000	54,000				13,000	22,000	54,000			
			1750	121	15,000	25,000	63,000				15,000	25,000	63,000			
			2000	138	17,000	28,000	71,000				17,000	28,000	71,000			
240 to 500 PSIG (16.5 to 34.5 BAR)	400	27.6	450	31.0	3600[6]	6400[4]	14,000	25,000	47,000	67,000	3600[6]	6400[4]	14,000	25,000	47,000	67,000
			500	34.6	4400[6]	8090[4]	18,300	32,000	54,000	77,000	4400[6]	8090[4]	18,300	32,000	54,000	77,000
			750	51.7	6600	12,000	27,200	49,000	91,000		6600	12,000	27,200	49,000	91,000	
			1000	69.0	8700	16,000	36,100	65,000			8700	16,000	36,100	65,000		
			1250	86.2	11,000	19,000	45,000	81,000			11,000	19,000	45,000	81,000		
			1500	103	13,000	22,000	54,000				13,000	22,000	54,000			
			1750	121	15,000	25,000	63,000				15,000	25,000	63,000			
			2000	138	17,000	28,000	71,000				17,000	28,000	71,000			
	500	34.5	550	37.9	4300[6]	7700[4]	16,800	33,000	62,000	90,000	4300[6]	7700[4]	16,800	33,000	62,000	90,000
			600	47.4	4900[6]	8800[4]	19,400	37,000	70,000	104,000	4900[6]	8800[4]	19,400	37,000	70,000	104,000
			750	51.7	6600	12,000	27,200	49,000	88,000	137,000	6600	12,000	27,200	49,000	88,000	140,000
			1000	69.0	8700	16,000	36,100	65,000	130,000		8700	16,000	36,100	65,000	130,000	
			1250	86.2	11,000	19,000	45,000	81,000			11,000	19,000	45,000	81,000		
			1500	103	13,000	22,000	54,000	97,000			13,000	22,000	54,000	97,000		
			1750	121	15,000	25,000	63,000				15,000	25,000	63,000			
			2000	138	17,000	28,000	71,000				17,000	28,000	71,000			

1. Capacity is based on 20 percent droop unless otherwise noted below.
4. Outlet pressure setting may shift ±15 PSIG.
6. Small orifices and low pressure drops may cause the set point to shift +15 PSIG (1.3 BAR).

P627 Flow Capacities of Natural Gas (0.6 S.G.) in SCFH[1]

Outlet Pressure Range	Outlet Pressure Setting		Inlet Pressure		627H or HM – 2" Body Size					
					Port Diameter, inches					
	PSIG	BAR	PSIG	BAR	3/32	1/8	3/16	1/4	3/8	1/2
140 to 250 PSIG (9.7 to 17.2 BAR)	150	10.3	200	13.8	1760[6]	3200[4]	7290	13,700	24,100	31,000
			250	17.2	2260[6]	4100[4]	9200	16,100	28,600	40,000
			300	20.7	2700	4910	11,200	19,300	31,000	46,000
			400	27.6	3600	6500	14,800	25,000	40,000	50,000
			500	34.5	4400	8090	18,300	32,000		
			750	51.7	6600	12,000	27,200	48,000		
			1000	69.0	8700	16,000	36,100	65,000		
			1250	86.2	11,000	19,000	45,000			
			1500	103	13,000	22,000	54,000			
			1750	121	15,000	25,000	63,000			
			2000	138	17,000	28,000				
	200	13.8	250	17.2	2160[6]	3850[4]	8400	16,100	33,000	41,000
			300	20.7	2700[6]	4910[4]	11,200	20,100	36,000	52,000
			400	27.6	3600	6500	14,800	26,500	52,000	68,000
			500	34.5	4400	8090	18,300	33,000	61,000	
			750	51.7	6600	12,000	27,200	49,000		
			1000	69.0	8700	16,000	36,100	65,000		
			1250	86.2	11,000	19,000	45,000			
			1500	103	13,000	22,000	54,000			
			1750	121	15,000	25,000	63,000			
			2000	138	17,000	28,000				
	250	17.2	300	20.7	2500[6]	4500[4]	9900	18,500	37,000	75,000
			400	27.6	3600[6]	6400[4]	14,300	26,000	55,000	81,000
			500	34.5	4400	8090	18,300	33,000	64,000	95,000
			750	21.7	6600	12,000	27,200	49,000	102,000	
			1000	69.0	8700	16,000	36,100	65,000		
			1250	86.2	11,000	19,000	45,000	81,000		
			1500	103	13,000	22,000	54,000			
			1750	121	15,000	25,000	63,000			
			2000	138	17,000	28,000	71,000			
240 to 500 PSIG (16.5 to 34.5 BAR)	250	17.2	300	20.7	2500[6]	4500[4]	9300	14,000	25,000	37,000
			400	27.6	3600[6]	6400[4]	14,300	21,400	36,000	49,000
			500	34.6	4400	8090	18,300	26,300	42,000	62,000
			750	51.7	6600	12,000	27,200	37,100	57,000	
			1000	69.0	8700	16,000	36,100	47,400		
			1250	86.2	11,000	19,000	45,000	57,000		
			1500	103	13,000	22,000	54,000			
			1750	121	15,000	25,000	63,000			
			2000	138	17,000	28,000	71,000			
	300	20.7	350	24.1	2900[6]	5150[4]	11,300	18,400	31,000	45,000
			400	27.6	3500[6]	6200[4]	13,700	23,400	40,000	52,000
			500	34.5	4400	8090	18,300	32,000	53,000	67,000
			750	51.7	6600	12,000	27,200	48,000	80,000	
			1000	69.0	8700	16,000	36,100	62,000		
			1250	86.2	11,000	19,000	45,000	79,000		
			1500	103	13,000	22,000	54,000			
			1750	121	15,000	25,000	63,000			
			2000	138	17,000	28,000	71,000			
240 to 500 PSIG (16.5 to 34.5 BAR)	400	27.6	450	31.0	3600[6]	6400[4]	14,000	25,000	47,000	67,000
			500	34.6	4400[6]	8090[4]	18,300	32,000	54,000	77,000
			750	51.7	6600	12,000	27,200	49,000	91,000	
			1000	69.0	8700	16,000	36,100	65,000		
			1250	86.2	11,000	19,000	45,000	81,000		
			1500	103	13,000	22,000	54,000			
			1750	121	15,000	25,000	63,000			
			2000	138	17,000	28,000	71,000			
	500	34.5	550	37.9	4300[6]	7700[4]	16,800	33,000	62,000	90,000
			600	47.4	4900[6]	8800[4]	19,400	37,000	70,000	104,000
			750	51.7	6600	12,000	27,200	49,000	88,000	140,000
			1000	69.0	8700	16,000	36,100	65,000	130,000	
			1250	86.2	11,000	19,000	45,000	81,000		
			1500	103	13,000	22,000	54,000	97,000		
			1750	121	15,000	25,000	63,000			
			2000	138	17,000	28,000	71,000			

1. Capacity is based on 20 percent droop unless otherwise noted below.
4. Outlet pressure setting may shift ±15 PSIG.
6. [illegible] may cause the set point to shift +15 PSIG (1.3 BAR).

P627 Flow Coefficients

Orifice Size		3/4 Inch Body			1 Inch (DIN 25) Body			2 Inch (DIN 50) Body			K
Inches	mm	Wide-Open C_g for External Relief Sizing	Wide-Open C_v for External Relief Sizing	C_1	Wide-Open C_g for External Relief Sizing	Wide-Open C_v for External Relief Sizing	C_1	Wide-Open C_g for External Relief Sizing	Wide-Open C_v for External Relief Sizing	C_1	
3/32	2.4	6.9	0.24	29.2	6.9	0.24	28.5	6.9	0.23	29.7	0.72
1/8	3.2	12.5	0.43	29.1	12.5	0.43	29.4	12.5	0.42	29.5	0.62
3/16	4.8	29	1.01	28.6	29	0.93	31.2	29	1.02	28.5	0.72
1/4	6.4	50	1.63	30.5	50	1.71	29.3	52	1.66	31.3	0.76
3/8	9.5	108	2.99	36.1	108	3.42	31.6	115	3.39	33.9	0.79
1/2	12.7	190	4.87	39.0	190	5.29	35.9	200	5.01	39.9	.074

P627 Parts

Item	Description	Qty.	Part Number
1	Cover Adj. Screw, Plastic	1	610-053-000
2	Adjustment Screw	1	648-465-000
3	Locknut	1	634-154-000
4	Bonnet, P627 - Aluminum	1	604-210-000
	Bonnet, P627M, P627H & P627HM - Steel		604-211-000
	Bonnet, P627 - Stainless		604-266-000
5	Vent Screw Assembly	1	836-005-000
6	Spring Guide, Upper	1	626-079-000
7	Range Spring	1	
	5-20 PSIG–Yellow		655-661-000
	15-40 PSIG–Green		655-661-001
	35-80 PSIG & 10-95–PSIG Blue		655-661-002
	70-150 PSIG–Red		655-661-003
	140-250 PSIG–Blue		655-661-002
	240-500 PSIG–Red		655-661-003
8	Spring Guide, Lower (P627 or P627M only)	1	643-191-000
9	Al Spring Case Screws - P627	8	648-466-000
	Steel Spring Case Screws - P627 or P627M		648-467-003
	Steel Spring Case Screws - P627H or P627HM		648-467-002
	SS Spring Case Screws - P627 or P627M		648-550-000
	SS Spring Case Screws - P627H or P627HM		648-550-001
10	Diaphragm Piston (P627 or P627M only)	1	637-306-000
11	Diaphragm P627 & P627M Al / Iron (Nitrile)	1	618-069-000
	Diaphragm P627 & P627M Steel / SS (Nitrile)		618-070-000
	Diaphragm P627H & P627HM Steel / SS (Neoprene)		618-070-001
	Diaphragm P627 & P627M Al / Iron (Fluoro)		618-069-001
	Diaphragm P627 & P627M Steel / SS (Fluoro)		618-096-000
	Diaphragm P627H & P627HM Steel / SS (Fluoro)		618-096-001
12	Screw, Diaphragm P627 & P627M	1	648-466-002
	Screw, Diaphragm P627H & P627HM	1	648-467-000
13	Post, Pusher P627 & P627M Assy	1	827-005-000
	Post, Pusher P627H & P627HM Assy		827-005-001
	Post, Pusher P627 & P627M, NACE		827-008-000
	Post, Pusher P627H & P627HM, NACE		827-008-001
14	Diaphragm Case P627 - Aluminum	1	629-202-000
	Diaphragm Case P627 & P627H - Steel		629-203-000
	Diaphragm Case P627M & P627HM- Steel		629-204-000
	Diaphragm Case, Aluminum (for Steel Body)		629-215-000
	Diaphragm Case P627 - Stainless		629-242-000
	Diaphragm Case P627H - Stainless		629-243-000
15	Lever, Stainless	1	703-011-000
	Lever		703-004-000
	Lever, NACE		703-005-000
16	Lever Screw	2	648-466-002
	Lever Screw, NACE		648-474-000
17	Pin, Lever	1	635-053-000
	Pin, Lever, NACE		635-057-000
18	Lever Retainer, Stainless	1	643-210-000
	Lever Retainer		643-192-000
	Lever Retainer, NACE		643-194-000
19	Stem O-ring, Nitrile	1	649-000-003
	Stem O-ring, Fluorocarbon		649-000-343
20	Stem Backup Ring, TFE	2	644-047-000
21	Pin, Groove, Stainless	1	635-076-000
	Pin, Groove		635-054-000
	Pin, Groove,Nace		635-058-000
22	Stem Guide	1	626-083-000

Item	Description	Qty.	Part Number
24	Stem, 316SS	1	689-005-000
25	Diaphragm Case O-ring, Nitrile (P627 & P627H)	1	649-280-000
	Diaphragm Case O-ring, Fluorocarbon (P627 & P627H)		649-280-001
26	Boost Body P627 or P627H	1	686-003-000
27	Stabilizer, Nitrile (P627 & P627H)	1	649-278-000
	Stabilizer, Fluorocarbon (P627 & P627H)		649-278-001
28	Seat assembly - Aluminum holder/nitrile disk	1	822-019-000
	Seat assembly - Aluminum / Nylon		822-019-001
	Seat assembly - Aluminum / Fluorocarbon		822-040-000
	Seat assembly - 316SS Holder / Nitrile		822-020-000
	Seat assembly - 316SS / Nylon		822-020-001
	Seat assembly - 316SS / Fluorocarbon		822-040-001
29	Orifice - Aluminum - 3⁄32"	1	688-013-005
	Orifice - Aluminum - 1⁄8"		688-013-004
	Orifice - Aluminum - 3⁄16"		688-013-003
	Orifice - Aluminum - 1⁄4"		688-013-002
	Orifice - Aluminum - 3⁄8"		688-013-001
	Orifice - Aluminum - 1⁄2"		688-013-000
	Orifice - 316SS - 3⁄32"		688-014-005
	Orifice - 316SS - 1⁄8"		688-014-004
	Orifice - 316SS - 3⁄16"		688-014-003
	Orifice - 316SS - 1⁄4"		688-014-002
	Orifice - 316SS - 3⁄8"		688-014-001
	Orifice - 316SS - 1⁄2"		688-014-000
30	Iron Body - 3⁄4 NPT	1	664-280-000
	Iron Body - 1 NPT		664-280-001
	Iron Body - 2 NPT		664-282-000
	Steel Body - 3⁄4 NPT		664-281-000
	Steel Body - 1 NPT		664-281-001
	Steel Body - 2 NPT		664-283-000
	LCC Body - 3⁄4 NPT		664-325-000
	LCC Body - 1 NPT LCC		664-325-001
	LCC Body - 2 NPT LCC		664-326-000
	Stainless Body - 3⁄4 NPT		664-394-000
	Stainless Body - 1 NPT		664-394-001
	Stainless Body - 2 NPT		664-395-000
	Steel - 3⁄4 NPT Socket Weld		664-356-000
	Steel - 1 NPT Socket Weld		664-358-000
	Steel - 2 NPT Socket Weld		664-359-000
	Stainless - 3/4" Socket Weld		664-422-000
	Stainless - 1" Socket Weld		664-423-000
	Stainless - 2" Socket Weld		664-424-000
32	Diaphragm Spacer (P627H or P627HM only)	1	654-167-000
33	O-ring, Spacer, Nitrile (P627H or P627HM only)	1	649-279-000
	O-ring, Spacer, Fluorocarbon (P627H or P627HM only)		649-279-001
34	O-ring, Throat Block, Nitrile	2	649-281-000
	O-ring, Throat Block, Fluorocarbon		649-281-001
35	Throat Block (P627M or P627HM only)	1	626-081-000
36	Backup Ring, Throat Block	2	644-048-000
37	Steel Build Bolt / 1" Aluminum Housing	2	648-466-001
	Steel Build Bolt / 2" Aluminum Housing		648-466-003
	Steel Build Bolt / Steel Housing		648-467-001
	Stainless Build Bolt / 1" Aluminum Housing		648-548-001
	Stainless Build Bolt / 2" Aluminum Housing		648-548-003
	Stainless Build Bolt / Steel or SS Housing		648-549-000
38	Spring Guide, Lower (P627H & P627HM only)	1	637-307-000
40	Name Plate Drive Screw (not shown)	2	648-464-000
41	NACE Tag (not shown)	1	632-503-000

P627 Parts

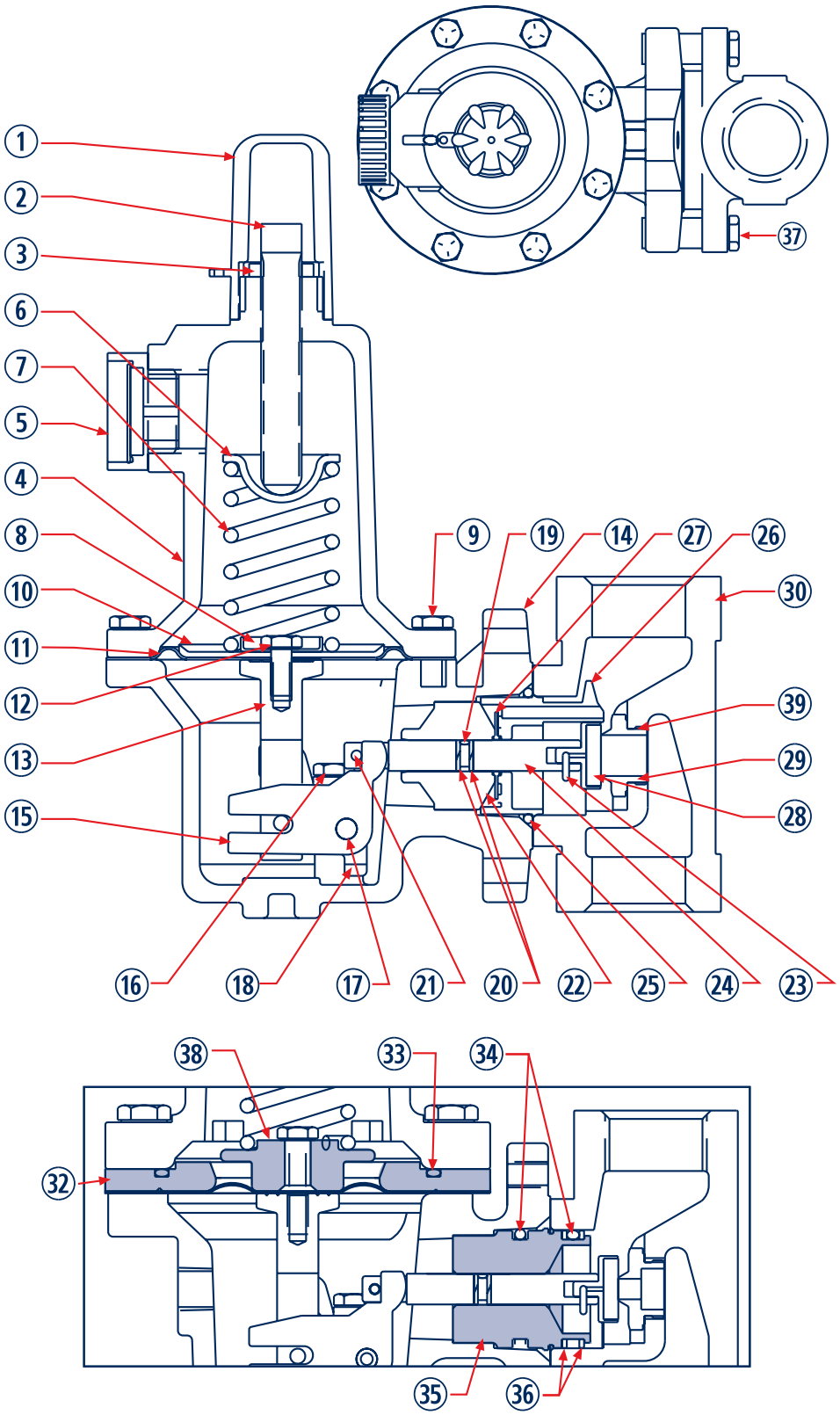
1
2
3
6
7
5
4
8
10
11
12
13
15
16
18
17
21
20
22
25
24
23
9
19
14
27
26
30
39
29
28
37
38
33
34
32
35
36

P627 / R627 Dimensions

Aluminum/Cast Ductile Iron Units

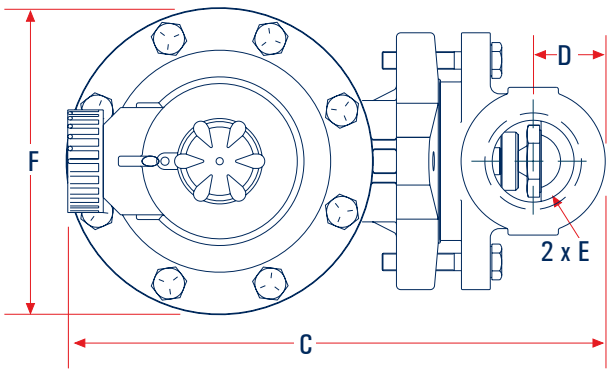

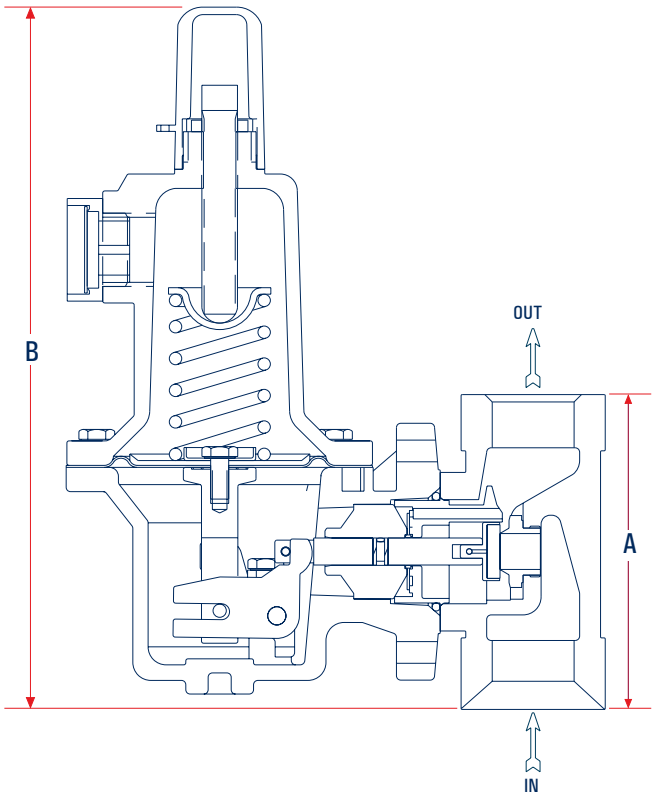

Type	Body Size		A	B	C	D	E	F*
627 & 627M	3/4"	mm	104	243	190	26	3/4"	108
		inches	4.08	9.54	7.46	1.0		4.25
	1"	mm	104	243	190	26	1"	108
		inches	4.08	9.54	7.46	1.0		4.25
	2"	mm	127	256	218	43	2"	108
		inches	5.0	10.06	8.56	1.69		4.25
627H & 627HM	3/4"	mm	104	250	194	26	3/4"	120
		inches	4.08	9.82	7.62	1.0		4.70
	1"	mm	104	250	194	26	1"	120
		inches	4.08	9.82	7.62	1.0		4.70
	2"	mm	127	265	224	43	2"	120
		inches	5.0	10.44	8.80	1.69		4.70

*F Dimensions for steel P627 and P627M - 120 mm/4.7 inches

P627H

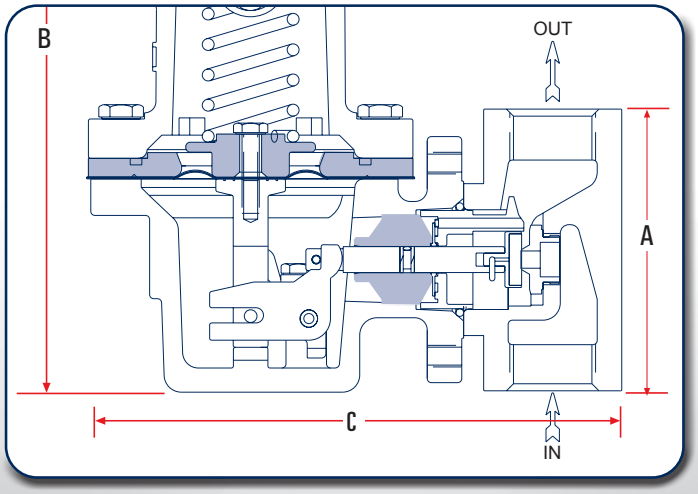

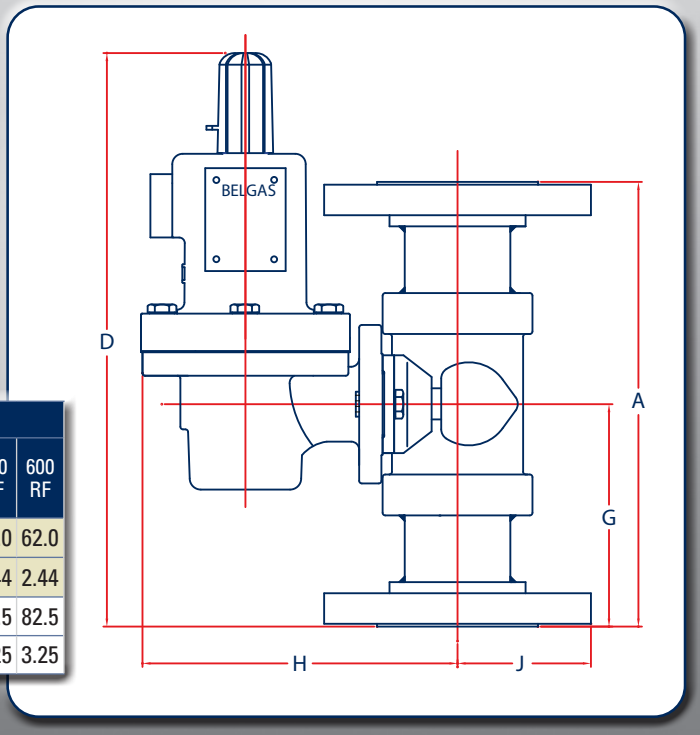

P627 / R627 Dimensions

Flange Units

Type	Body Size		A			D			G			H	J		
			150 RF	300 RF	600 RF	150 RF	300 RF	600 RF	150 RF	300 RF	600 RF	Steel	150 RF	300 RF	600 RF
P627 & R627 Flanged Units	1"	mm	184	197	210	286	292	298	91.9	98.6	105	172	53.8	62.0	62.0
		in.	7.25	7.75	8.25	11.24	11.5	11.75	3.62	3.88	4.12	6.75	2.12	2.44	2.44
	2"	mm	254	267	286	321	327	337	127	133	143	181	76.2	82.5	82.5
		in.	10	10.5	11.25	12.63	12.88	13.25	5	5.25	5.62	7.12	3	3.25	3.25

R627 High Flow Gas Regulator with Internal Relief

The R627 Relieving Regulator has an internal relief valve that provides protection against over pressurization. As output pressure builds up above the start-to-discharge point the relief seat disengages from the diaphragm and the excess pressure is relieved through the bonnet vent port. As a result, the output pressure reduces and returns to the initial setpoint. The relief seat then reseats against the diaphragm. The action of the R627 internal relief valve in many cases eliminates the need for an external relief valve. The R627 is available in spring ranges from 5-20 PSIG up to 70-150 PSIG.

The R627 contains a relief indicator that is attached to the R627 vent assembly. The indicator pops off the vent when the relief valve opens and serves as a visual indicator that the relief valve has operated.

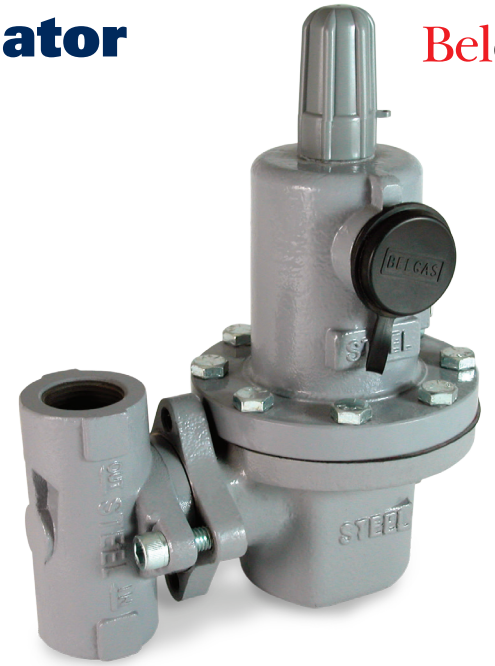

Applications

- Farm Tap
- Gas Gathering
- City Gates
- District Gates

Materials of Construction

Body, Bonnet, Diaphragm Case	
Options	Steel Body, Bonnet & Diaphragm Case
	Cast Ductile Iron Body / Aluminum Bonnet & Diaphragm Case
	Steel Body / Aluminum Bonnet & Diaphragm Case (NACE only)
	Steel Casing / LCC Body
	Aluminum Casing / LCC Body
	CF8M Stainless Steel Body, Bonnet & Diaphragm Case
Diaphragm	
Option	Nitrile (low pressure)
Seat	
Options	Nitrile
	Nylon
	Fluorocarbon
Orifice	

Specifications

Maximum Inlet Body Pressure		
Nylon Seat	2000 PSIG	Steel
	1000 PSIG	Ductile Iron
	1485 PSIG	Flanged Steel
Nitrile Seat	1000 PSIG	All Units
Fluorocarbon Seat	300 PSIG	All Units
Outlet	5–150 PSIG	
Body Sizes	3/4 NPT	
	1 NPT	
	2 NPT	
Orifice Sizes	3/32"	
	1/8"	
	3/16"	
	1/4"	
	3/8"	
	1/2"	
	Outlet Range	Flow Range*
Output	5–20 PSIG	300–43,000
	15–40 PSIG	1,000–71,000
	35–80 PSIG	1,200–142,000
	10–95 PSIG	1,000–150,000
	70–150 PSIG	2,500–172,000
	* (SCFH of 0.6 S.G. Natural Gas)	
Temperature Range	–20° to 180°F	(–29° to 82°C)
Weight Approximate		
1"	5.3 lbs	2.39 kg
2"	8.8 lbs	3.96 kg

Maximum Bonnet and Diaphragm Casing Pressure	Spring & Diaphragm Casing Style	R627		R627M	
		PSIG	BAR	PSIG	BAR
Maximum pressure to spring and diaphragm casing to prevent leak to atmosphere (internal parts damage may occur).	Die Cast Aluminum	250	17.2	250	250
	Steel / SS	250	17.2	250	17.2
Maximum pressure to spring and diaphragm casings to prevent burst of casings during abnormal operation (leak to atmosphere and internal parts may occur).	Die Cast Aluminum	375	25.9	375	375
	Steel / SS	1200	82.7	1200	82.7
Maximum diaphragm casing overpressure to prevent damage to internal parts.	All	120	8.3	120	8.3

R627 Regulator Rebuild Kits

	Kit Includes	Part Number
R627 Nitrile	Nitrile diaphragms (2), Nitrile valve disk, O-rings, back-up rings, and retaining pin	971-R62-700

	Kit Includes	Part Number
R627 Nitrile NACE	Nitrile diaphragms (2), SS Nitrile valve disk, O-rings, back-up rings, and retaining pin	971-R62-7N0
R627 Nylon NACE	Nitrile diaphragms (2), SS Nylon valve disk, O-rings, back-up rings, and retaining pin	971-R62-7N1

R627 Part Matrix

R627							**1**				
									Port Size		
	06								3⁄4"		
	08								1"		
	16								2"		
									Spring Range		
									PSIG	BAR	
		020							5 - 20	0.34 - 1.4	NOTE: Nitrile or FKM is required for 5-20, 15-40 and 10-95 PSIG. Nylon is recommended only up to 1/8" orifice for these pressure ranges.
		040							15 - 40	1 - 2.8	
		080							35 - 80	2.4 - 5.5	
		095							10 - 95	0.7 - 6.6	
		150							70 - 150	4.8 - 10.3	
									Special Adders		
			0						None		
			2						Monitor		
			A						150 #RF*		*Steel, LCC Steel or Stainless Steel Bodies Only
			B						300 #RF*		
			C						600 #RF*		
			D						Socket Weld*		
			E						900 #RTJ*		
			W						150 #RF & Monitor*		
			X						300 #RF & Monitor*		
			Y						600 #RF & Monitor*		
			Z						Socket Weld & Monitor*		
									Versions		
				0					Standard		
				N					NACE		
				F					NACE & Fluorocarbon		
				T					Stainless Trim		
									Orifice		
					0				3⁄32"		
					2				1⁄8"		
					3				3⁄16"		
					4				1⁄4"		
					6				3⁄8"		
					8				1⁄2"		
									Seat Material		
						0			Nitrile		NOTE: Nitrile or FKM is required for 5-20, 15-40 and 10-95 PSIG. Nylon is recommended only up to 1/8" orifice for these pressure ranges.
						1			Nylon		
						2			Fluorocarbon		
							1				
									Case / Body		
								0	Aluminum / Iron		
								1	Steel / Steel		
								2	Aluminum / Steel		
								6	Aluminum / LCC Steel		
								7	Steel / LCC Steel		
								8	Steel / Iron		
								9	Stainless / Stainless		

R627 Relief Performance - 1/4" Orifice

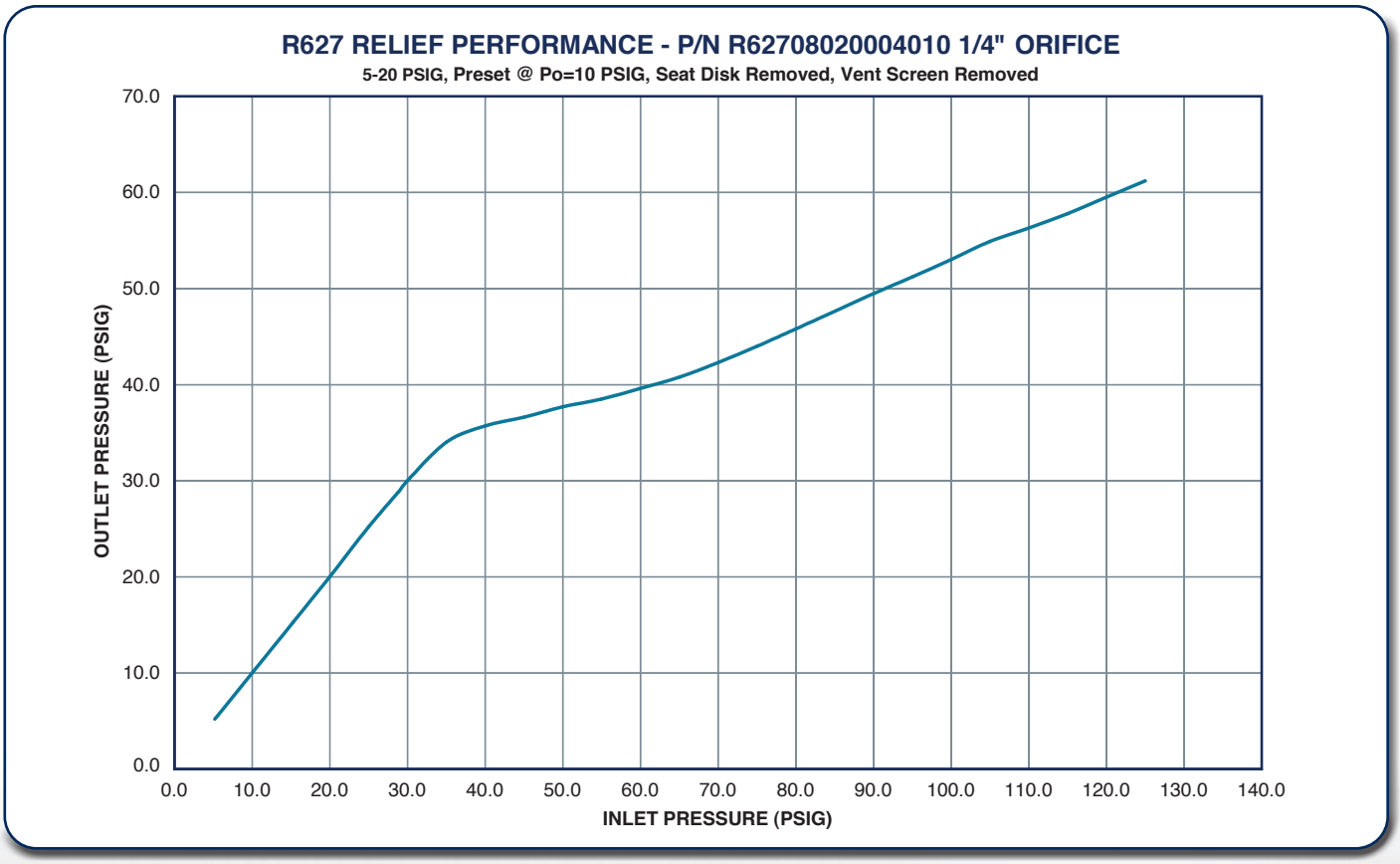

R627 Internal Relief Performance[1]

Outlet Pressure Spring Range	Outlet Pressure Setting		Maximum Allowable Down-stream Pressure		Maximum Inlet Pressure to Keep Maximum Allowable Downstream Pressure from Being Exceeded[2] R627 Port Diameter, inches					
	PSIG	BAR	PSIG	BAR	3/32	1/8	3/16	1/4	3/8	1/2
5 to 20 PSIG[3] (.03 to 1.4 BAR)	10	0.7	60	4.1	1250	740	320	190	95	75
			100	6.9	2000	1500	620	390	180	130
			125	8.6	2000	1900	830	480	220	160
			175	12.1	2000	2000	1100	670	320	220
			200	13.8	2000	2000	1300	770	360	260
			250	17.2	2000	2000	1600	960	450	320
	15	1.0	60	4.1	1000	620	260	170	90	70
			100	6.9	2000	1400	610	370	170	130
			125	8.6	2000	1900	810	480	220	160
			175	12.1	2000	2000	1100	670	320	220
			200	13.8	2000	2000	1300	770	360	260
			250	17.2	2000	2000	1600	960	450	320
	20	1.4	60	4.1	850	490	210	130	80	65
			100	6.9	2000	1300	600	360	170	120
			125	8.6	2000	1800	800	480	220	160
			175	12.1	2000	2000	1100	670	320	220
			200	13.8	2000	2000	1300	770	360	260
			250	17.2	2000	2000	1600	960	450	320

Outlet Pressure Spring Range	Outlet Pressure Setting		Maximum Allowable Down-stream Pressure		Maximum Inlet Pressure to Keep Maximum Allowable Downstream Pressure from Being Exceeded[2] R627 Port Diameter, inches					
	PSIG	BAR	PSIG	BAR	3/32	1/8	3/16	1/4	3/8	1/2
15 to 40 PSIG (1.0 to 2.8 BAR)	15	1.0	60	4.1	1000	380	210	130	80	65
			100	6.9	2000	1300	590	350	170	120
			125	8.6	2000	1800	800	470	220	160
			175	12.1	2000	2000	1100	640	320	220
			200	13.8	2000	2000	1300	780	370	260
			250	17.2	2000	2000	1600	960	450	320
	20	1.4	60	4.1	630	200	150	100	70	65
			100	6.9	2000	1200	550	330	160	120
			125	8.6	2000	1700	760	450	210	160
			175	12.1	2000	2000	1100	630	320	220
			200	13.8	2000	2000	1300	770	360	260
			250	17.2	2000	2000	1600	960	450	320
	30	2.1	100	6.9	2000	950	450	260	140	110
			125	8.6	2000	1500	670	400	190	150
			175	12.1	2000	2000	1000	610	300	220
			200	13.8	2000	2000	1200	760	360	260
			250	17.2	2000	2000	1600	970	450	320
	40	2.8	100	6.9	1500	700	330	200	120	108
			125	8.62	2000	1300	560	340	180	140
			175	12.1	2000	1800	1000	550	290	220
			200	13.8	2000	2000	1200	730	350	250
			250	17.2	2000	2000	1600	970	460	320

1. The internal relief performance values are obtained by removing the disk assembly.
2. For inlet pressure in excess of 1000 PSIG (69.0 BAR) refer to the maximum body and disk pressure ratings in the specifications section.
3. For pressure settings under 10 PSIG (0.69 BAR) inlet pressure should be limited to approximately 100 PSIG (6.90 BAR) so the set point adjustment can be obtained.
4. - Shaded areas indicate maximum inlet pressures allowed during system failure only.

R627 Internal Relief Performance[1]

Outlet Pressure Spring Range	Outlet Pressure Setting		Maximum Allowable Down-stream Pressure		Maximum Inlet Pressure to Keep Maximum Allowable Downstream Pressure from Being Exceeded[2] R627 Port Diameter, inches					
	PSIG	BAR	PSIG	BAR	3/32	1/8	3/16	1/4	3/8	1/2
35 to 80 PSIG (2.4 to 5.5 BAR)	40	2.8	125	8.6	2000	1100	500	300	170	140
			150	10.3	2000	1600	750	440	230	180
			175	12.1	2000	2000	980	580	290	220
			200	13.8	2000	2000	1200	720	340	250
			250	17.2	2000	2000	1600	940	450	320
	50	3.4	125	8.6	1400	820	400	230	150	140
			150	10.3	2000	1400	650	370	210	170
			175	12.1	2000	1900	700	530	270	210
			200	13.8	2000	2000	1100	670	330	240
			250	17.2	2000	2000	1500	920	430	320
	60	4.1	125	8.6	900	450	270	190	140	130
			150	10.3	1700	1100	540	300	190	160
			175	12.1	2000	1700	780	470	250	200
			200	13.8	2000	2000	1000	610	310	230
			250	17.2	2000	2000	1400	880	420	310
	70	4.8	150	10.3	1200	850	430	250	170	160
			175	12.1	2000	1400	670	400	230	190
			200	13.8	2000	2000	920	550	280	230
			250	17.2	2000	2000	1300	830	400	310
	80	5.5	150	10.3	800	500	300	200	160	150
			175	12.1	1500	1200	550	330	210	190
			200	13.8	2000	1700	800	480	270	220
			250	17.2	2000	2000	1200	770	390	300
70 to 150 PSIG (4.8 to 10.3 BAR)	70	4.8	175	12.1	1900	600	400	260	200	175
			200	13.8	2000	1200	630	380	250	210
			250	17.2	2000	2000	1100	680	360	290
	80	5.5	175	12.1	1400	250	240	200	190	175
			200	13.8	2000	960	250	330	240	210
			250	17.2	2000	2000	1000	620	350	280
	100	6.9	200	13.8	1500	250	240	230	210	210
			250	17.2	2000	1600	770	520	320	270
	125	8.6	250	17.2	2000	1000	500	390	290	260
	150	10.3	250	17.2	1200	260	260	260	260	260

1. The internal relief performance values are obtained by removing the disk assembly.
2. For inlet pressure in excess of 1000 PSIG (69.0 BAR) refer to the maximum body and disk pressure ratings in the specifications section.
3. For pressure settings under 10 PSIG (0.69 BAR) inlet pressure should be limited to approximately 100 PSIG (6.90 BAR) so the set point adjustment can be obtained.
4. - Shaded areas indicate maximum inlet pressures allowed during system failure only.

R627 Capacities for 3/4-inch Body Size[1]

Outlet Pressure Spring Range	Outlet Pressure Setting		Inlet Pressure		Capacities in SCFH (Nm^3/h) of 0.6 Specific Gravity Natural Gas **3/4" Body Size** Orifice Size, Inches					
	PSIG	BAR	PSIG	BAR	3/32	1/8	3/16	1/4	3/8	1/2
5 to 20 PSIG[2] (.03 to 1.4 BAR)	5	0.3	10	0.7	170	320	710	1050	1500	1850
			15	1.0	240	330	810	1290	2100	2850
			20	1.4	290	460	1090	1750	2750	3850
			30	2.1	380	610	1470	2490	3600	4800
			60	4.1	640	1170	2460	3690	5270	6120
			75	5.2	770	1410	2880	4150	5760	6900
			100	6.9	990	1690	3540	4790	6200	7600
	10	0.7	15	1.0	210	320	800	1290	2100	2820
			20	1.4	280	450	1070	1740	2700	3800
			30	2.1	380	610	1470	2430	3550	4780
			60	4.1	640	1170	2460	3690	5270	6120
			75	5.2	770	1410	2880	4150	5760	6900
			100	6.9	990	1690	3540	4790	6200	7600
			150	10.3	1420	2430	4000	5680	6250	7630
			200	13.8	1850	3070	4200	6200	6380	7680
			300	20.7	2700	3970	4270	6250	6500	
			500	34.5	4010	4240	5640	6520		
			750	51.7	4400	5120	6400			
			1000	69.0	4450	6220				
			1250	86.2	4540					
			1500	103	4880					
			1750	121	5230					
			2000	138	5900					
	20	1.4	30	2.1	350	590	1390	2480	4350	4970
			50	3.5	550	980	2240	4000	7450	8000
			60	4.1	640	1170	2610	4680	7800	8900
			100	6.9	990	1800	3980	6700	9750	10400
			150	10.3	1420	2580	5600	8790	10000	10800
			200	13.8	1850	3370	7050	9000	10200	10800
			300	20.7	2700	4910	7300	9500	10500	
			500	34.5	4400	5200	7400	9760		
			750	51.7	6600	5360	8870			
			1000	69.0	7300	6500				
			1250	86.2	7500					
			1500	130	7800					
			1750	121	8400					
			2000	138	8600					
15 to 40 PSIG (1.0 to 2.8 BAR)	40	2.8	60	4.1	610	1090	2270	4230	8100	9100
			75	5.2	760	1370	3080	5330	10300	11600
			100	6.9	990	1790	4070	6840	11900	13400
			150	10.3	1420	2580	5850	9320	13500	13800
			200	13.8	1850	3370	7630	11000	16300	17100
			300	20.7	2700	4910	11200	14700	17800	
			500	34.5	4400	8090	14500	14800		
			750	51.7	6600	10800	14800	14900		
			1000	69.0	8700	13100	16300			
			1250	86.2	11000	13800				
			1500	130	12000	14000				
			1750	121	13000					
			2000	138	14000					
35 to 80 PSIG (2.4 to 5.5 BAR)	60	4.1	75	5.2	700	1230	2760	4700	8170	12600
			100	6.9	970	1740	3910	6690	11900	14400
			150	10.3	1420	2580	5850	9740	15700	18700
			200	13.8	1850	3370	7630	12400	18400	21200
			300	20.7	2700	4910	11200	17700	20200	
			500	34.5	4400	8090	18300	20000		
			750	51.7	6600	12000	18900	21400		
			1000	69.0	8700	16000	19000			
			1250	86.2	11000	18700				
			1500	130	13000	19000				
			1750	121	15000	20000				
			2000	138	17000					

Table Continued

R627 Capacities for 3/4-inch Body Size[1]

Outlet Pressure Spring Range	Outlet Pressure Setting		Inlet Pressure		Capacities in SCFH (Nm³/h) of 0.6 Specific Gravity Natural Gas **3/4" Body Size** Orifice Size, Inches					
	PSIG	BAR	PSIG	BAR	3/32	1/8	3/16	1/4	3/8	1/2
35 to 80 PSIG (2.4 to 5.5 BAR)	80	5.5	100	6.90	900	1630	3570	6490	12000	17200
			150	10.3	1410	2580	5780	10500	18900	25000
			200	13.8	1850	3370	7630	13700	23000	29000
			300	20.7	2700	4910	11200	20100	26000	
			500	34.5	4400	8090	18300	29000		
			750	51.7	6600	12000	23100	30900		
			1000	69.0	8700	16000	27400			
			1250	86.2	11000	19000				
			1500	130	13000	22000				
			1750	121	15000	25000				
			2000	138	17000					
70 to 150 PSIG (4.8 to 10.3 BAR)	100	6.9	150	10.3	1170	2510	5540	8310	15500	20300
			200	13.8	1850	3370	7630	12000	20100	25700
			300	20.7	2700	4910	11200	18200		
			500	34.5	4400	8090	18300			
			750	51.7	6600	12000				
			1000	69.0	8700	16000				
			1250	86.2	11000					
			1500	130	13000					
			1750	121	15000					
			2000	138	17000					
	125	8.6	150	10.3	1250	2330	5090	9130	15700	20800
			200	13.8	1830	3320	7360	13160	22400	28600
			300	20.7	2700	4910	11200	19700		
			500	34.5	4400	8090	18300			
			750	51.7	6600	12000				
			1000	69.0	8700	16000				
			1250	86.2	11000					
			1500	130	13000					
			1750	121	15000					
			2000	138	17000					
	150	10.3	200	13.8	1760	3200	7020	12500	21400	30600
			300	20.7	2700	4910	11200	17200		
			500	34.5	4400	8090	18300			
			750	51.7	6600	12000				
			1000	69.0	8700	16000				
			1250	86.2	11000					
			1500	130	13000					
			1750	121	15000					
			2000	138	17000					

1. Capacity is based on 20% droop unless otherwise noted below.
2. For pressure setting under 10 PSIG (06.9 BAR) inlet pressure should be limited to approximately 100 PSIG (6.90 BAR) so that setpoint adjustment can be obtained.
3. ▭ - Blank areas indicate where maximum operating inlet pressure for a given orifice is exceeded.

R627 Capacities for 1 and 2 Inch Body Sizes[1]

Outlet Pressure Spring Range	Outlet Pressure Setting		Inlet Pressure		Capacities in SCFH (Nm³/h) of 0.6 Specific Gravity Natural Gas **1 & 2" Body Size** Orifice Size, Inches					
	PSIG	BAR	PSIG	BAR	3/32	1/8	3/16	1/4	3/8	1/2
5 to 20 PSIG[2] (.03 to 1.4 BAR)	5	0.3	10	0.7	170	330	710	1080	2000	2150
			15	1.0	240	390	890	1500	2350	3000
			20	1.4	290	500	1160	1900	2750	3900
			30	2.0	380	690	1500	2500	3600	4900
			60	4.1	640	1170	2460	3690	5650	6900
			75	5.2	770	1410	2880	4150	6450	7490
			100	6.9	990	1800	3540	5790	7520	8150
	10	0.7	15	1.0	210	390	840	1480	2300	2930
			20	1.4	280	500	1100	1880	2700	3830
			30	2.0	380	690	1500	2460	3550	4840
			60	4.1	640	1170	2460	3690	5650	6900
			75	5.2	770	1410	2880	4150	6450	7490
			100	6.9	990	1800	3540	4790	7520	8150
			150	10.3	1420	2580	4660	5680	9980	10800
			200	13.8	1850	3370	5620	6360	11000	12900
			300	20.7	2700	4880	6890	7780	13600	
			500	34.5	4400	6720	8570	11600		
			750	51.7	5400	8850	9000			
			1000	69.0	5800	9500				
			1250	86.2	6300					
			1500	103	6600					
			1750	121	6800					
			2000	138	7600					
	20	1.4	30	2.07	350	600	1390	2580	4350	6290
			50	3.45	550	1000	2250	4090	7600	8000
			60	4.14	640	1170	2630	4750	7800	10600
			100	6.90	990	1800	4070	7310	10800	13400
			150	10.3	1420	2580	5720	10300	13500	14000
			200	13.8	1850	3370	7050	10500	14000	14000
			300	20.7	2700	4910	9250	10800	14900	
			500	34.5	4400	7830	11800	13000		
			750	51.7	6600	9000	12000			
			1000	69.0	8700	9660				
			1250	86.2	10000					
			1500	103	10400					
			1750	121	12000					
			2000	138	14000					
15 to 40 PSIG (1.0 to 2.8 BAR)	40	2.8	60	4.1	610	1090	2430	4510	9200	9400
			75	5.2	760	1370	3080	5640	10800	16300
			100	6.9	990	1790	4070	7310	13500	17600
			150	10.3	1420	2580	5850	10500	18000	22200
			200	13.8	1850	3370	7630	11000	21400	24600
			300	20.7	2700	4910	11200	14900	24400	
			500	34.5	4400	8090	16300	21800		
			750	51.7	6600	12000	20200	23600		
			1000	69.0	8700	16000	23200			
			1250	86.2	11000	19000				
			1500	103	13000	21000				
			1750	121	15000					
			2000	138	17000					
35 to 80 PSIG (2.4 to 5.5 BAR)	60	4.1	75	5.2	700	1230	2760	4860	8600	12800
			100	6.9	970	1740	3910	7000	12500	16700
			150	10.3	1420	2580	5850	10500	16800	2300
			200	13.8	1850	3370	7630	13700	20900	27700
			300	20.7	2700	4910	11200	20100	28100	
			500	34.5	4400	8090	18300	28500		
			750	51.7	6600	12000	22800	29500		
			1000	69.0	8700	16000	26800			
			1250	86.2	11000	19000				
			1500	103	13000	22000				
			1750	121	15000	25000				
			2000	138	17000					

Table Continued

1. Capacity is based on 20% droop unless otherwise noted below.
2. For pressure setting under 10 PSIG (06.9 BAR) inlet pressure should be limited to approximately 100 PSIF (6.90 BAR) so that setpoint adjustment can be obtained.
3. ▭ - Blank areas indicate where maximum operating inlet pressure for a given orifice is exceeded.

R627 Capacities for 1 and 2 Inch Body Sizes[1]

Outlet Pressure Spring Range	Outlet Pressure Setting		Inlet Pressure		Capacities in SCFH (Nm³/h) of 0.6 Specific Gravity Natural Gas **1 & 2" Body Size** Orifice Size, Inches					
	PSIG	BAR	PSIG	BAR	3/32	1/8	3/16	1/4	3/8	1/2
35 to 80 PSIG (2.4 to 5.5 BAR)	80	5.5	100	6.9	900	1630	3570	6650	12000	17400
			150	10.3	1410	2580	5750	10500	20100	26000
			200	13.8	1850	3370	7630	13700	25100	31800
			300	20.7	2700	4910	11200	20100	32600	
			500	34.5	4400	8090	18300	30300		
			750	51.7	6600	12000	27200	37400		
			1000	69.0	8700	16000	33300			
			1250	86.2	11000	19000				
			1500	103	13000	22000				
			1750	121	15000	25000				
			2000	138	17000					
70 to 150 PSIG (4.8 to 10.3 BAR)	100	6.9	150	10.3	1170	2510	5540	8310	15500	20300
			200	13.8	1850	3370	7630	12000	20100	26700
			300	20.7	2700	4910	11200	18200		
			500	34.5	4400	8090	18300			
			750	51.7	6600	12000				
			1000	69.0	8700	16000				
			1250	86.2	11000					
			1500	103	13000					
			1750	121	15000					
			2000	138	17000					
	125	8.6	150	10.3	1250	2330	5090	9470	15700	20800
			200	13.8	1830	3320	7360	13400	23600	31300
			300	20.7	2700	4910	11200	19700		
			500	34.5	4400	8090	18300			
			750	51.7	6600	12000				
			1000	69.0	8700	16000				
			1250	86.2	11000					
			1500	103	13000					
			1750	121	15000					
			2000	138	17000					
	150	10.3	200	13.8	1760	3200	7020	12900	21400	33300
			300	20.7	2700	4910	11200	17200		
			500	34.5	4400	8090	18300			
			750	51.7	6600	12000				
			1000	69.0	8700	16000				
			1250	86.2	11000					
			1500	103	13000					
			1750	121	15000					
			2000	138	17000					

1. Capacity is based on 20% droop unless otherwise noted below.
▭ - Blank areas indicate where maximum operating inlet pressure for a given orifice is exceeded.

R627 Parts

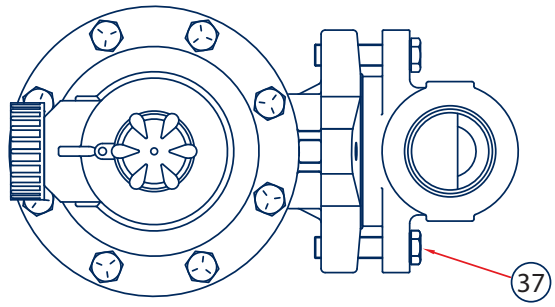

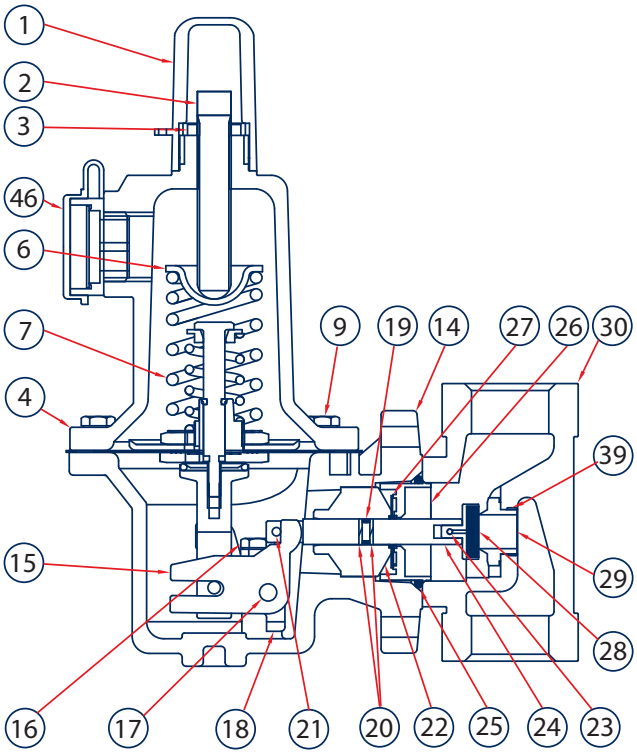

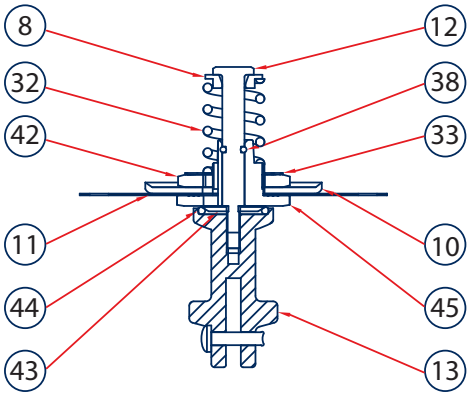

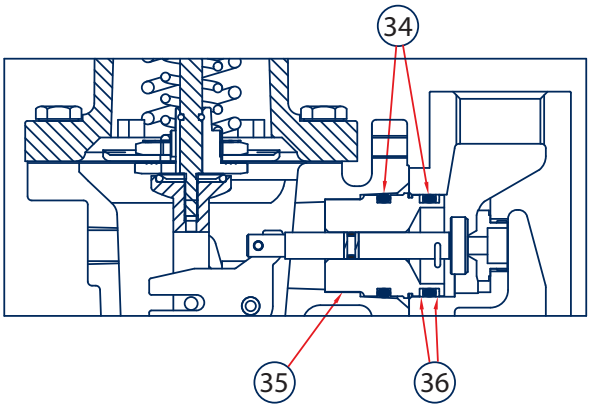

R627 Parts

Item	Description	Qty.	Part Number
1	Cover Adj. Screw, Plastic	1	610-053-000
2	Adjustment Screw	1	648-520-000
3	Locknut	1	634-154-000
4	Bonnet, R627 - Aluminum	1	604-210-000
	Bonnet, R627M - Steel		604-211-000
	Bonnet, R627 - Stainless		604-266-000
5	Vent Screw Assembly	1	836-005-000
6	Spring Guide, Upper	1	626-079-000
7	Range Spring	1	
	5-20 PSIG–Yellow		655-661-000
	15-40 PSIG–Green		655-661-001
	35-80 PSIG & 10-95–PSIG Blue		655-661-002
	70-150 PSIG–Red		655-661-003
	140-250 PSIG–Blue		655-661-002
	240-500 PSIG–Red		655-661-003
8	Spring Guide, Lower (R627 or R627M only)	1	626-101-000
9	Al Spring Case Screws - R627	8	648-466-000
	Stl Spring Case Screws - R627 or R627M		648-467-003
	SS Spring Case Screws - R627 or R627M		648-550-000
10	Diaphragm Piston (R627 or R627M only)	1	637-322-000
11	Diaphragm R627 & R627M Aluminum / Iron Case	1	618-079-000
	Diaphragm R627 & R627M Steel Case		618-080-000
	Diaphragm R627 & R627M Al / Iron (Fluoro)		618-080-001
	Diaphragm R627 & R627M Steel (Fluoro)		618-079-001
12	Diaphragm Retainer	1	648-521-000
13	Post, Pusher R627 & R627M Assy	1	827-011-000
14	Diaphragm Case R627 - Aluminum	1	629-202-000
	Diaphragm Case R627 - Steel		629-203-000
	Diaphragm Case R627M - Steel		629-204-000
	Diaphragm Case, Aluminum (for Steel Body)		629-215-000
	Diaphragm Case R627 - Stainless		629-242-000
	Diaphragm Case R627M - Stainless		629-243-000
15	Lever	1	703-004-000
	Lever, NACE		703-005-000
16	Lever Screw	2	648-466-002
	Lever Screw, NACE		648-474-000
17	Pin, Lever	1	635-053-000
	Pin, Lever, NACE		635-057-000
18	Lever Retainer	1	643-192-000
	Lever Retainer, NACE		643-194-000
19	Stem O-ring, Nitrile	1	649-000-003
	Stem O-ring, Fluorocarbon		649-000-343
20	Stem Backup Ring, TFE	2	644-047-000
21	Pin, Groove	1	635-054-000
	Pin, Groove NACE		635-058-000
22	Stem Guide	1	626-083-000
23	Pin Clip	1	635-055-000
	Pin Clip NACE	1	635-056-000
24	Stem, 316SS	1	689-005-000
25	Diaphragm Case O-ring, Nitrile (R627 & R627H)	1	649-280-000
	Diaphragm Case O-ring, Fluorocarbon (R627 & R627H)		649-280-001
26	Boost Body R627	1	686-004-000
27	Stabilizer, Nitrile R627	1	649-278-000
	Stabilizer, Fluorocarbon R627		649-278-001

Item	Description	Qty.	Part Number
28	Seat assembly - Aluminum holder/nitrile disk	1	822-019-000
	Seat assembly - Aluminum/nylon		822-019-001
	Seat assembly - Aluminum/Fluorocarbon		822-040-000
	Seat assembly - 316SS Holder/Nitrile		822-020-000
	Seat assembly - 316SS/Nylon		822-020-001
	Seat assembly - 316SS/Fluorocarbon		822-040-001
29	Orifice - Aluminum - 3⁄32"	1	688-013-005
	Orifice - Aluminum - 1⁄8"		688-013-004
	Orifice - Aluminum - 3⁄16"		688-013-003
	Orifice - Aluminum - 1⁄4"		688-013-002
	Orifice - Aluminum - 3⁄8"		688-013-001
	Orifice - Aluminum - 1⁄2"		688-013-000
	Orifice - 316SS - 3⁄32"		688-014-005
	Orifice - 316SS - 1⁄8"		688-014-004
	Orifice - 316SS - 3⁄16"		688-014-003
	Orifice - 316SS - 1⁄4"		688-014-002
	Orifice - 316SS - 3⁄8"		688-014-001
	Orifice - 316SS - 1⁄2"		688-014-000
30	Iron Body - 3⁄4 NPT	1	664-280-000
	Iron Body - 1 NPT		664-280-001
	Iron Body - 2 NPT		664-282-000
	Steel Body - 3⁄4 NPT		664-281-000
	Steel Body - 1 NPT		664-281-001
	Steel Body - 2 NPT		664-283-000
	LCC Body - 3⁄4 NPT		664-325-000
	LCC Body - 1 NPT LCC		664-325-001
	LCC Body - 2 NPT LCC		664-326-000
	Stainless Body - 3⁄4 NPT		664-394-000
	Stainless Body - 1 NPT		664-394-001
	Stainless Body - 2 NPT		664-395-000
	Steel - 3⁄4 NPT Socket Weld		664-356-000
	Steel - 1 NPT Socket Weld		664-358-000
	Steel - 2 NPT Socket Weld		664-359-000
	Stainless - 3/4" Socket Weld		664-422-000
	Stainless - 1" Socket Weld		664-423-000
	Stainless - 2" Socket Weld		664-424-000
31	Nameplate (not shown)	1	632-474-000
32	Relief Spring	1	655-709-000
33	Lower Spring Seat	1	626-102-000
34	O-ring, Throat Block, Nitrile	2	649-281-000
	O-ring, Throat Block, Fluorocarbon		649-281-001
35	Throat Block (R627M only)	1	626-081-000
36	Backup Ring, Throat Block	2	644-048-000
37	Build Screw, 3⁄4" & 1" Aluminum unit	2	648-466-001
	Build Screw 2" Aluminum unit		648-466-003
	Build Screw, all Steel Bodies		648-467-001
	Build Screw, all Stainless Bodies		648-549-000
38	O-ring, Nitrile	1	649-000-001
	O-ring, Fluorocarbon		649-000-226
40	Name Plate Drive Screw (not shown)	2	648-464-000
41	NACE Tag (not shown)	1	632-503-000
42	Diaphragm Connecting Nut	1	634-182-000
43	Relief Seal Retainer	1	643-198-000
44	Relief Seal O-ring, Nitrile	1	649-308-000
	Relief Seal O-ring, Fluorocarbon		649-308-001
45	Diaphragm Connector	1	650-150-000
46	Relief Cap	1	614-064-000

F627 High Flow Gas Regulator

The F627 pilot operated pressure reducing regulator provides superior performance when used in fixed-factor billing applications. The Type F627 includes a factory-installed PL81 pilot and has external registration that requires a downstream control line.

Features

- **Accurate for Pressure-Factor Measurement Applications** — Pilot action controls pressure to within
  ±1 percent of the absolute outlet pressure (PSIA) setting at full travel. This capability results in low-pressure variations over broad flow ranges and inlet pressure ranges.
- **Wide Range of Flow Capabilities** — A variety of body and orifice sizes are available.
- **Tight Shutoff Capability** — A flat disk of nitrile or fluorocarbon provides excellent shutoff capability.

Materials of Construction

F627 Main Regulator	
Body	Ductile Iron (Standard), Steel, LCC Steel
Spring Case and Diaphragm Case	Die Cast Aluminum (standard), or Steel
Orifice	Aluminum (Standard) or Stainless Steel
Disk Assembly	Aluminum (Standard) or Stainless Steel Holder with Nitrile Disk or Fluorocarbon Disk
O-rings and Diaphragm	Nitrile or Fluorocarbon
Tension Spring	Plated Steel
F627 Pilot Regulator	
Body	Aluminum
Spring Case	Aluminum
Diaphragm	Nylon Fabric Coated with Nitrile or Fluorocarbon
Valve Plug	Brass / Nitrile or Fluorocarbon
Stem Guide	Brass
Control Spring	Zinc Plated Steel
Valve Spring Plug	Aluminum
Pusher Post and Valve Plug Spring Seat	Aluminum
Diaphragm Plate, Spring Guide, and Adjusting Screw	Plated Steel

Minimum Pressure Differential

Actuator Spring	Color Code	Pilot Control Spring	
		5 to 35 PSIG (0.34 to 2.41 bar)	35 to 100 PSIG (0.34 to 2.41 bar)
High Differential	Silver	10 PSI (1.70 BAR)	10 PSI (1.70 BAR)
	Red	20 PSI (1.38 BAR)	20 PSI (1.38 BAR)

Specifications

Outlet Pressure Ranges		
Outlet	5 to 35 PSIG	0.34 to 2.41 BAR
	35 to 100 PSIG	2.41 to 6.90 BAR
Maximum Outlet (Casing) Pressure	250 PSIG	17.24 BAR
Maximum Inlet Pressure	250 PSIG (17.2 BAR) for all Type F627's EXCEPT 1/2" Orifice is 125 PSIG (8.62 BAR)	
Body Sizes	3⁄4 NPT (DN 20)	
	1 NPT (DN 25)	
	2 NPT (DN 50)	
Temperature Range	–20˚ to 180˚F	(–29˚ to 82˚C)
Weight Approximate		
NPT Body with Ductile Iron or Steel Casings	13 lbs	5.9 kg
NPT Body with Aluminum Casings	9.3 lbs	4.2 kg
Flanged Body with Ductile Iron Casings	18 lbs	8.16 kg

F627 Part Matrix

F627									
									Port Size
	06								3⁄4"
	08								1"
	16								2"
									Spring Range
									PSIG / BAR
		035							5 - 35 / .34 - 2.4
		100							35 - 100 / 2.4 - 6.9
									Special Adders
			0						None
			1						Filter & Inlet Tube to Pilot Supply
			A						150 #RF*
			B						300 #RF*
			C						600 #RF*
			D						Socket Weld*
			J						150 #RF* with Filter and Tube
			K						300 #RF* with Filter and Tube
			L						600 #RF* with Filter and Tube
			M						Socket Weld* with Filter and Tube
									Restrictor Code
				1					High Gain
				2					Medium Gain
				3					Low Gain
									Orifice Size
					2				3/8" X 1⁄8"
					4				3/8" X 1⁄4"
					6				3⁄8"
					8				1⁄2"
									Seat and Diaphragm Material
						0			Nitrile
						2			Fluorocarbon
									Trim
							1		Aluminum (Standard)
							T		Stainless Steel
									Casing Material
								0	Aluminum Casing / Iron Body
								1	Steel Casing / Steel Body
								2	Aluminum Casing / Steel Body
								6	Aluminum Casing / LCC Steel Body
								7	Steel Casing / LCC Steel Body
								8	Steel Casing / Iron Body

* Steel or LCC Steel Bodies Only

F627 Regulator Rebuild Kits

	Kit Includes	Part Number
F627 Nitrile **Standard Trim**	Nitrile diaphragms (2), Nitrile valve disk, O-rings, back-up rings, and retaining pin	971F62700
F627 Nitrile **Stainless Trim**	Nitrile diaphragms (2), Nitrile valve disk, O-rings, back-up rings, and retaining pin	971F62701
F627 Fluorocarbon **Standard Trim**	Fluorocarbon diaphragms (2), Fluorocarbon valve disk, O-rings, back-up rings, and retaining pin	971F62702

F627 Maximum Allowable Inlet Pressure and Pressure Differential

ORIFICE SIZE INCHES (mm)	HIGH DIFFERENTIAL TENSION SPRING, RED COLOR CODE	
	LP Pilot	HP Pilot
	Maximum Inlet and Differential Pressure, PSIG (BAR)	Maximum Inlet and Differential Pressure, PSIG (BAR)
3/8 x 1/8 (9.53 x 3.18)	250 (17.2)	250 (17.2)
3/8 x 1/4 (9.53 x 6.35)	250 (17.2)	250 (17.2)
3/8 (9.53)	250 (17.2)	250 (17.2)
1/2 (12.7)	125 (8.62)	125 (8.62)

F627 Specifications

ORIFICE SIZE		ALLOWABLE INLET PRESSURE RANGE FOR MAINTAINING OUTLET PRESSURE WITHIN 1% OF THE ABSOLUTE OUTLET PRESSURE SETTING[1]									
		5 PSIG (0.34 BAR)		30 PSIG (2.07 BAR)		40 PSIG (2.76 BAR)		60 PSIG (4.14 BAR)		100 PSIG (6.90 BAR)	
Inch	mm	PSIG	BAR	PSIG	BAR	PSIG	BAR	PSIG	BAR	PSIG	BAR
3/8 x 1/8	9.5 x 3.2	30 to 250	2.1 to 6.9	55 to 250	3.8 to 17.2	65 to 250	4.5 to 17.2	85 to 250	5.9 to 17.2	125 to 250	8.6 to 17.2
3/8 x 1/4	9.5 x 6.4	30 to 250	2.1 to 6.9	55 to 250	3.8 to 17.2	65 to 250	4.5 to 17.2	85 to 250	5.9 to 17.2	125 to 250	8.6 to 17.2
3/8	9.5	30 to 250	2.1 to 6.9	55 to 250	3.8 to 17.2	65 to 250	4.5 to 17.2	85 to 250	5.9 to 17.2	125 to 250	8.6 to 17.2
1/2	12.7	25 to 125	1.7 to 8.6	50 to 125	3.4 to 8.6	60 to 125	4.1 to 8.6	80 to 125	5.5 to 8.6	120 to 125	8.3 to 8.6

1. For best performance, outlet pressure settings should be made using an inlet pressure that is midway between the highest and lowest expected inlet pressure.

F627 Flow Coefficients

Orifice Size		3/4-Inch Body			1-Inch Body			2-Inch Body		
Inch	mm	Wide-Open C_g for External Relief Sizing	C_v	C_1	Wide-Open C_g for External Relief Sizing	C_v	C_1	Wide-Open C_g for External Relief Sizing	C_v	C_1
3/8 x 1/8	3.2	12.5	0.43	29.1	12.5	0.45	29.4	12.5	0.45	29.2
3/8 x 1/4	6.4	50	1.63	30.6	50	1.70	29.3	52	1.70	31.3
3/8	9.5	108	3.00	36.1	108	3.70	31.6	115	3.40	33.9
1/2	12.7	190	4.80	39.0	190	5.30	35.9	200	5.30	39.9

Typical Performance Curve for 3/4-inch (DN 20) Type F627 Regulator

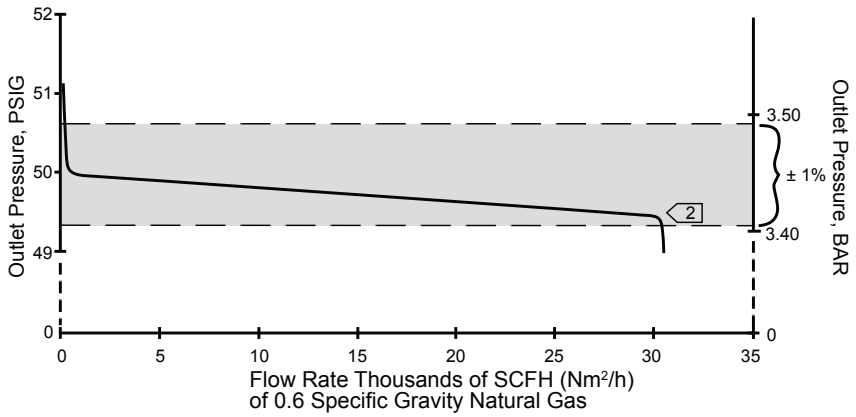

2 3/8-Inch (9.52 mm) Orifice.
(Red Color Code) Actuator Spring 35 to 100 PSIG
(2.41 to 6.90 BAR) Range (Red Color Code)
Pilot Spring 200 PSIG Inlet Pressure (13.8 BAR) Inlet Pressure
Medium Gain Restrictor

F627 Flow Capacities in SCFH (Nm³/h) of 0.6 Specific Gravity Natural Gas at 1% Droop in Absolute

Pilot Spring Range Part Number Color Code	Outlet Pressure Setting		Inlet Pressure		3/4" (DN 20) Body Size				1" Body Size				2" Body Size			
					Orifice Diameter, inches				Orifice Diameter, inches				Orifice Diameter, inches			
	PSIG	BAR	PSIG	BAR	3/8 x 1/8 (9.52 x 3.18)	3/8 x 1/4 (9.53 x 6.35)	3/8 (9.53)	1/2 (12.7)	3/8 x 1/8 (9.52 x 3.18)	3/8 x 1/4 (9.53 x 6.35)	3/8 (9.53)	1/2 (12.7)	3/8 x 1/8 (9.52 x 3.18)	3/8 x 1/4 (9.53 x 6.35)	3/8 (9.53)	1/2 (12.7)
5 to 35 PSIG (0.34 to 2.41 BAR) 655000154 Green	5	0.34	30	2.07	700	2840	5780	9730	700	2840	6040	10,100	700	2840	6150	10,100
			40	2.76	660	3500	7480	13,100	860	3500	7480	13,100	860	3500	7760	13,800
			50	3.45	1020	4140	8850	15,400	1020	4140	8850	15,400	1020	4140	9180	16,300
			60	4.14	1170	4780	10,200	15,500	1170	4780	10,200	17,800	1170	4780	10,600	18,800
			80	5.52	1490	6060	12,900	15,500	1490	6060	12,900	18,500	1490	6060	13,400	23,800
			100	6.90	1800	7340	15,500	15,500	1800	7340	15,700	18,500	1800	7340	16,300	28,900
			125	8.62	2200	8940	15,500	15,500	2200	8940	18,500	18,500	2200	8940	19,800	30,000
			150	10.3	2560	10,500	15,500		2590	10,500	18,500		2580	10,500	23,400	
			200	13.6	3370	13,700	15,500		3370	13,700	18,500		3370	13,700	30,000	
			250	17.2	4170	15,500	15,500		4170	15,500	18,500		4170	15,500	30,000	
	10	0.69	30	2.07	690	2760	5480	8500	690	2760	5480	8930	690	2760	5840	9500
			40	2.76	860	3500	7480	13,100	860	3500	7480	13,100	860	3500	7760	13,800
			50	3.45	1020	4140	8850	15,400	1020	4140	8850	15,400	1020	4140	9180	16,300
			60	4.14	1170	4760	10,200	17,800	1170	4780	10,200	17,800	1170	4780	10,600	18,800
			80	5.52	1490	6060	12,900	19,500	1490	6060	12,900	22,400	1490	6060	13,400	23,800
			100	6.90	1800	7340	15,700	19,500	1800	7340	15,700	22,600	1800	7340	16,300	28,900
			125	8.62	2200	8940	17,500	19,500	2200	8940	19,100	22,600	2200	8940	19,800	35,100
			150	10.3	2580	10,500	19,500		2580	10,500	22,500		2580	10,500	23,400	
			200	13.8	3370	13,700	19,500		3370	13,700	22,600		3370	13,700	30,500	
			250	17.2	4170	16,900	19,500		4170	16,900	22,600		4170	16,900	37,600	
	20	1.38	40	2.76	820	3250	6320	10,000	820	3250	6830	10,500	820	3250	6830	10,900
			50	3.45	1000	4030	8010	13,400	1000	4030	8500	13,400	1000	4030	8570	13,900
			60	4.14	1170	4780	10,200	17,800	1170	4780	10,200	17,800	1170	4780	10,600	18,800
			80	5.52	1490	6060	12,900	22,600	1490	6060	12,900	22,600	1490	6060	13,400	23,800
			100	6.90	1800	7340	15,700	24,000	1800	7340	15,700	27,400	1800	7340	16,300	28,900
			125	8.62	2200	8940	19,100	28,000	2200	8940	19,100	33,300	2200	8940	19,800	35,100
			150	10.3	2580	10,500	22,500		2580	10,500	22,500		2580	10,500	23,400	
			200	13.8	3370	13,700	28,000		3370	13,700	29,400		3370	13,700	30,500	
			250	17.2	4170	16,900	28,000		4170	16,900	33,300		4170	16,900	37,600	
	30	2.07	50	3.45	930	3680	7090	11,000	930	3650	7670	11,700	930	3630	7670	11,700
			60	4.14	1140	4530	8880	14,800	1140	4530	9540	15,300	1140	4530	9540	15,300
			80	5.52	1490	6060	12,900	22,600	1490	6060	12,900	22,600	1490	6060	13,500	23,800
			100	6.90	1800	7340	15,700	27,400	1800	7340	15,700	27,400	1800	7340	16,300	28,900
			125	8.62	2200	8940	19,100	33,300	2200	8940	19,100	33,300	2200	8940	19,800	35,100
			150	10.3	2580	10,500	22,500		2580	10,500	22,500		2580	10,500	23,400	
			200	13.8	3370	13,700	28,000		3370	13,700	29,400		2370	13,700	30,500	
			250	17.2	4170	16,900	28,000		4170	16,900	36,200		4170	16,900	37,600	
35 to 100 PSIG (2.41 to 6.90 BAR) 655000155 Red	40	2.76	60	4.14	1030	4070	7770	10,400	1030	4070	8530	11,000	1030	4070	8440	12,000
			80	5.52	1450	5790	11,400	19,000	1450	5790	12,200	19,700	1450	5790	12,200	19,700
			100	6.90	1790	7340	15,700	27,400	1790	7340	15,700	27,400	1790	7340	16,300	28,900
			125	8.62	2200	8940	19,100	33,300	2200	8940	19,100	33,300	2200	8940	19,800	35,100
			150	10.3	2580	10,400	20,000		2560	10,400	22,500		2580	10,400	23,400	
			200	13.8	3370	13,500	20,000		3370	13,500	29,400		3370	13,500	30,500	
			250	17.2	4170	16,900	20,000		4170	16,900	36,200		4170	16,900	37,600	
	50	3.45	70	4.83	1130	4450	8430	10,600	1130	4450	8460	11,200	1130	4450	8460	14,000
			80	5.52	1370	5420	10,500	17,000	1370	5420	11,400	17,900	1370	5420	11,300	17,900
			100	6.90	1770	7060	14,000	23,000	1770	7060	14,900	24,200	1770	7060	15,000	24,200
			125	8.62	2200	8940	19,100	33,300	2200	8940	19,100	33,300	2200	8940	19,800	35,100
			150	10.3	2580	10,400	22,500		2580	10,400	22,500		2590	10,400	23,400	
			200	13.8	3370	13,500	29,000		3370	13,500	29,400		3370	13,500	30,500	
			250	17.2	4170	16,900	29,000		4170	16,900	36,200		4170	16,900	37,600	
	60	4.14	80	5.52	1220	4790	9050	12,000	1220	4790	9860	12,900	1220	4790	9860	14,000
			100	6.90	1700	6730	13,100	21,600	1700	6730	14,100	22,400	1700	6730	14,100	22,400
			125	8.62	2170	8700	17,300	28,400	2170	8700	18,400	30,000	2170	8700	18,400	30,000
			150	10.3	2580	10,300	22,500		2580	10,300	22,500		2580	10,300	23,400	
			200	13.8	3370	13,500	29,400		3370	13,500	29,400		3370	13,500	30,500	
			250	17.2	4170	16,900	32,000		4170	16,900	36,200		4170	16,900	37,600	
	75	5.17	100	6.90	1490	5870	11,100	17,000	1490	5870	12,100	18,000	1490	5870	12,100	18,000
			125	8.62	2080	8250	16,000	26,600	2080	8250	16,900	27,600	2080	8250	17,300	27,600
			150	10.3	2550	10,200	20,300		2550	10,200	20,300		2550	10,200	21,700	
			200	13.8	3370	13,500	29,400		3370	13,500	29,400		3370	13,500	30,500	
			250	17.2	4170	16,900	32,000		4170	16,900	36,200		4170	16,900	37,600	
	100	6.90	125	8.62	1660	6680	12,500	18,000	1660	6680	13,700	19,400	1660	6680	13,700	21,200
			150	10.3	2360	9320	17,800		2360	9320	19,400		2360	9320	19,400	
			200	13.8	3330	13,400	26,000		3330	13,400	28,300		3330	13,400	28,500	
			250	17.2	4170	16,900	36,000		4170	16,900	36,200		4170	16,900	37,600	

F627 Dimensions

Aluminum/Cast Ductile Iron Units

Type	Body Size		A	B	C	D	E	F*	K
F627	3/4"	mm	104	254	247	26	3/4"	190	152
		inches	4.08	10.0	9.75	1.0		7.5	6.0
	1"	mm	104	254	247	26	1"	190	152
		inches	4.08	10.0	9.75	1.0		7.5	6.0
	2"	mm	127	267	247	43	2"	216	152
		inches	5.0	10.5	9.75	1.69		8.5	6.0

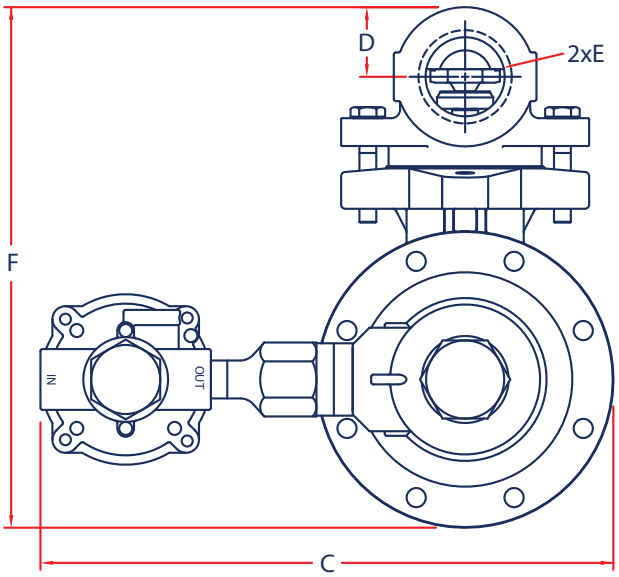

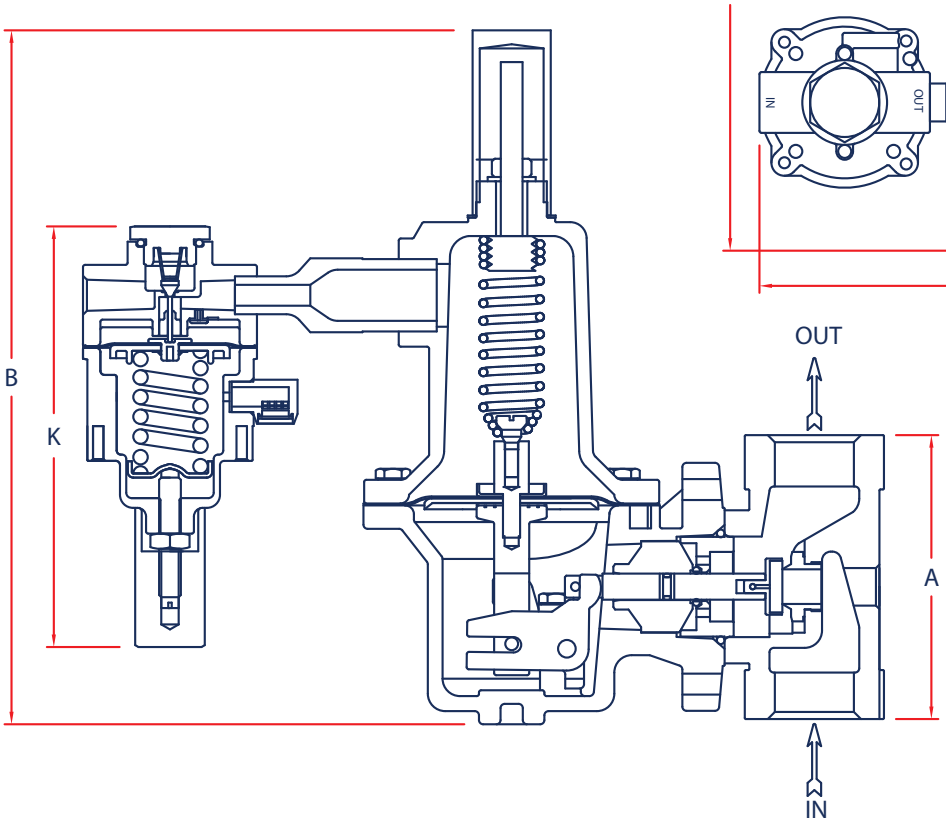

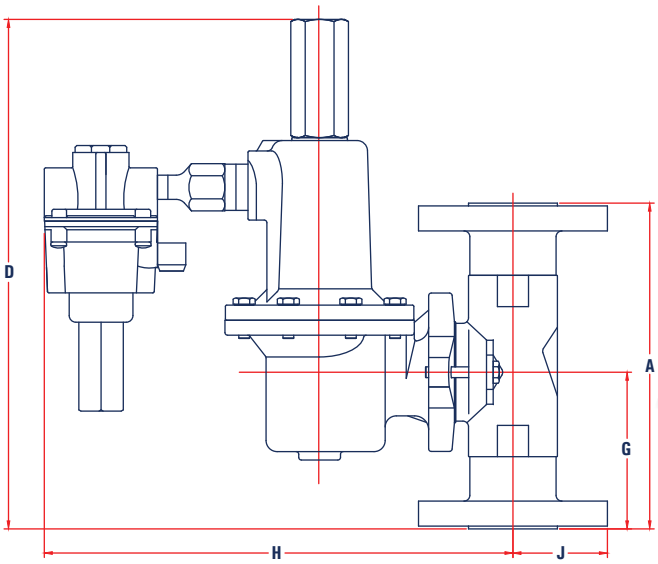

F627 Dimensions

Flange Units

Type	Body Size		A			D			G			H	J		
			150 RF	300 RF	600 RF	150 RF	300 RF	600 RF	150 RF	300 RF	600 RF	Steel	150 RF	300 RF	600 RF
F627 Flanged Units	1"	mm	184	197	210	297	297	297	91.9	98.6	105	168	53.8	62.0	62.0
		in.	7.25	7.75	8.25	11.7	11.7	11.7	3.62	3.88	4.12	6.62	2.12	2.44	2.44
	2"	mm	254	267	286	297	297	297	127	133	143	168	76.2	82.5	82.5
		in.	10	10.5	11.25	11.7	11.7	11.7	5	5.25	5.62	6.62	3	3.25	3.25

F627 Parts

Item	Description	Part Number
1	Closing Cap, Aluminum	610-068-000
32	Closing Cap Gasket	624-082-000
2	Spring Seat Bolt	648-541-000
33	Spring Retainer Screw	648-542-000
3	Locknut	634-000-112
4	Bonnet, F627 - Aluminum	604-210-000
	Bonnet, F627 - Steel	604-561-000
7	Tension Spring	655-745-000
8	Diaphragm Piston	637-306-000
	Diaphragm Standoff	637-020-000
	Diaphragm Nylon Gasket	624-083-000
	Piston Retainer	643-191-000
	Post, Pusher F627	827-005-000
	Diaphragms	
	Diaphragm F627 Aluminum (Nitrile)	618-069-000
	Diaphragm F627 Aluminum (Fluorocarbon)	618-069-001
	Diaphragm F627 Steel (Nitrile)	618-070-000
	Diaphragm F627 Steel (Fluorocarbon)	618-096-000
9	Build Screw, Spring Case - Aluminum (8 required)	648-466-000
	Build Screw, Steal (8 required)	648-467-003
10	Diaphragm Cases	
	Diaphragm Case - Aluminum	629-202-000
	Diaphragm Case, Aluminum (for Steel body)	629-215-000
	Diaphragm Case, Steel	629-203-000
11	Lever	703-004-000
12	Lever Screw (2 required)	648-466-002
13	Pin, Lever	635-053-000
14	Lever Retainer	643-192-000
15	Stem O-ring, Nitrile	649-000-003
	Stem O-ring, Fluorocarbon	649-000-343
16	Stem Backup Ring, TFE (2 required)	644-047-000
17	Pin, Groove	635-054-000
18	Stem Guide	626-083-000
19	Pin Clip	635-055-000
20	Stem, 316SS	689-005-000
30	Diaphragm Case O-ring, Nitrile	649-280-000
	Diaphragm Case O-ring, Fluorocarbon	649-280-001
21	Boost Body F627	686-005-000
22	O-ring - Nitrile	649-000-213
	O-ring - Fluorocarbon	010-380-003
23	Seat Assemblies	
	Seat assembly - aluminum holder/nitrile disk	822-019-000
	Seat assembly - aluminum/Fluorocarbon	822-040-000
	Seat assembly - 316SS holder/nitrile	822-020-000
	Seat assembly - 316SS/Fluorocarbon	822-040-001
24	Orifice - Aluminum	
	3/8" x 1/8"	688-059-001
	3/8" x 1/4"	688-059-000
	3/8"	688-013-001
	1/2"	688-013-000
	Orifice - 316SS	
	3/8" x 1/8"	688-060-001
	3/8" x 1/4"	688-060-000
	3/8"	688-014-001
	1/2"	688-014-000

Item	Description	Part Number
25	Bodies	
	Iron - 3/4" NPT	664-560-000
	Iron - 1" NPT	664-560-001
	Iron - 2" NPT	664-563-000
	Steel - 3/4" NPT	664-559-000
	Steel - 1" NPT	664-559-001
	Steel - 2" NPT	664-564-000
	LCC - 3/4" NPT	664-569-000
	LCC - 1" NPT	664-569-001
	LCC - 2" NPT	664-565-000
	Steel - 3/4" Socket Weld	664-566-000
	Steel - 1" Socket Weld	664-567-000
	Steel - 2" Socket Weld	664-568-000
27 (Not Shown)	Build Screw, 3/4" & 1" aluminum unit	648-466-001
	Build Screw, all steel bodies	648-467-001
	Build Screw 2" aluminum unit (2 required)*	648-466-003
28	Name Plate Drive Screw (2 required) (not shown)	648-464-000
34	Bonnet/Pilot Reducing Nipple	633-023-000
29	Locking Nut	662-000-016
5	Locking Washer	662-000-152
6	PL81 Pilot Regulators	
	LP Standard Gain - Nitrile	832-032-000
	LP Low Gain - Nitrile	832-032-001
	LP High Gain - Nitrile	832-032-002
	LP Standard Gain - Fluorocarbon	832-032-003
	LP Low Gain - Fluorocarbon	832-032-004
	LP High Gain - Fluorocarbon	832-032-005
	HP Standard Gain - Nitrile	832-032-006
	HP Low Gain - Nitrile	832-032-007
	HP High Gain - Nitrile	832-032-008
	HP Standard Gain - Fluorocarbon	832-032-009
	HP Low Gain - Fluorocarbon	832-032-010
	HP High Gain - Fluorocarbon	832-032-011

F627 Parts

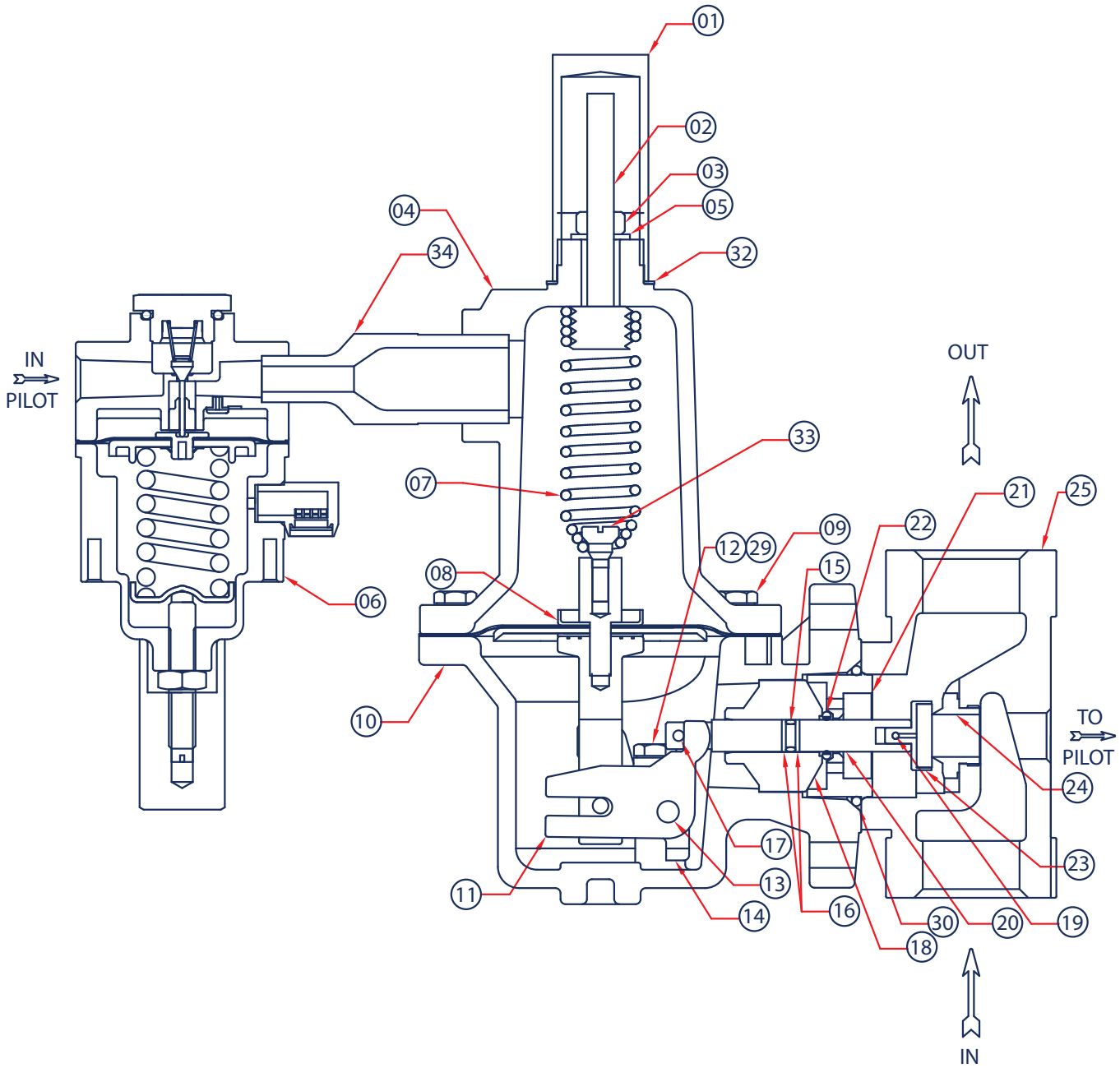
01
02
03
05
04
34
32
IN
PILOT
OUT
33
07
21
25
09
22
12
29
15
08
06
10
TO
PILOT
24
17
23
13
11
14
16
30
20
19
18
IN

W627 Liquid Gas Regulator

- Wide Range of Flow Capacities
- Durable Powder Coated Exterior
- Installation Versatility
- External Pressure Registration Model

The W627 is a spring loaded, direct-operated regulator for liquid service. These regulators provide durability, from the powder-coated epoxy exterior finish, as well as installation versatility, from the multi-position body and spring case configurations. These regulators are also available in an external pressure registration model (P627M).

Applications

- Industrial Chemical Processes
- Chemical Production
- Electronic Manufacturing

Materials of Construction

Body, Bonnet, Diaphragm Case	
Stainless Steel, Steel or Iron Body, Bonnet and Diaphragm Case	
Iron Body, Bonnet and Diaphragm Case	
Steel Body, Bonnet and Diaphragm Case	
LCC Steel Body, Bonnet and Diaphragm Case	
Diaphragm	
Option	Nitrile (Low Pressure) or Neoprene (High Pressure)
Seat	
Options	Nitrile
	Nylon
	Fluorocarbon
Orifice	
Stainless Steel	

Specifications

Maximum Differential Pressure (PSIG)		
Elastomer	200	
Nylon	400	
Outlet	10–500 PSIG	
Body Sizes	3⁄4 NPT	
	1 NPT	
	2 NPT	
Orifice Sizes	1⁄4"	
	1⁄2"	
	Outlet Range (PSIG)	Water Capacities (GPM)*
Output	10–20 PSIG	2.9–43
	15–40 PSIG	6.7–45
	35–80 PSIG	6.4–70
	70–150 PSIG	9.4–73
	140–250 PSIG	10–58
	240–500 PSIG	10–66
	* Capacity at 20% droop	
Temperature Range	–40˚ to 180˚F	(–40˚ to 82˚C)
Weight Approximate		
1"	5.3 lbs	2.39 kg
2"	8.8 lbs	3.96 kg

Maximum Bonnet and Diaphragm Casing Pressure	Spring & Diaphragm Casing Style	W627		W627M		W627H & W627HM	
		PSIG	BAR	PSIG	BAR	PSIG	BAR
Maximum pressure to spring and diaphragm casing to prevent leak to atmosphere (internal parts damage may occur).	Iron	250	17.2	250	17.2	N/A	N/A
	Steel / SS	250	17.2	250	17.2	800	55.2
Maximum pressure to spring and diaphragm casings to prevent burst of casings during abnormal operation (leak to atmosphere and internal parts may occur).	Iron	465	32.1	465	32.1	N/A	N/A
	Steel / SS	1200	82.7	1200	82.7	1200	82.7

W627 Regulator Rebuild Kits

	Kit Includes	Part Number
W627 Low Pressure	Nitrile diaphragms (2), SS Nitrile valve disk, O-rings, back-up rings, and retaining pin	971-627-N00
	Nitrile diaphragms (2), SS Nylon valve disk, O-rings, back-up rings, and retaining pin	971-627-N01

W627 Part Matrix

W627							**1**				
									Port Size		
	06								3⁄4"		
	08								1"		
	16								2"		
									Spring Range		
									PSIG	BAR	
		020							10 - 20	0.69 - 1.4	
		040							15 - 40	1 - 2.8	NOTE: Nitrile or FKM is recommended for 5-20, 15-40 and 10-95 PSIG. Nylon is recommended for pressures above 150 PSIG.
		080							35 - 80	2.4 - 5.5	
		095							10 - 95	0.7 - 6.6	
		150							70 - 150	4.8 - 10.3	
		250							140 - 250	9.7 - 17.2	
		500							240 - 500	16.5 - 34.5	
									Special Adders		
			0						None		
			2						Monitor		
			A						150 #RF		
			B						300 #RF		
			C						600 #RF		
			D						Socket Weld		
			E						900 #RTJ		
			W						150 #RF & Monitor		
			X						300 #RF & Monitor		
			Y						600 #RF & Monitor		
			Z						Socket Weld & Monitor		
									Version		
				0					Standard		
									Orifice		
					4				1⁄4"		
					8				1⁄2"		
									Seat Material		NOTE: Nitrile or FKM is recommended for 5-20, 15-40 and 10-95 PSIG. Nylon is recommended for pressures above 150 PSIG.
						0			Nitrile		
						1			Nylon		
						2			Fluorocarbon		
							1				
									Case / Body		
								0	Iron / Iron		
								1	Steel / Steel		
								7	Steel / LCC Steel		
								9	Stainless / Stainless		

W627 Regulator Water Capacities[1] in GPM (l/min) with or without a downstream control line

Outlet Pressure Range	Outlet Pressure Setting		Inlet Pressure		3/4" (DN 20) Body Size		1" (DN 25) Body Size		2" (DN 50) Body Size	
	PSIG	BAR	PSIG	BAR	1/4 Inch (6.35 mm) Orifice	1/2 Inch (12.7 mm) Orifice	1/4 Inch (6.35 mm) Orifice	1/2 Inch (12.7 mm) Orifice	1/4 Inch (6.35 mm) Orifice	1/2 Inch (12.7 mm) Orifice
10 to 20 PSIG (0.7 to 1.4 BAR)	10	0.69	15	1.0	2.9 (11.0)	6.9 (26.1)	2.9 (11.0)	7.0 (26.5)	3.0 (11.4)	7.0 (26.5)
			20	1.4	4.0 (15.1)	8.7 (32.9)	4.0 (15.1)	9.2 (34.8)	4.1 (15.5)	9.2 (34.8)
			30	2.1	5.4 (20.4)	13 (49.2)	6.0 (22.7)	13 (49.2)	6.0 (22.7)	13 (49.2)
			60	4.1	8.3 (31.4)	12 (45.4)	9.2 (34.8)	23 (87.1)	9.2 (34.8)	28 (106)
			75	5.2	9.4 (35.6)	12 (45.4)	10 (37.9)	23 (87.1)	10 (37.9)	33 (125)
			100	6.9	10 (37.9)	11 (41.6)	12 (45.4)	23 (87.1)	12 (45.4)	38 (144)
			150	10.3	10 (37.9)	10 (37.9)	15 (56.8)	22 (83.3)	15 (56.8)	29 (110)
			200	13.8	10 (37.9)	10 (37.9)	18 (68.1)	20 (75.7)	18 (68.1)	24 (90.8)
			300	20.7	10 (37.9)	–	22 (83.3)	–	22 (83.3)	–
			400	27.6	10 (37.9)	–	25 (94.6)	–	25 (94.6)	–
	20	1.4	30	2.1	4.8 (18.2)	11 (41.6)	4.8 (18.2)	11 (41.6)	4.8 (18.2)	11 (41.6)
			50	3.4	7.4 (28.0)	14 (53.0)	7.4 (28.0)	20 (75.7)	7.4 (28.0)	20 (75.7)
			60	4.1	8.4 (31.8)	14 (53.0)	8.4 (31.8)	25 (94.6)	8.4 (31.8)	25 (94.6)
			100	6.9	12 (45.4)	17 (64.3)	12 (45.4)	32 (121)	12 (45.4)	32 (121)
			150	10.3	15 (56.8)	16 (60.6)	15 (56.8)	42 (159)	15 (56.8)	42 (159)
			200	13.8	15 (56.8)	16 (60.6)	17 (64.3)	43 (163)	17 (64.3)	43 (163)
			300	20.7	14 (53.0)	–	21 (79.5)	–	21 (79.5)	–
			400	27.6	12 (45.4)	–	25 (94.6)	–	25 (94.6)	–
15 to 40 PSIG (1.0 to 2.8 BAR)	40	2.8	60	4.1	6.7 (25.4)	13 (49.2)	6.7 (25.4)	14 (53.0)	6.7 (25.4)	19 (71.9)
			75	5.2	8.3 (31.4)	18 (68.1)	8.3 (31.4)	23 (87.1)	8.3 (31.4)	25 (94.6)
			100	6.9	11 (41.6)	19 (71.9)	11 (41.6)	28 (106)	11 (41.6)	31 (117)
			150	10.3	14 (53.0)	20 (75.7)	14 (53.0)	40 (151)	14 (53.0)	40 (151)
			200	13.8	16 (60.6)	19 (71.9)	16 (60.6)	49 (185)	16 (60.6)	49 (185)
			300	20.7	18 (68.1)	19 (71.9)	21 (79.5)	45 (170)	21 (79.5)	45 (170)
			400	27.6	20 (75.7)	–	24 (90.8)	60 (227)	24 (90.8)	–
35 to 80 PSIG (2.4 to 5.5 BAR)	60	4.1	75	5.2	6.4 (24.2)	19 (71.9)	6.4 (24.2)	19 (71.9)	6.4 (24.2)	19 (71.9)
			100	6.9	9.2 (34.8)	20 (75.7)	9.2 (34.8)	23 (87.1)	9.2 (34.8)	24 (90.8)
			150	10.3	13 (49.2)	24 (90.8)	13 (49.2)	36 (136)	13 (49.2)	36 (136)
			200	13.8	16 (60.6)	26 (98.4)	16 (60.6)	42 (159)	16 (60.6)	51 (193)
			300	20.7	20 (75.7)	25 (94.6)	20 (75.7)	60 (227)	20 (75.7)	60 (227)
			400	27.6	22 (83.3)	23 (87.1)	22 (83.3)	60 (227)	22 (83.3)	66 (250)
	80	5.5	100	6.9	7.7 (29.1)	19 (71.9)	7.7 (29.1)	21 (79.5)	7.7 (29.1)	22 (83.3)
			150	10.3	12 (45.4)	20 (75.7)	12 (45.4)	35 (132)	12 (45.4)	41 (155)
			200	13.8	15 (56.8)	24 (90.8)	15 (56.8)	43 (163)	15 (56.8)	49 (185)
			300	20.7	20 (75.7)	26 (98.4)	20 (75.7)	60 (227)	20 (75.7)	60 (227)
			400	27.6	23 (87.1)	25 (94.6)	23 (87.1)	70 (265)	23 (87.1)	70 (265)
70 to 150 PSIG (4.8 to 10.3 BAR)	100	6.9	150	10.3	9.4 (35.6)	20 (75.7)	9.6 (36.3)	24 (90.8)	9.6 (36.3)	24 (90.8)
			200	13.8	12 (45.4)	23 (87.1)	13 (49.2)	32 (121)	14 (53.0)	32 (121)
			300	20.7	19 (71.9)	25 (94.6)	19 (71.9)	44 (167)	19 (71.9)	50 (189)
			500	34.5	26 (98.4)	25 (94.6)	26 (98.4)	58 (220)	26 (98.4)	82 (310)
	125	8.6	150	10.3	9.0 (34.1)	19 (71.9)	9.0 (34.1)	19 (71.9)	9.0 (34.1)	22 (83.3)
			200	13.8	13 (49.2)	24 (90.8)	13 (49.2)	29 (110)	13 (49.2)	31 (117)
			300	20.7	18 (68.1)	29 (110)	18 (68.1)	42 (159)	18 (68.1)	49 (185)
			500	34.5	25 (94.6)	33 (125)	25 (94.6)	74 (280)	25 (94.6)	74 (280)
	150	10.3	200	13.8	11 (41.6)	25 (94.6)	11 (41.6)	28 (106)	11 (41.6)	31 (117)
			300	20.7	17 (64.3)	34 (129)	17 (64.3)	43 (163)	17 (64.3)	43 (163)
			500	34.5	25 (94.6)	37 (140)	25 (94.6)	73 (276)	25 (94.6)	73 (276)

1. Water flow capacities based on a 20% proportional band. ()

W627 Regulator C_v Coefficients[1] with or without a downstream control line

Outlet Pressure Range	Outlet Pressure Setting		Inlet Pressure		3/4" (DN 20) Body Size		1" (DN 25) Body Size		2" (DN 50) Body Size	
	PSIG	BAR	PSIG	BAR	1/4 Inch (6.35 mm) Orifice	1/2 Inch (12.7 mm) Orifice	1/4 Inch (6.35 mm) Orifice	1/2 Inch (12.7 mm) Orifice	1/4 Inch (6.35 mm) Orifice	1/2 Inch (12.7 mm) Orifice
10 to 20 PSIG (0.7 to 1.4 BAR)	10	0.69	15	1.0	1.09	2.60	1.10	2.65	1.15	2.65
			20	1.4	1.14	2.51	1.15	2.64	1.19	2.64
			30	2.1	1.14	2.76	1.27	2.87	1.27	2.87
			60	4.1	1.14	1.64	1.27	3.22	1.27	3.28
			75	5.2	1.14	1.40	1.27	2.81	1.27	3.22
			100	6.9	1.06	1.12	1.27	2.41	1.27	3.20
			150	10.3	0.88	0.80	1.27	1.88	1.27	3.16
			200	13.8	0.68	0.70	1.27	1.49	1.27	3.15
			300	20.7	0.52	–	1.27	–	1.27	–
			400	27.6	0.50	–	1.27	–	1.27	–
	20	1.4	30	2.1	1.27	2.96	1.27	3.03	1.27	3.03
			50	3.4	1.27	2.33	1.27	3.48	1.27	3.48
			60	4.1	1.27	2.06	1.27	3.50	1.27	3.50
			100	6.9	1.27	1.81	1.27	3.54	1.27	3.54
			150	10.3	1.27	1.28	1.27	3.59	1.27	3.59
			200	13.8	1.13	1.02	1.27	3.14	1.27	3.16
			300	20.7	0.84	–	1.27	–	1.27	–
			400	27.6	0.59	–	1.27	–	1.27	–
15 to 40 PSIG (1.0 to 2.8 BAR)	40	2.8	60	4.1	1.27	2.49	1.27	2.56	1.27	3.48
			75	5.2	1.27	2.76	1.27	3.48	1.27	3.89
			100	6.9	1.27	2.30	1.27	3.44	1.27	3.77
			150	10.3	1.27	1.82	1.27	3.66	1.27	3.66
			200	13.8	1.27	1.40	1.27	3.75	1.27	3.75
			300	20.7	1.19	1.18	1.27	3.68	1.27	3.68
			400	27.6	0.94	–	1.27	–	1.27	–
35 to 80 PSIG (2.4 to 5.5 BAR)	60	4.1	75	5.2	1.22	3.61	1.25	3.61	1.25	3.61
			100	6.9	1.27	2.80	1.27	3.23	1.27	3.27
			150	10.3	1.27	2.37	1.27	3.56	1.27	3.59
			200	13.8	1.27	2.11	1.27	3.44	1.27	3.68
			300	20.7	1.27	1.55	1.27	3.60	1.27	3.60
			400	27.6	1.10	1.10	1.27	3.16	1.27	3.55
	80	5.5	100	6.9	1.27	3.17	1.27	3.48	1.27	3.72
			150	10.3	1.27	2.78	1.27	3.78	1.27	3.97
			200	13.8	1.27	2.31	1.27	3.66	1.27	3.78
			300	20.7	1.27	1.74	1.27	3.64	1.27	3.64
			400	27.6	1.27	1.15	1.27	3.56	1.27	3.56
70 to 150 PSIG (4.8 to 10.3 BAR)	100	6.9	150	10.3	1.12	2.32	1.15	2.85	1.15	2.85
			200	13.8	1.14	2.10	1.18	2.90	1.18	2.90
			300	20.7	1.27	1.67	1.27	2.97	1.27	3.07
			500	34.5	1.27	1.23	1.27	2.82	1.27	3.58
	125	8.6	150	10.3	1.27	2.69	1.27	2.75	1.27	3.08
			200	13.8	1.27	2.45	1.27	2.91	1.27	3.05
			300	20.7	1.27	2.04	1.27	2.98	1.27	3.14
			500	34.5	1.27	1.64	1.27	3.68	1.27	3.68
	150	10.3	200	13.8	1.27	2.80	1.27	3.18	1.27	3.47
			300	20.7	1.27	2.54	1.27	3.22	1.27	3.22
			500	34.5	1.27	1.90	1.27	2.76	1.27	2.76

1. C_v Coefficients based on a 20% proportional band.

W627 Flow Coefficients

Body Sizes Inches (DN)	Orifice size, Inches (mm)									
	Wide-Open C_V For Relief Sizing		K_M		IEC Sizing Coefficients					
					X_T		F_D		F_L	
	1/4 (6.4)	1/2 (12.7)	1/4 (6.4)	1/2 (12.7)	1/4 (6.4)	1/2 (12.7)	1/4 (6.4)	1/2 (12.7)	1/4 (6.4)	1/2 (12.7)
3/4 (20)	1.63	4.87	0.76	0.74	0.592	0.962	0.50	0.50	0.87	0.86
1 (25)	1.70	5.29			0.543	0.815				
2 (50)	1.66	5.01			0.620	1.01				

W627 Regulator Water Capacities[1] in GPM (l/min) with or without a downstream control line

Outlet Pressure Range	Outlet Pressure Setting		Inlet Pressure		3/4" (DN 20) Body Size		1" (DN 25) Body Size		2" (DN 50) Body Size	
	PSIG	BAR	PSIG	BAR	1/4 Inch (6.35 mm) Orifice	1/2 Inch (12.7 mm) Orifice	1/4 Inch (6.35 mm) Orifice	1/2 Inch (12.7 mm) Orifice	1/4 Inch (6.35 mm) Orifice	1/2 Inch (12.7 mm) Orifice
140 to 250 PSIG (9.65 to 17.2 BAR)	150	10.3	200	13.8	10 (37.9)	25 (94.6)	11 (41.6)	25 (94.6)	12 (45.4)	25 (94.6)
			250	17.2	14 (53.0)	31 (117)	14 (53.0)	31 (117)	14 (53.0)	31 (117)
			300	20.7	17 (64.3)	33 (125)	17 (64.3)	33 (125)	17 (64.3)	33 (125)
			400	27.6	20 (75.7)	34 (129)	21 (79.5)	34 (129)	21 (79.5)	34 (129)
			500	34.5	23 (87.1)	–	24 (90.8)	–	24 (90.8)	–
			550	37.9	24 (90.8)	–	25 (94.6)	–	25 (94.6)	–
	200	13.8	250	17.2	12 (45.4)	30 (114)	12 (45.4)	30 (114)	13 (49.2)	30 (114)
			300	20.7	15 (56.8)	36 (136)	16 (60.6)	36 (136)	16 (60.6)	36 (136)
			400	27.6	19 (71.9)	44 (167)	20 (75.7)	44 (167)	20 (75.7)	44 (167)
			500	34.5	22 (83.3)	–	22 (83.3)	–	23 (87.1)	–
			600	41.4	25 (94.6)	–	27 (102)	–	27 (102)	–
	250	17.2	300	20.7	13 (49.2)	35 (132)	13 (49.2)	51 (193)	13 (49.2)	51 (193)
			400	27.6	18 (68.1)	46 (174)	18 (68.1)	52 (197)	18 (68.1)	52 (197)
			500	34.5	22 (83.3)	51 (193)	23 (87.1)	58 (220)	22 (83.3)	58 (220)
			650	44.8	27 (102)	–	27 (102)	–	27 (102)	–
240 to 500 PSIG (16.5 to 34.5 BAR)	250	17.2	300	20.7	10 (37.9)	25 (94.6)	10 (37.9)	25 (94.6)	10 (37.9)	25 (94.6)
			400	27.6	15 (56.8)	30 (114)	16 (60.6)	32 (121)	16 (60.6)	32 (121)
			500	34.5	18 (68.1)	36 (136)	18 (68.1)	38 (144)	18 (68.1)	38 (144)
			650	44.8	20 (75.7)	–	20 (75.7)	–	20 (75.7)	–
	300	20.7	350	24.1	12 (45.4)	28 (106)	12 (45.4)	28 (106)	12 (45.4)	28 (106)
			400	27.6	15 (56.8)	31 (117)	16 (60.6)	32 (121)	16 (60.6)	32 (121)
			500	34.5	20 (75.7)	38 (144)	20 (75.7)	39 (148)	20 (75.7)	39 (148)
			700	48.3	27 (102)	–	27 (102)	–	27 (102)	–
	400	27.6	450	31.0	14 (53.0)	36 (136)	15 (56.8)	33 (125)	15 (56.8)	33 (125)
			500	34.5	18 (68.1)	41 (155)	19 (71.9)	42 (159)	19 (71.9)	42 (159)
			750	51.7	27 (102)	–	27 (102)	–	27 (102)	–
			800	55.2	28 (105)	–	28 (106)	–	28 (106)	–
	500	34.5	550	37.9	17 (64.3)	44 (267)	17 (64.3)	45 (170)	17 (64.3)	45 (170)
			600	41.4	19 (71.9)	50 (189)	20 (75.7)	51 (193)	20 (75.7)	51 (193)
			750	51.7	25 (94.6)	62 (235)	28 (106)	66 (250)	28 (106)	66 (250)
			900	62.1	27 (102)	–	28 (106)	–	28 (106)	–

1. Water flow capacities based on a 20% proportional band.

W627 Regulator C_v Coefficients[1] with or without a downstream control line

Outlet Pressure Range	Outlet Pressure Setting		Inlet Pressure		3/4" (DN 20) Body Size		1" (DN 25) Body Size		2" (DN 50) Body Size	
	PSIG	BAR	PSIG	BAR	1/4 Inch (6.35 mm) Orifice	1/2 Inch (12.7 mm) Orifice	1/4 Inch (6.35 mm) Orifice	1/2 Inch (12.7 mm) Orifice	1/4 Inch (6.35 mm) Orifice	1/2 Inch (12.7 mm) Orifice
140 to 250 PSIG (9.65 to 17.2 BAR)	150	10.3	200	13.8	1.17	2.83	1.20	2.83	1.26	2.83
			250	17.2	1.20	2.71	1.24	2.71	1.24	2.71
			300	20.7	1.25	2.51	1.30	2.51	1.30	2.51
			400	27.6	1.20	2.01	1.27	2.01	1.27	2.01
			500	34.5	1.17	–	1.23	–	1.23	–
			550	37.9	1.17	–	1.23	–	1.23	–
	200	13.8	250	17.2	1.26	3.14	1.30	3.14	1.34	3.14
			300	20.7	1.30	3.05	1.34	3.05	1.34	3.05
			400	27.6	1.25	2.80	1.27	2.80	1.27	2.80
			500	34.5	1.22	–	1.27	–	1.27	–
			600	41.4	1.22	–	1.27	–	1.27	–
	250	17.2	300	20.7	1.27	3.46	1.27	5.10	1.32	5.10
			400	27.6	1.27	3.25	1.27	3.68	1.28	3.68
			500	34.5	1.27	2.92	1.27	3.33	1.28	3.33
			650	44.8	1.27	–	1.27	–	1.28	–
240 to 500 PSIG (16.5 to 34.5 BAR)	250	17.2	300	20.7	1.00	2.46	1.03	2.52	1.03	2.52
			400	27.6	1.07	2.15	1.10	2.23	1.10	2.23
			500	34.5	1.02	2.08	1.02	2.17	1.02	2.17
			650	44.8	1.02	–	1.02	–	1.02	–
	300	20.7	350	24.1	1.17	2.63	1.18	2.69	1.18	2.69
			400	27.6	1.22	2.45	1.25	2.52	1.25	2.52
			500	34.5	1.27	2.33	1.27	2.45	1.27	2.45
			700	48.3	1.27	–	1.27	–	1.27	–
	400	27.6	450	31.0	1.27	3.16	1.29	3.23	1.29	3.23
			500	34.5	1.38	3.02	1.40	3.10	1.40	3.10
			750	51.7	1.28	–	1.28	–	1.28	–
			800	55.2	1.28	–	1.28	–	1.28	–
	500	34.5	550	37.9	1.40	3.57	1.42	3.64	1.42	3.64
			600	41.4	1.36	3.51	1.38	3.60	1.38	3.60
			750	51.7	1.34	3.50	1.38	3.50	1.38	3.50
			900	62.1	1.34	–	1.38	–	1.38	–

W627 Parts

Item	Description	Qty.	Part Number
1	Cover Adj. Screw, Plastic	1	610-053-000
2	Adjustment Screw	1	648-465-000
3	Locknut	1	634-154-000
4	Bonnet, W627 - Iron	1	604-265-000
	Bonnet, W627 - Steel		604-211-000
	Bonnet, W627 - Stainless		604-266-000
5	Vent Screw Assembly	1	836-005-000
6	Spring Guide, Upper	1	626-079-000
7	Range Spring	1	
	10-20 PSIG–Yellow		655-661-000
	15-40 PSIG–Green		655-661-001
	35-80 PSIG & 10-95–PSIG Blue		655-661-002
	70-150 PSIG–Red		655-661-003
	140-250 PSIG–Blue		655-661-002
	240-500 PSIG–Red		655-661-003
8	Spring Guide, Lower	1	643-211-000
9	Iron Spring Case Screws - W627	8	648-466-000
	Steel Spring Case Screws		648-467-003
	Steel Spring Case Screws - W627H		648-467-002
	SS Spring Case Screws		648-550-000
	SS Spring Case Screws - W627H		648-550-001
10	Diaphragm Piston	1	637-336-000
	Diaphragm Piston - W627H		637-307-000
11	Diaphragm Iron (Nitrile)	1	618-069-000
	Diaphragm Iron (Fluoro)		618-069-001
	Diaphragm Steel / SS (Nitrile)		618-070-000
	Diaphragm Steel / SS (Fluoro)		618-096-000
	Diaphragm W627H Steel / SS (Nitrile)		618-070-000
	Diaphragm W627H Steel / SS (Fluoro)		618-096-000
12	Screw, Diaphragm	1	648-463-009
	Screw, Diaphragm W627H	1	648-467-000
13	Post, Pusher Assy	1	827-005-000
	Post, Pusher PW627H Assy		827-005-001
	Post, Pusher Stainless		827-008-000
	Post, Pusher W627H Stainless		827-008-001
14	Diaphragm Case - Iron	1	629-240-000
	Diaphragm Case - Steel		629-203-000
	Diaphragm Case - Stainless		629-242-000
	Diaphragm Case - W627M Iron		629-241-000
	Diaphragm Case - W627M Steel		629-204-000
	Diaphragm Case - W627M Stainless		629-243-000
15	Lever	1	703-011-000
16	Lever Screw	2	648-474-000
17	Pin, Lever	1	635-057-000
18	Lever Retainer	1	643-210-000
19	Stem O-ring, Nitrile	1	649-000-003
	Stem O-ring, Fluorocarbon		649-000-343
20	Stem Backup Ring, TFE	2	644-047-000
21	Pin, Groove	1	635-076-000
22	Stem Guide	2	626-115-000
	Stem Guide W627M		626-081-000
23	Pin Clip	1	635-056-000
24	Stem, 316SS	1	689-005-000

Item	Description	Qty.	Part Number
28	Seat assembly - 316SS Holder / Nitrile	1	822-020-000
	Seat assembly - 316SS / Nylon		822-020-001
	Seat assembly - 316SS / Fluorocarbon		822-040-001
29	Orifice - SS - 1⁄4"	1	688-014-002
	Orifice - SS - 1⁄2"		688-014-000
30	Iron Body - 3⁄4 NPT	1	664-280-000
	Iron Body - 1 NPT		664-280-001
	Iron Body - 2 NPT		664-282-000
	Steel Body - 3⁄4 NPT		664-281-000
	Steel Body - 1 NPT		664-281-001
	Steel Body - 2 NPT		664-283-000
	LCC Body - 3⁄4 NPT		664-325-000
	LCC Body - 1 NPT		664-325-001
	LCC Body - 2 NPT		664-326-000
	Stainless Body - 3⁄4 NPT		664-394-000
	Stainless Body - 1 NPT		664-394-001
	Stainless Body - 2 NPT		664-395-000
	Steel Body - 3⁄4 NPT Socket Weld		664-356-000
	Steel Body - 1 NPT Socket Weld		664-358-000
	Steel Body - 2 NPT Socket Weld		664-359-000
	Stainless Body - 3/4" Socket Weld		664-422-000
	Stainless Body - 1" Socket Weld		664-423-000
	Stainless Body - 2" Socket Weld		664-424-000
32	Diaphragm Spacer W627H	1	654-167-000
33	O-ring, Spacer W627H - Nitrile	1	649-279-000
	O-ring, Spacer W627H - Fluorocarbon		649-279-001
34	O-ring, Stem Guide - Nitrile	2	649-281-000
	O-ring, Stem Guide - Fluorocarbon		649-281-001
36	Backup Ring, Stem Guide	2	644-048-000
37	Body Screws / Iron & Steel Housing (Not Shown)	2	648-467-001
	Body Screws / SS Housing (Not Shown)		648-549-000
38	Spring Guide, Lower (W627H & W627HM only)	1	637-307-000
40	Name Plate Drive Screw (not shown)	2	648-464-000

W627 Parts

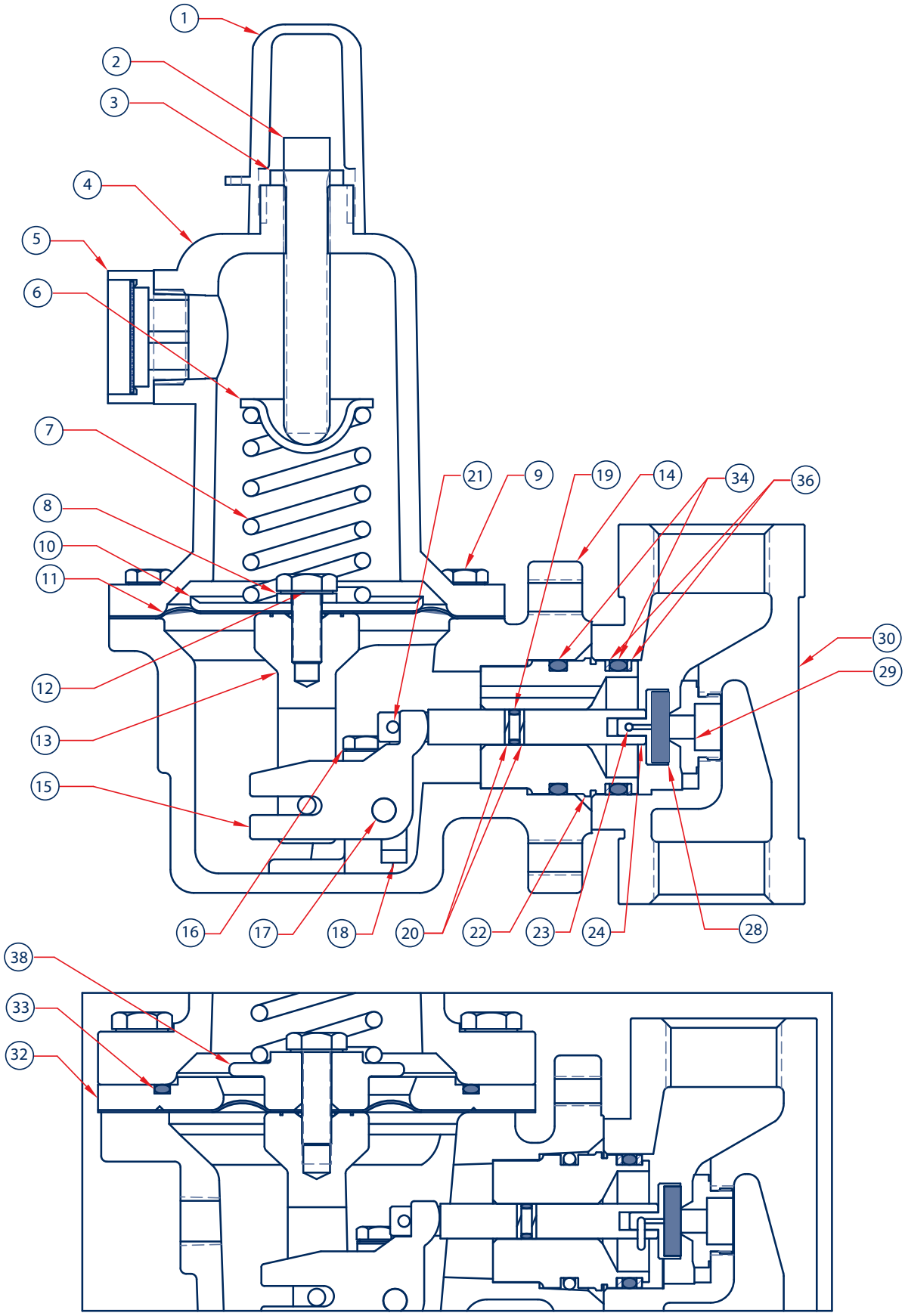
1
2
3
4
5
6
7
8
10
11
12
13
15
16
17
18
20
21
9
19
14
22
23
24
34
36
30
29
28
38
33
32

W627 Dimensions

Steel/Steel Units

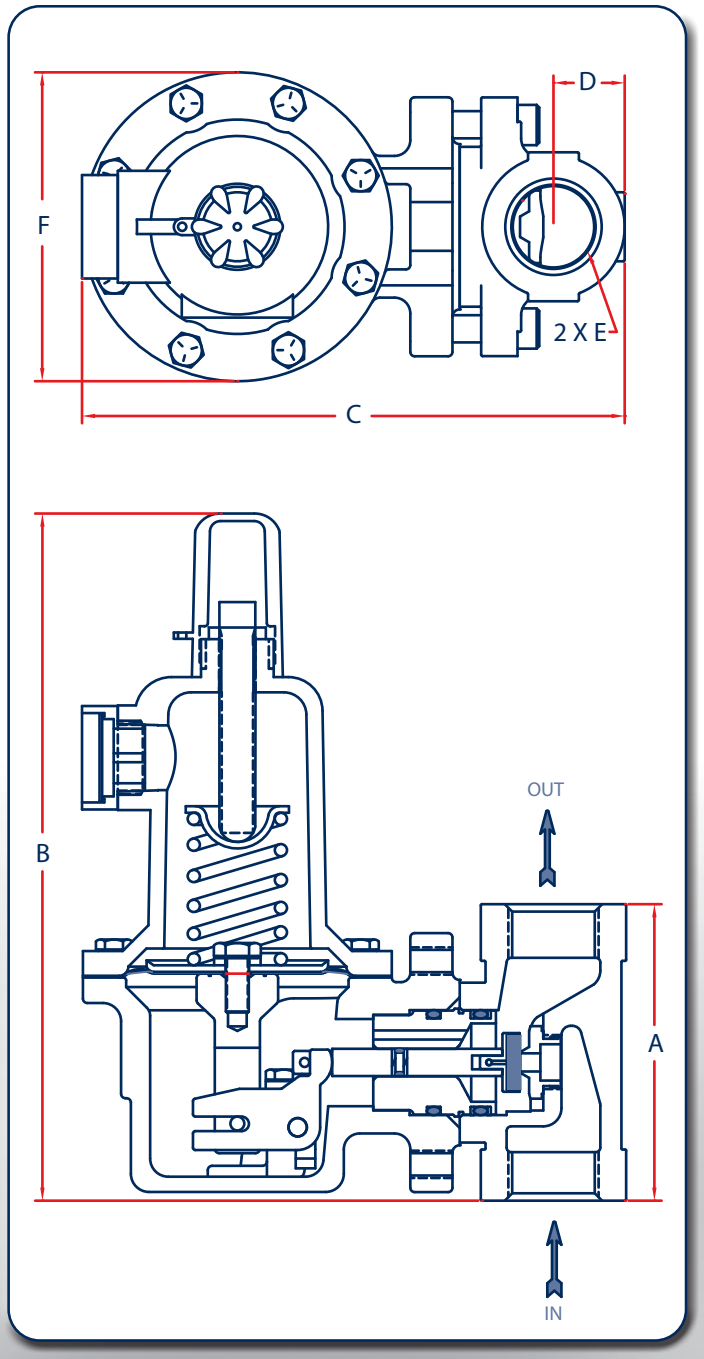

Type	Body Size		A	B	C	D	E	F*
627 & 627M	3/4"	mm	104	243	190	26	3/4"	108
		inches	4.08	9.54	7.46	1.0		4.25
	1"	mm	104	243	190	26	1"	108
		inches	4.08	9.54	7.46	1.0		4.25
	2"	mm	127	256	218	43	2"	108
		inches	5.0	10.06	8.56	1.69		4.25
627H & 627HM	3/4"	mm	104	250	194	26	3/4"	120
		inches	4.08	9.82	7.62	1.0		4.70
	1"	mm	104	250	194	26	1"	120
		inches	4.08	9.82	7.62	1.0		4.70
	2"	mm	127	265	224	43	2"	120
		inches	5.0	10.44	8.80	1.69		4.70

*F Dimensions for steel W627 and W627M - 120 mm/4.7 inches

W627H

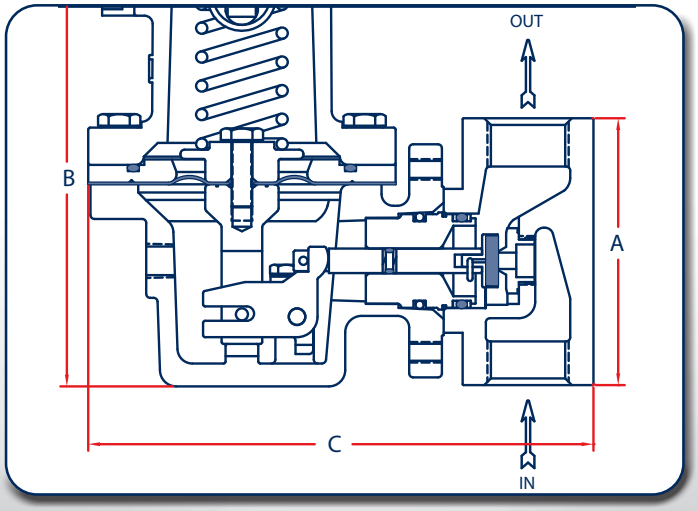

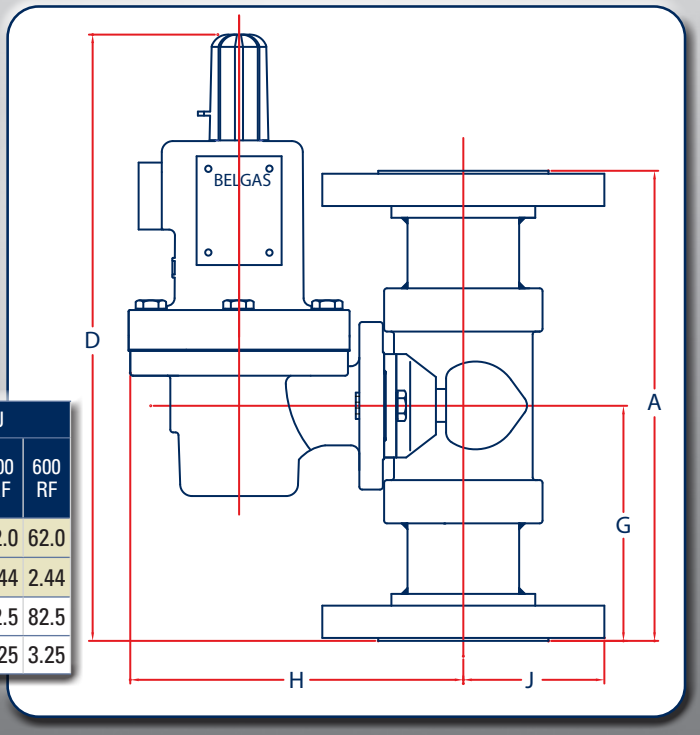

W627 Dimensions

Flange Units

Type	Body Size		A			D			G			H	J		
			150 RF	300 RF	600 RF	150 RF	300 RF	600 RF	150 RF	300 RF	600 RF	Steel	150 RF	300 RF	600 RF
W627 Flanged Units	1"	mm	184	197	210	286	292	298	91.9	98.6	105	172	53.8	62.0	62.0
		in.	7.25	7.75	8.25	11.24	11.5	11.75	3.62	3.88	4.12	6.75	2.12	2.44	2.44
	2"	mm	254	267	286	321	327	337	127	133	143	181	76.2	82.5	82.5
		in.	10	10.5	11.25	12.63	12.88	13.25	5	5.25	5.62	7.12	3	3.25	3.25

L627 High Flow LP Gas Regulator

- Wide Range of Flow Capacities
- Durable Powder Coated Exterior
- Installation Versatility

The L627 is a spring loaded, direct-operated LP Gas regulator for high pressure applications in the oil and gas industries. These regulators provide durability, from the powder-coated epoxy exterior finish, as well as installation versatility, from the multi-position body and spring case configurations.

Applications

- Fuel Gas
- Gas Gathering
- Pressure Reduction
- UL listed
- UL 144

L627 Part Matrix

L627			0	0		0	1	0	
									Port Size
	06								3/4"
	08								1"
	16								2"
									Spring Range
									PSIG / BAR
		020							5 - 20 / 0.34 - 1.4
		040							15 - 40 / 1 - 2.8
									Orifice
					4				1/4"
					6				3/8"
					8				1/2"

Specifications

Maximum Inlet Body Pressure		
Orifice (All Orifice Sizes)	250 PSIG	
Nitrile Seat	250 PSIG	All Units
Body Sizes	3/4 NPT	
	1 NPT	
	2 NPT	
Orifice Sizes	1/4"	
	3/8"	
	1/2"	
Output	5–20 PSIG	
	15–40 PSIG	
Temperature Range	–20° to 180°F	(–29° to 82°C)
Weight Approximate		
1"	5.3 lbs	2.39 kg

Materials of Construction

Body, Bonnet, Diaphragm Case	
Options	Cast Ductile Iron Body / Aluminum Bonnet & Diaphragm Case
Diaphragm	
Option	Nitrile
Seat	
	Nitrile
Orifice	
	Aluminum

Maximum Bonnet and Diaphragm Casing Pressure	L627	
	PSIG	BAR
Maximum pressure to spring and diaphragm casing to prevent leak to atmosphere (internal parts damage may occur).	250	17.2

L627 Regulator Rebuild Kit

	Kit Includes	Part Number
L627 Low Pressure	Nitrile diaphragms (2), Nitrile valve disk, O'rings, back-up rings, and retaining pin	971-627-L00

L627 Flow Capacities (0.6 S.G.) in SCFH[1]

Outlet Pressure Range	Outlet Pressure Setting		Inlet Pressure		3/4" Body Size			1" Body Size		
					Port Diameter, inches			Port Diameter, inches		
	PSIG	BAR	PSIG	BAR	1/4	3/8	1/2	1/4	3/8	1/2
5 to 20 psig[2] (0.34 to 1.4 BAR)	5[3]	0.34	10	0.69	1060	1540	1900	1100	1900	2500
			15	1.0	1300	2150	3350	1600	2500	3350
			20	1.4	1800	3050	4350	2060	3400	4450
			30	2.1	2490	3880	6850	2800	4750	6900
			60	4.1	4240	6270	7370	4710	8140	13,700
			75	5.2	5100	6620	7700	5710	9790	14,500
			100	6.9	5980	7440	7900	7310	12,500	16,000
	10	0.69	15	1.03	1290	2100	3300	1590	2480	3300
			20	1.4	1790	3000	4300	2050	3380	4410
			30	2.1	2480	3860	6830	2800	4720	6840
			60	4.1	4240	6270	7370	4710	8140	13,700
			75	5.2	5100	6620	7700	5710	9790	14,500
			100	6.9	5980	7440	7900	7310	12,500	16,000
			150	10.3	7130	8180	8200	10,500	17,000	18,000
			200	13.8	7250	8200	8300	13,700	18,000	18,500
	20	1.4	30	2.1	2490	4360	6290	2580	4360	6290
			50	3.4	4010	7870	8500	4090	7870	14,100
			60	4.1	4680	8340	8940	4750	9690	14,500
			100	6.9	7220	11,500	12,600	7310	13,900	23,300
			150	10.3	10,400	12,100	13,100	10,500	17,700	34,200
			200	13.8	12,000	13,200	13,700	13,700	26,600	39,100
15 to 40 PSIG (1.0 to 2.8 BAR)	40	2.8	60	4.1	4350	8140	9420	4510	9290	9420
			75	5.2	5510	10,300	13,600	5640	10,800	16,500
			100	6.9	7220	13,200	15,300	7310	14,700	21,900
			150	10.3	10,400	17,400	18,200	10,500	20,500	34,500
			200	13.8	13,500	18,000	18,500	13,700	27,100	46,400

1. Capacity is based on 20 percent droop unless otherwise noted below.
2. For pressure setting under 10 PSIG (0.69 BAR) limit the input pressure to 100 PSIG (6.9 BAR) to obtain the setpoint.
3. For 5 PSIG (0.34 BAR) pressure set point, the droop is 2 PSIG (0.14 BAR)

Outlet Pressure Range	Outlet Pressure Setting		Inlet Pressure		L627 – 2" Body Size		
					Port Diameter, inches		
	PSIG	BAR	PSIG	BAR	1/4	3/8	1/2
5 to 20 psig[2] (0.34 to 1.4 BAR)	5[3]	0.34	10	0.69	1080	1700	2400
			15	1.0	1250	1900	2700
			20	1.4	1900	2650	3900
			30	2.1	2800	3680	6500
			60	4.1	4750	7250	17,800
			75	5.2	5700	8060	22,400
			100	6.9	7310	16,200	28,700
	10	0.69	15	1.03	1220	1860	2670
			20	1.4	1880	2610	3830
			30	2.1	2760	3640	6460
			60	4.1	4750	7250	17,800
			75	5.2	5700	8060	22,400
			100	6.9	7310	16,200	28,700
			150	10.3	10,500	23,300	25,900[5]
			200	13.8	13,700	22,700[5]	24,000[5]
	20	1.4	30	2.1	2350	4300	6110
			50	3.4	4040	7100	12,800
			60	4.1	4750	8400	15,700
			100	6.9	7310	16,200	28,700
			150	10.3	10,500	23,300	29,000[5]
			200	13.8	13,700	24,000[5]	33,000[5]

1. Capacity is based on 20 percent droop unless otherwise noted below.
2. For pressure setting under 10 PSIG (0.69 BAR) limit the input pressure to 100 PSIG (6.9 BAR) to obtain the setpoint.
3. For 5 PSIG (0.34 BAR) pressure set point, the droop is 2 PSIG (0.14 BAR)
5. Capacities are based on 25 percent boost if setting is less than 12 PSIG (0.8 BAR), 3 PSIG (0.2 BAR) boost if setting is from 12 to 60 PSIG (0.2 to 4 BAR), and 5 percent boost if setting is greater than 60 PSIG (4 BAR).

Outlet Pressure Range	Outlet Pressure Setting		Inlet Pressure		L627 – 2" Body Size		
					Port Diameter, inches		
	PSIG	BAR	PSIG	BAR	1/4	3/8	1/2
15 to 40 PSIG (1.0 to 2.8 BAR)	40	2.8	60	4.1	4370	8680	13,300
			75	5.2	5540	11,900	19,300
			100	6.9	7310	16,200	25,400
			150	10.3	10,500	23,300	41,300
			200	13.8	13,700	30,400	53,900

1. Capacity is based on 20 percent droop unless otherwise noted below.
5. Capacities are based on 25 percent boost if setting is less than 12 PSIG (0.8 BAR), 3 PSIG (0.2 BAR) boost if setting is from 12 to 60 PSIG (0.2 to 4 BAR), and 5 percent boost if setting is greater than 60 PSIG (4 BAR).

L627 Dimensions

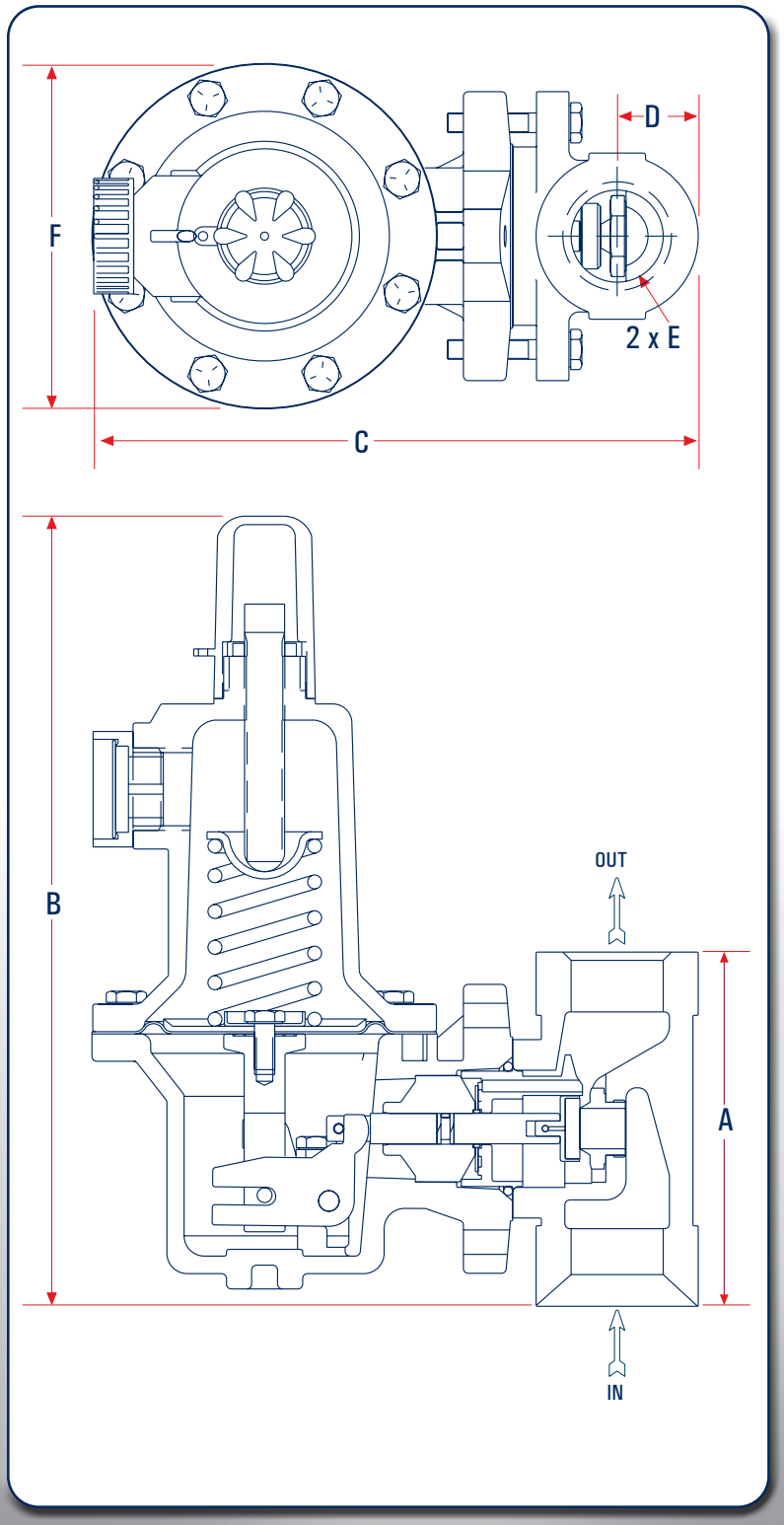

Type	Body Size		A	B	C	D	E	F*
L627	3/4"	mm	104	243	190	26	3/4"	108
		inches	4.08	9.54	7.46	1.0		4.25
	1"	mm	104	243	190	26	1"	108
		inches	4.08	9.54	7.46	1.0		4.25
	2"	mm	127	256	218	43	2"	108
		inches	5.0	10.06	8.56	1.69		4.25

L627 Flow Coefficients

Orifice Size		3/4 Inch Body			1 Inch (DIN 25) Body			2 Inch (DIN 50) Body			K
Inches	mm	Wide-Open C_g for External Relief Sizing	Wide-Open C_v for External Relief Sizing	C_1	Wide-Open C_g for External Relief Sizing	Wide-Open C_v for External Relief Sizing	C_1	Wide-Open C_g for External Relief Sizing	Wide-Open C_v for External Relief Sizing	C_1	
1/4	6.4	50	1.63	30.5	50	1.71	29.3	52	1.66	31.3	0.76
3/8	9.5	108	2.99	36.1	108	3.42	31.6	115	3.39	33.9	0.79
1/2	12.7	190	4.87	39.0	190	5.29	35.9	200	5.01	39.9	.074

L627 Parts

Item	Description	Part Number
1	Cover Adj. Screw, plastic	610-053-000
2	Adjustment Screw	648-465-000
3	Locknut	634-154-000
4	Bonnet, L627 - Aluminum	604-258-000
5	Vent Screw Assembly	836-005-000
6	Spring Guide, Upper	626-079-000
7	Range Spring	
	5-20 PSIG–Yellow	655-661-000
	15-40 PSIG–Green	655-661-001
8	Spring Guide, Lower	643-191-000
9	Build Screw, Spring Case (8 required)	
	L627 - Aluminum	648-466-000
10	Diaphragm Piston	637-306-000
11	Diaphragm	
	Aluminum/Iron Case (Nitrile)	618-093-000
12	Screw, Diaphragm	648-466-002
13	Post, Pusher	827-005-000
14	Diaphragm Case - Aluminum	629-202-000
15	Lever	703-004-000
16	Lever Screw (2 required)	648-466-002
17	Pin, Lever	635-053-000
18	Lever Retainer	643-192-001
19	Stem O-ring, Nitrile	649-000-003
20	Stem Backup Ring, TFE (2 required)	644-047-000

Item	Description	Part Number
21	Pin, Groove	635-054-000
22	Stem Guide	626-083-000
23	Pin Clip	635-055-000
24	Stem, 316SS	689-005-000
25	Diaphragm Case O-ring, Nitrile	649-280-000
26	Boost Body	686-003-000
27	Stabilizer, Nitrile	649-278-000
28	Seat assembly - Aluminum holder/nitrile disk	822-037-000
29	Orifice - Aluminum	
	1⁄4"	688-013-002
	3⁄8"	688-013-001
	1⁄2"	688-013-000
30	Body - Ductile Iron	
	3⁄4 NPT	664-280-000
	1 NPT	664-280-001
	2 NPT	664-282-000
31	Nameplate (not shown)	632-474-000
37	Build Screw, 3⁄4" & 1" Aluminum unit (2 required)	648-466-001
	Build Screw 2" Aluminum Unit (2 required)*	648-466-003
	*For 648-466-003 only, order 662-000-023 Lock Washer.	
39	Thread Locker	Consult factory
40	Name Plate Drive Screw (2 required) (not shown)	648-464-000

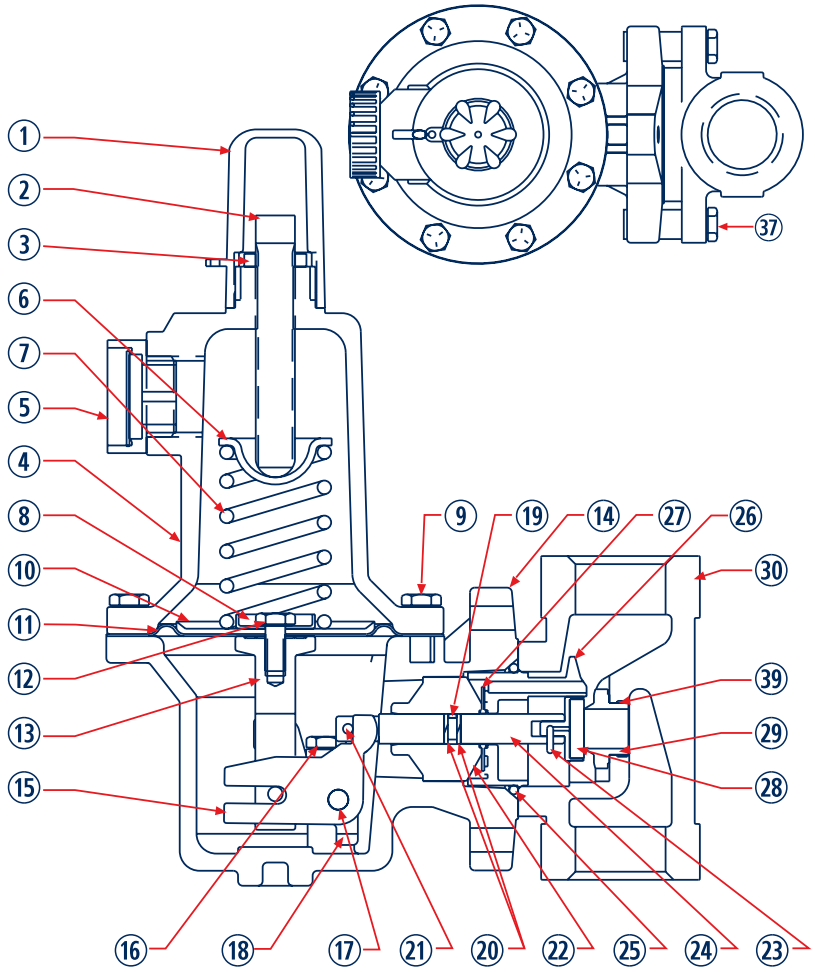

P630 High Flow Gas Regulator

- Stainless Steel Internals are Standard
- Steel Units comply with NACE MR0175
- Durable Powder Coated Exterior
- Wide Range of Flow Capacities

The P630 is a spring loaded, direct-operated regulator for high pressure, and high flow applications. The heavy duty construction, made possible by the addition of stainless steel internal components and a powder-coated epoxy exterior finish, makes it ideally suited for the oil and gas industries. All P630 steel units meet NACE MR0175 material requirements for corrosive (sour gas) environments.

Applications

- First Cut or Second Stage Regulator
- Farm Taps
- Transmission to Distribution Bridge
- High Pressure Process
- Fuel Gas

Materials of Construction

Body, Bonnet	Cast Iron
	Steel (1030 WCB)
Diaphragm	Neoprene
	Fluorocarbon
Seat	Nylon
	TFE
	Nitrile
Orifice	316 Stainless Steel

Wide Open Flow Coefficient for Relief Valve Sizing

Orifice Size (Inches)	C_v
1/8"	0.48
3/16"	1.11
1/4"	2.04
3/8"	4.60
1/2"	8.20

Maximum Supply Pressure

Orifice Sizes		Maximum Allowable Inlet Pressure[1]		Maximum Pressure Differential			
				Nylon and CTFE Disk		Nitrile Disk	
Inches	mm	PSIG	BAR	PSIG	BAR	PSIG	BAR
1/8 and 3/16	3.2 and 4.8	1500	103	1500	103	600	41.4
1/4	6.4			1000	69		
3/8	9.5	1000	69	500	34.5	500	34.5
1/2	13	750	51.7	250	17.2	250	17.2

1. The Inlet Pressure not exceed the sum of the set output pressure and the maximum pressure differential.
2. Although Nitrile disks can be used with Maximum Allowable Pressure Drops listed in the Table above, it is recommended that the drops across the Nitrile disks be limited to 200 PSIG (13.8 BAR) for optimal disk life. It is recommended to use nylon disks for larger pressure drops.

Specifications

MAX Casing Pressure	Low Pressure Spring Range - 66 PSI	
	High Pressure Spring Range - 550 PSIG	
Maximum Inlet	1500 PSIG (see table)	
Outlet	3–500 PSIG	
Body Sizes	1 NPT	
	2 NPT	
Orifice Sizes	1/8"	
	3/16"	
	1/4"	
	3/8"	
	1/2"	
Outlet Ranges		Flow Range*
Low Pressure	3–10 PSIG	200 – 79,000
	8 – 20 PSIG	500 – 82,000
	17 – 30 PSIG	600 – 85,000
	27 – 40 PSIG	800 – 85,000
Regular	27 – 50 PSIG	800 – 85,000
	46 – 95 PSIG	900 – 92,000
	90 – 150 PSIG	2,000 – 88,000
	150 – 200 PSIG	3,400 – 90,000
	200 – 275 PSIG	4,200 – 112,000
	275–500 PSIG	6,600 – 141,000
		* (SCFH of 0.6 S.G. Natural Gas)
Temp. Range	–20° to 150°F	–29° to 66°C
Weight Approximate		
1"	20 lbs	9 kg
2"	25 lbs	11.25 kg

The P630 comes standard with durable stainless steel components for added corrosion protection and long life. All P630 steel units are manufactured to NACE MR0175 standards.

P630 Part Matrix

P630			**0**							
									Body Size	
	08								1"	
	16								2"	
									Spring Range	
									PSIG	BAR
		010							3 - 10	0.2 - .7
		020							8 - 20	0.6 - 1.4
		030							17 - 30	1.2 - 2.1
		040							27 - 40	1.9 - 2.8
		050							27 - 50	1.9 - 3.5
		095							46 - 95	3.2-6.6
		150							90 - 150	6.2-10.3
Note: It is recommended to use Nylon or CTFE seat disks for spring ranges above 150 PSIG		**200**							150 - 200	10.3-13.8
		275							200 - 275	13.8-18.9
		500							275 - 500	18.9-34.5
									Body Construction	
				0					Standard NPT Units	
									Flanged Connections	
				A					150 # RF*	
				B					300 # RF*	
				C					600 # RF*	
									Orifice	
					2				1/8"	
					3				3/16"	
					4				1/4"	
					6				3/8"	
					8				1/2"	
									Seat Material	
						0			Nitrile	
						1			Nylon	
						2			CTFE	
									Diaphragm	
							2		Fluorocarbon	
							3		Neoprene	
									Casing Material	
								0	Iron	
								1	Steel (standard NACE)	

Low Pressure Spring Ranges

High Pressure Spring Ranges

*Steel Units Only

P630 Regulator Rebuild Kits

	Kit Includes	Part Number
P630 High Pressure, Ranges 27 - 50 PSIG and above	Neoprene diaphragm, Nylon valve disk, O-rings, back-up rings, and 2 orifice gaskets	971-630-000
	Neoprene diaphragm, CTFE valve disk, one body gasket, and 2 orifice gaskets	971-630-100
	Fluorocarbon diaphragms (2), Nylon valve disk, one body gasket, and 2 orifice gaskets	971-630-200
	Fluorocarbon diaphragms (2), CTFE valve disk, one body gasket, and 2 orifice gaskets	971-630-300

P630 Dimensions

	Body Size		A	B	C	D	E	F
High Pressure P630	1"	mm	193	392	198	29	1" NPT	119
		inches	7.61	15.45	7.79	1.15		4.67
	2"	mm	207	398	215	45	2" NPT	119
		inches	8.13	15.68	8.45	1.90		4.67
Low Pressure P630	1"	mm	193	392	231	29	1" NPT	184
		inches	7.61	15.45	9.09	1.15		7.25
	2"	mm	207	398	398	45	2" NPT	184
		inches	8.13	15.68	9.75	1.90		7.25

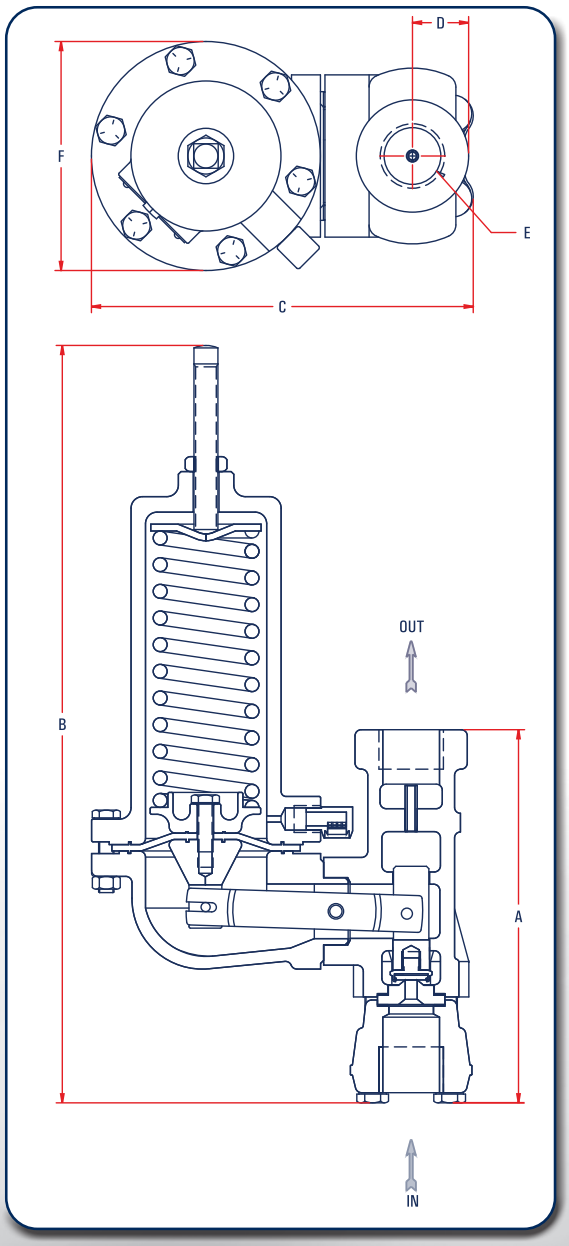

P630 Flanged Dimensions

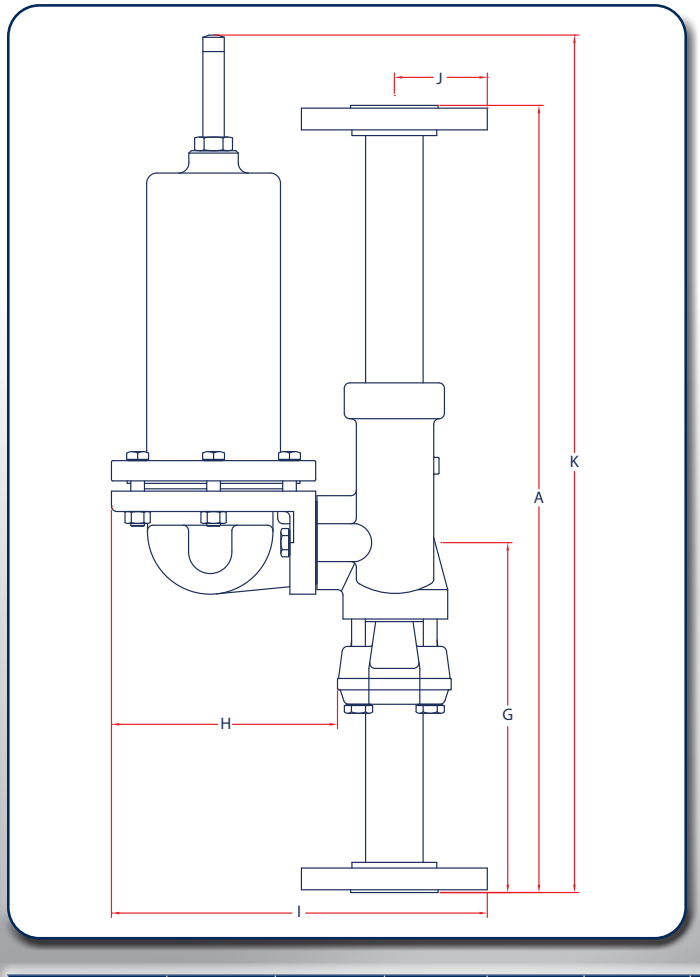

	Body Size		A	G	H	I CLASS 150 RF	I CLASS 300 RF and 600 RF	J CLASS 150 RF	J CLASS 300 RF and 600 RF	K
High Pressure P630	1"	mm	457	203	132	218	226	53.3	61.0	546 max
		inches	18	8	5.2	8.6	8.9	2.1	2.4	21.5 max
	2"	mm	508	229	117	241	246	76.2	83.8	546 max
		inches	20	9	4.6	9.5	9.7	3.0	3.3	21.5 max
Low Pressure P630	1"	mm	457	203	198	285	292	53.3	61.0	533 max
		inches	18	8	7.8	11.2	11.5	2.1	2.4	21 max
	2"	mm	508	229	183	307	312	76.2	83.8	559 max
		inches	20	9	7.2	12.1	12.3	3.0	3.3	22 max

P630 Flow Capacities in SCFH of 0.6 S.G. Natural Gas at 20% Droop

Outlet Pressure Range	Outlet Pressure Setting		Inlet Pressure		1" Body Size					2" Body Size				
					Port Diameter, inches					Port Diameter, inches				
	PSIG	BAR	PSIG	BAR	1/8	3/16	1/4	3/8	1/2	1/8	3/16	1/4	3/8	1/2
3 to 10 PSIG (0.21 to 0.69 BAR)	5	0.34	10	0.69	200	510	990	1700	2200	290	830	1300	3300	5900
			20	1.4	400	770	1200	2000	2700	500	1200	2100	4800	9100
			30	2.1	600	1100	1500	2200	3300	760	1600	2700	7000	11,000
			50	3.5	950	1500	2100	2800	4200	1100	2200	3900	9800	17,000
			60	4.1	1100	1750	2400	3000	4100	1250	2700	4500	11,100	19,500
			75	5.2	1300	2100	2700	3400	4400	1500	3300	5400	13,000	23,000
			100	6.9	1700	2400	2900	4000	4900	1900	4300	7000	17,000	30,000
			150	10.3	2200	3000	3500	4600	5800	2800	6200	10,000	25,000	43,000
			200	13.8	3000	3400	4200	5100	6100	3700	8200	13,000	32,000	57,000
			250	17.2	3500	3800	4300	5900	6800	4500	10,200	17,000	38,000	70,000
			400	27.5	3700	3900	4500	6400		7200	16,000	28,000	64,000	
			500	34.5	4100	4300	4700	7400		9100	19,000	35,000	79,000	
			600	41.4	4300	4600	5000			10,000	24,000	42,000		
			1000	69	4600	4900	5600			18,000	39,000	69,000		
			1500	103	5000	5400				22,000	60,000			
	10	0.69	20	1.4	500	1200	1800	4200	4900	560	1300	2200	5100	9000
			30	2.1	700	1400	2800	4100	5300	770	1500	3000	7000	11,000
			50	3.5	1000	2300	4100	5100	6200	1100	2400	4300	9800	17,000
			60	4.1	1150	2700	4200	5500	6500	1250	2800	5000	11,100	19,500
			75	5.2	1400	3200	4400	6000	6800	1500	3400	5900	13,000	23,000
			100	6.9	1600	3800	5000	6400	7300	1900	4400	7600	17,000	30,000
			150	10.3	2400	4800	6200	7300	7900	2800	6200	11,000	25,000	43,000
			200	13.8	3300	5800	6900	7700	8200	3700	8100	14,000	33,000	57,000
			250	17.2	4000	5900	7300	8600	8700	4400	10,000	17,000	41,000	70,000
			400	27.6	5400	6900	7600	9000		7200	16,000	28,000	62,000	
			500	34.5	6000	7100	7900	9700		8900	19,000	35,000	76,000	
			600	41.4	6500	7300	8200			10,000	23,000	42,000		
			1000	69	7200	7700	8400			18,000	40,000	72,000		
			1500	103	7400	8400				27,000	60,000			
8 to 20 PSIG (0.55 to 1.4 BAR)	10	0.69	20	1.4	500	700	1400	2200	3600	550	1200	1700	2500	4900
			30	2.1	700	1300	2100	3100	4300	760	1500	2500	4600	8800
			50	3.5	900	1900	3200	4300	5400	1000	2300	3800	7800	16,000
			60	4.1	1050	2300	3500	4700	5800	1200	2700	4500	9900	18,500
			75	5.2	1300	2800	4000	5200	6400	1500	3300	5600	13,000	23,000
			100	6.9	1600	3500	4600	5700	6900	1900	4300	7400	17,000	30,000
			150	10.3	2400	4400	5700	6800	7800	2800	6100	11,000	25,000	44,000
			200	13.8	3300	4800	6200	7500	8200	3600	8000	14,000	32,000	57,000
			250	17.2	4000	5800	7000	8000	8700	4400	9500	17,000	37,000	70,000
			400	27.6	5400	6500	7600	8900		7200	15,000	28,000	60,000	
			500	34.5	6000	6900	7900	9400		8800	19,000	35,000	74,000	
			600	41.4	6500	7000	8200			10,000	23,000	42,000		
			1000	69	7200	7700	8400			18,000	39,000	72,000		
			1500	103	7400	8100				27,000	60,000			
	15	1.0	20	1.4	470	1000	1700	3300	4900	520	1100	1800	3500	5700
			30	2.1	600	1500	2500	4600	5200	740	1600	2800	5900	10,000
			50	3.5	1000	2300	3800	5500	5700	1100	2400	4300	9800	16,000
			60	4.1	1150	2700	4300	6100	6800	1250	2800	5000	11,100	18,500
			75	5.2	1400	3300	5100	7000	8500	1500	3400	6000	13,000	23,000
			100	6.9	1900	4300	6200	7600	9600	1900	4400	7800	17,000	30,000
			150	10.3	2700	6100	7400	8000	9900	2800	6400	11,000	25,000	43,000
			200	13.8	3600	7500	8500	9600	10,000	3700	8300	14,000	31,000	57,000
			250	17.2	4700	8400	9100	10,000	11,000	4800	10,000	19,000	39,000	74,000
			400	27.6	7100	8700	10,000	11,000		7200	16,000	29,000	64,000	
			500	34.5	8300	8800	10,500	12,000		9200	20,000	37,000	82,000	
			600	41.4	8600	9600	10,800			11,000	23,000	42,000		
			1000	69	9600	10,000	11,000			18,000	40,000	71,000		
			1500	103	10,000	11,000				27,000	60,000			
	20	1.4	30	2.4	600	1500	2500	4600	6800	700	1600	2600	5200	9200
			40	2.8	800	2000	3400	5700	8100	900	2100	3500	7500	12,000
			50	3.5	1000	2300	4200	6800	9000	1100	2400	4300	9400	15,000
			60	4.1	1150	2700	4900	7500	9800	1250	2800	5100	11,000	18,000
			75	5.2	1400	3300	5900	8500	10,000	1500	3400	6100	13,000	23,000
			100	6.9	1800	4100	7400	9500	11,000	1900	4300	7800	17,000	29,000
			150	10.3	2700	6100	9200	11,000	12,000	2800	6300	11,000	23,000	42,000
			200	13.8	3600	8000	10,000	12,000	13,000	3700	8200	14,000	32,000	59,000
			270	18.6	4500	9800	11,000	13,000	14,000	4900	10,000	19,000	39,000	75,000
			400	27.6	7200	10,000	13,000	14,000		7300	16,000	28,000	63,000	
			520	35.0	8800	11,000	13,500	15,000		9500	20,000	37,000	82,000	
			600	41.4	10,000	12,000	13,800			11,000	24,000	43,000		
			1020	70.3	11,000	12,300	15,000			18,000	40,000	73,000		
			1500	103	12,000	13,000				27,000	60,000			

P630 Flow Capacities in SCFH of 0.6 S.G. Natural Gas at 20% Droop

BelGAS

Outlet Pressure Range	Outlet Pressure Setting		Inlet Pressure		1" Body Size					2" Body Size				
					Port Diameter, inches					Port Diameter, inches				
	PSIG	BAR	PSIG	BAR	1/8	3/16	1/4	3/8	1/2	1/8	3/16	1/4	3/8	1/2
17 to 30 PSIG (1.17 to 2.1 BAR)	20	1.4	30	2.4	590	900	1700	3300	4700	680	1300	2100	3500	6000
			40	2.8	790	1700	2400	4000	6100	890	1800	2800	5100	8200
			50	3.5	900	2200	3600	4900	6900	1000	2300	3700	6200	10,000
			60	4.1	1050	2500	4000	5500	7400	1200	2700	4300	7400	12,500
			75	5.2	1300	3000	4500	6400	8100	1500	3300	5300	9200	16,000
			100	6.9	1700	4000	5500	7600	9700	1900	4200	6900	12,000	24,000
			150	10.3	2100	5500	7000	9600	11,000	2200	6100	10,000	21,000	40,000
			200	13.8	3400	6400	9100	11,000	12,000	3500	8000	13,000	32,000	56,000
			270	18.6	4400	8400	10,000	12,000	13,000	4800	10,000	19,000	39,000	75,000
			400	27.6	7000	8700	11,000	13,000		7100	15,000	28,000	63,000	
			520	35.9	8200	10,000	12,000	13,800		9300	20,000	37,000	82,000	
			600	41.4	9600	11,000	13,000			10,000	24,000	42,000		
			1020	70.3	10,000	12,000	14,000			18,000	40,000	72,000		
			1500	103	12,000	13,000				27,000	60,000			
	30	2.1	40	2.8	820	1700	2700	5100	7600	860	1800	2900	5300	8500
			50	3.5	900	2200	3600	6400	6700	1000	2300	3800	7300	11,000
			60	4.1	1100	2600	4400	7500	9800	1200	2700	4700	8900	14,000
			75	5.2	1400	3300	5400	8800	11,000	1500	3400	5800	11,000	18,000
			100	6.9	1700	4100	6800	10,000	12,000	1800	4200	7800	16,000	28,000
			150	10.3	2600	6000	9100	13,000	14,000	2700	6100	11,000	20,000	44,000
			200	13.8	3500	8000	11,000	14,000	16,000	3600	8100	14,000	24,000	58,000
			280	19.3	4900	10,500	13,000	15,000	17,000	5000	11,000	20,000	46,000	80,000
			400	27.6	6900	13,000	15,000	17,000		7000	16,000	28,000	64,000	
			530	36.5	9400	14,500	15,800	19,000		9500	20,000	37,000	86,000	
			600	41.4	9700	15,000	16,000			10,000	23,000	42,000		
			1030	71.0	16,000	18,000	18,000			19,000	41,000	73,000		
			1500	103	16,400	18,500				27,000	61,000			
27 to 40 PSIG (1.86 to 2.8 BAR)	30	2.1	40	2.8	800	1500	2400	4400	6400	850	1600	2600	4500	7200
			50	3.5	900	2000	3200	5600	7700	1000	2200	3500	5900	9700
			60	4.1	1100	2500	3900	6300	8900	1200	2600	4200	7300	12,000
			75	5.2	1400	3000	4700	7700	10,000	1500	3200	5300	9400	15,000
			100	6.9	1700	3900	6400	9400	11,000	1800	4200	6900	12,000	23,000
			150	10.3	2600	5700	8800	12,000	14,000	2700	6100	10,000	20,000	39,000
			200	13.8	3500	7000	9400	14,000	15,000	3600	8100	13,000	24,000	57,000
			280	19.3	4900	10,000	13,000	15,000	16,000	5000	11,000	19,000	45,000	78,000
			400	27.6	6900	12,000	15,000	17,000		7000	15,000	28,000	64,000	
			530	36.5	9400	12,600	15,800	18,000		9500	20,000	37,000	85,000	
			600	41.4	9700	13,400	16,000			10,000	23,000	42,000		
			1030	71.0	16,000	16,000	18,000			19,000	41,000	73,000		
			1500	103	16,400	18,000				27,000	61,000			
	40	2.8	50	3.5	950	1800	3200	5500	8900	1000	2100	3400	5900	9900
			60	4.1	1100	2300	4100	7600	10,000	1200	2600	4300	7900	12,000
			75	5.2	1400	3000	5300	9300	12,000	1500	3400	5600	10,000	16,000
			100	6.9	1800	4100	7000	11,000	14,000	1900	4300	7200	13,000	24,000
			150	10.3	2700	6000	9500	14,000	17,000	2800	6200	10,000	22,000	39,000
			200	13.8	3500	7800	12,000	17,000	19,000	3600	8200	14,000	30,000	56,000
			290	20.0	5100	10,000	15,000	19,000	21,000	5200	11,000	20,000	46,000	81,000
			400	27.6	7100	15,000	18,000	21,000		7200	16,000	28,000	63,000	
			540	37.2	9500	17,000	19,000	22,000		9600	21,000	38,000	86,000	
			600	41.4	9800	18,000	21,000			10,000	23,000	42,000		
			1040	71.7	17,500	20,000	23,000			18,000	41,000	73,000		
			1500	103	20,000	22,000				27,000	61,000			
27 to 50 PSIG (1.86 to 3.4 BAR)	50	3.4	60	4.1	900	2000	3100	5200	8100	1000	2100	3200	5300	12,000
			75	5.2	1300	2800	3800	7200	10,000	1400	2900	3900	7300	16,000
			100	6.9	1700	3500	5700	10,500	13,000	1800	3600	5800	10,000	21,000
			150	10.3	2600	5700	8700	13,000	17,000	2700	5800	9000	15,000	36,000
			200	13.8	3500	7800	11,000	16,000	19,000	3600	7900	12,000	21,000	55,000
			300	20.7	5300	10,500	14,000	20,000	23,000	5500	11,000	19,000	48,000	83,000
			400	27.6	6900	13,000	17,000	23,000		7000	15,000	27,000	63,000	
			550	19.3	9600	16,000	20,000	26,000		9700	21,000	38,000	88,000	
			600	41.4	9800	17,000	21,000			10,000	23,000	42,000		
			1050	72.4	17,000	23,000	27,000			19,000	42,000	74,000		
			1500	103	19,000	25,000				27,000	60,000			
46 to 95 PSIG (3.2 to 6.5 BAR)	50	3.4	60	4.1	800	1500	2400	4300	6400	900	1600	2500	4400	7300
			75	5.2	1200	2100	3100	5500	8000	1300	2200	3200	6100	9300
			100	6.9	1500	3100	4200	7500	10,000	1600	3400	4300	7600	12,000
			150	10.3	2400	4500	6700	11,000	14,000	2500	4600	7100	12,000	19,000
			200	13.8	3400	6600	9400	14,000	17,000	3500	6700	9600	16,000	27,000
			300	20.7	5200	8900	11,000	16,000	20,000	5300	10,000	14,000	27,000	51,000
			400	27.6	6800	11,000	15,000	20,000		6900	13,000	21,000	46,000	
			550	19.3	9500	13,000	17,000	23,000		9600	18,000	29,000	87,000	
			600	41.4	9800	14,000	19,000			10,000	20,000	35,000		
			1050	72.4	14,000	19,000	22,000			18,000	41,000	73,000		
			1500	103	18,000	24,000				26,000	59,000			

P630 Flow Capacities in SCFH of 0.6 S.G. Natural Gas at 20% Droop

Outlet Pressure Range	Outlet Pressure Setting		Inlet Pressure		1" Body Size					2" Body Size				
					Port Diameter, inches					Port Diameter, inches				
	PSIG	BAR	PSIG	BAR	1/8	3/16	1/4	3/8	1/2	1/8	3/16	1/4	3/8	1/2
46 to 95 PSIG (3.2 to 6.5 BAR)	75	5.2	100	6.9	1700	3200	5000	8000	13,000	1800	3300	5200	9000	14,000
			125	8.6	2200	4300	6700	10,000	15,000	2300	4400	6900	11,000	18,000
			200	5.2	3500	7300	10,000	16,000	22,000	3600	7400	11,000	19,000	30,000
			250	17.2	4400	9400	13,000	19,000	24,000	4500	9500	14,000	26,000	44,000
			325	22.4	5700	11,000	16,000	23,000	27,000	5800	12,000	18,000	36,000	67,000
			400	27.6	7100	14,000	19,000	27,000		7200	15,000	24,000	47,000	
			575	39.6	9700	18,000	23,000	30,000		9800	22,000	37,000	92,000	
			600	41.4	9900	19,000	25,000			10,000	23,000	39,000		
			1075	74.1	18,000	27,000	32,000			19,000	42,000	75,000		
			1500	103	23,000	32,000				24,000	60,000			
90 to 150 PSIG (6.2 to 10.3 BAR)	100	6.9	125	8.6	2000	3600	5500	9200	13,000	2100	3700	5600	9800	15,000
			150	10.3	2500	4600	6800	11,000	16,000	2600	4900	7400	12,000	18,000
			200	5.2	3600	6600	9400	13,000	22,000	3700	6900	10,000	17,000	27,000
			250	17.2	4400	8500	11,000	18,000	26,000	4500	8700	13,000	22,000	34,000
			300	20.7	5300	9800	14,000	21,000	30,000	5400	10,000	16,000	27,000	44,000
			350	24.1	6100	10,000	16,000	25,000	32,000	6300	12,000	19,000	33,000	57,000
			400	27.6	7000	13,000	18,000	27,000		7200	14,000	21,000	39,000	
			600	41.4	9500	18,000	23,000	35,000		10,000	21,000	34,000	69,000	
			1100	75.8	19,500	28,000	35,000			19,000	43,000	74,000		
			1500	103	25,000	35,000				27,000	59,000			
	125	8.6	150	10.3	2400	4600	6700	11,000	17,000	2500	5000	8100	12,000	20,000
			200	5.2	3500	6800	10,000	15,000	23,000	3600	7400	11,000	19,000	30,000
			250	17.2	4300	8900	12,000	19,000	29,000	4400	9400	14,000	24,000	39,000
			300	20.7	5200	10,000	15,000	25,000	34,000	5300	11,000	17,000	31,000	48,000
			375	25.9	6600	13,000	18,500	28,000	39,000	7000	15,000	24,000	43,000	65,000
			400	27.6	7300	14,500	19,000	29,000		8300	18,000	28,000	56,000	
			500	34.5	7900	15,000	25,000	36,000		8800	19,000	30,000	59,000	
			625	43.1	10,000	22,000	29,000	41,000		11,000	24,000	40,000	79,000	
			1125	77.6	18,000	33,000	42,000			19,000	44,000	79,000		
			1500	103	26,000	43,000				27,000	60,000			
90 to 150 PSIG (6.2 to 10.3 BAR)	150	10.3	200	13.8	3400	6800	10,000	16,000	26,000	3500	7300	11,000	18,000	30,000
			250	17.2	4400	8800	13,000	20,000	32,000	4500	9500	15,000	26,000	38,000
			300	20.7	5300	10,000	15,000	24,000	35,000	5400	11,000	19,000	32,000	52,000
			400	27.6	7100	14,000	22,000	34,000	42,000	7200	15,000	26,000	46,000	77,000
			450	31.0	7700	17,000	24,000	36,000		8100	18,000	29,000	54,000	
			650	44.8	9000	24,000	33,000	49,000		10,000	25,000	44,000	88,000	
			800	55.2	13,000	29,000	38,000			14,000	30,000	54,000		
			1150	79.2	20,000	38,000	49,000			21,000	46,000	78,000		
			1500	103	26,000	47,000				27,000	60,000			
150 to 200 PSIG (10.3 to 13.8 BAR)	150	10.3	200	13.8	3400	6200	9300	16,000	24,000	3500	6900	10,000	17,000	28,000
			250	17.2	4300	8800	12,000	20,000	27,000	4400	9000	13,000	23,000	36,000
			300	20.7	5300	10,000	15,000	24,000	30,000	5400	11,000	17,000	28,000	47,000
			400	27.6	7100	14,000	21,000	32,000	38,000	7200	15,000	24,000	40,000	66,000
			450	31.0	7600	15,000	24,000	36,000		8000	17,000	27,000	46,000	
			650	44.8	9000	21,000	33,000	48,000		10,000	22,000	40,000	74,000	
			800	55.2	13,000	27,000	37,000			14,000	30,000	51,000		
			1150	79.3	19,500	34,000	49,000			20,000	45,000	78,000		
			1500	103	26,000	44,000				27,000	60,000			
	200	13.8	250	17.2	4200	8300	12,000	20,000	30,000	4300	9100	13,000	23,000	42,000
			300	20.7	5200	10,000	16,000	25,000	35,000	5300	11,000	18,000	33,000	52,000
			450	31.0	7800	16,000	26,000	43,000	50,000	7900	17,000	29,000	52,000	84,000
			600	41.1	9500	22,000	34,000	55,000		10,000	23,000	40,000	75,000	
			700	48.3	11,000	25,000	40,000	61,000		12,000	27,000	47,000	90,000	
			800	55.2	13,000	30,000	43,000			14,000	31,000	54,000		
			1000	68.9	16,000	37,000	50,000			17,000	39,000	69,000		
			1200	82.7	20,000	41,000	59,000			21,000	48,000	83,000		
			1500	103	26,000	53,000				27,000	60,000			

P630 Flow Capacities in SCFH of 0.6 S.G. Natural Gas at 20% Droop

Outlet Pressure Range	Outlet Pressure Setting		Inlet Pressure		1" Body Size					2" Body Size				
					Port Diameter, inches					Port Diameter, inches				
	PSIG	BAR	PSIG	BAR	1/8	3/16	1/4	3/8	1/2	1/8	3/16	1/4	3/8	1/2
200 to 275 PSIG (13.8 to 19 BAR)	200	13.8	250	17.2	4200	8200	11,000	20,000	29,000	4300	8900	12,000	23,000	35,000
			300	20.7	5200	10,000	14,500	25,000	35,000	5300	11,000	18,000	31,000	46,000
			450	31.0	7700	16,000	24,000	40,000	50,000	7800	17,000	28,000	50,000	78,000
			600	41.4	9500	22,000	31,000	51,000		10,000	23,000	38,000	70,000	
			700	48.3	11,000	25,000	35,000	55,000		12,000	27,000	45,000	83,000	
			800	55.2	13,000	29,000	42,000			14,000	31,000	52,000		
			1000	68.9	16,000	63,000	50,000			17,000	39,000	68,000		
			1200	82.7	19,000	41,000	55,000			20,000	46,000	83,000		
			1500	103	26,000	51,000				27,000	60,000			
	250	17.2	300	20.7	4900	9000	15,000	28,000	42,000	5000	10,000	17,000	30,000	52,000
			400	27.6	7000	14,000	23,000	40,000	56,000	7100	15,000	25,000	47,000	76,000
			500	34.5	8500	18,000	29,000	51,000	65,000	8600	19,000	34,000	62,000	103,000
			600	41.4	9500	22,000	34,000	59,000		10,000	23,000	41,000	78,000	
			750	51.7	12,500	28,000	44,000	69,000		13,000	29,000	51,000	106,000	
			1000	68.9	16,000	39,000	58,000			17,000	40,000	68,000		
			1200	82.7	21,000	49,000	69,000			22,000	50,000	87,000		
			1500	103	26,000	59,000				27,000	60,000			
	275	19	300	20.7	4700	9000	15,000	28,000	39,000	4800	10,000	17,000	29,000	43,000
			400	27.6	6900	14,000	25,000	40,000	54,000	7000	15,000	26,000	47,000	73,000
			525	36.2	8600	18,000	35,000	68,000	94,000	9200	20,000	36,000	69,000	112,000
			775	53.4	11,000	28,000	51,000	95,000		12,000	30,000	52,000	112,000	
			1000	68.9	16,000	39,000	67,000			17,000	40,000	68,000		
			1275	89.9	21,000	50,000	87,000			22,000	51,000	89,000		
			1500	103	26,000	60,000				26,000	61,000			
275 to 500 PSIG (19 to 34.5 BAR)	275	19	300	20.7	4500	7500	10,000	20,000	31,000	4600	8400	13,000	23,000	37,000
			400	27.6	6600	12,000	16,000	31,000	43,000	7000	13,000	20,000	32,000	53,000
			525	36.2	8600	16,000	21,000	39,000	56,000	9300	18,000	27,000	46,000	73,000
			775	53.4	11,000	24,000	32,000	55,000		13,000	28,000	44,000	73,000	
			1000	68.9	17,000	32,000	43,000			18,000	37,000	57,000		
			1275	87.9	21,000	40,000	53,000			22,000	48,000	77,000		
			1500	103	[illegible]									
	300	20.7	400	27.6										
			550	38										
			600	41.4										
			700	48.3										
			800	55.2										
			900	62.1										
			1300	90										
			1500	103										
	400	27.6	500	34.5										
			600	41.4										
			800	55.2										
			900	62.1										
			1000	68.9										
			1200	82.7										
			1400	96.5										
			1500	103										
	500	34.5	500	34.5										
			750	51.7										
			900	62.1										
			1000	68.9										
			1500	103										

P630 Low Pressure Parts

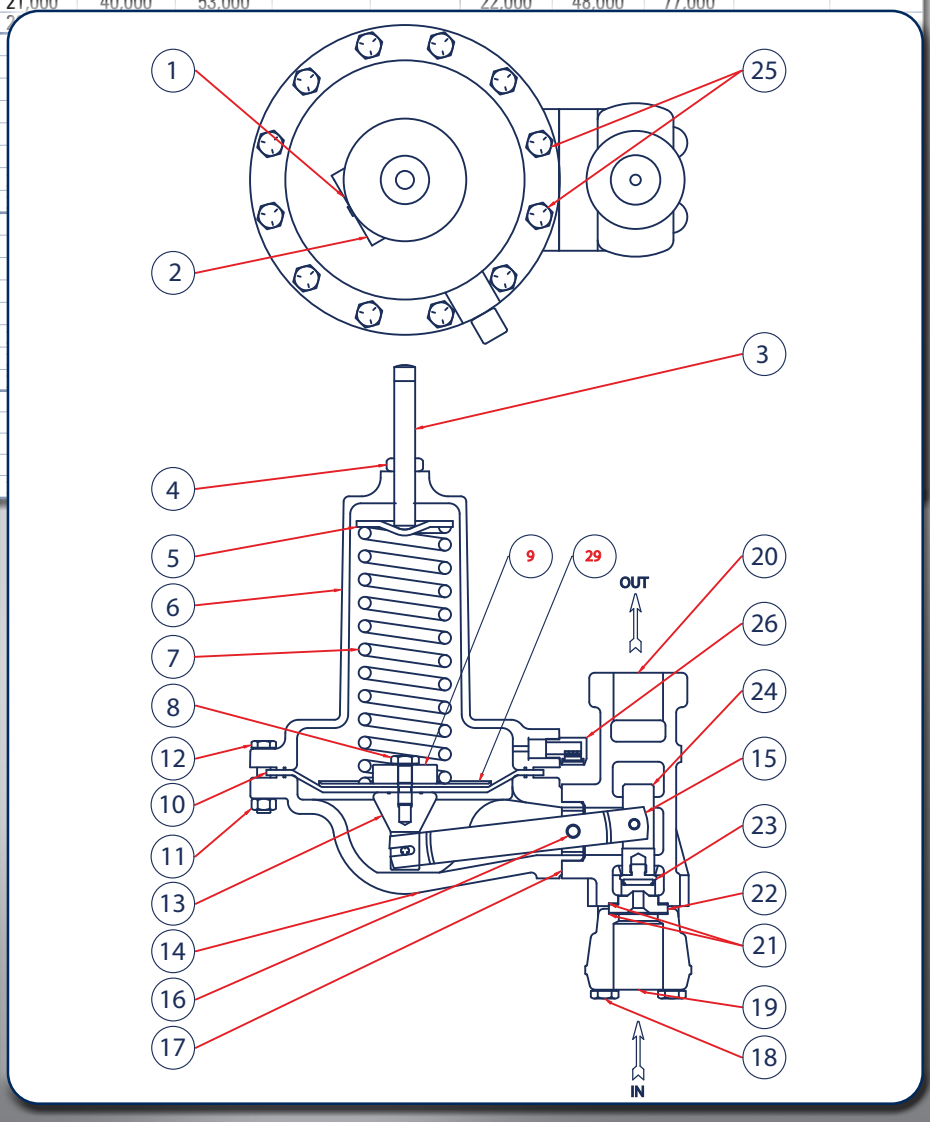

P630 Parts List

Item	Description			Part Number
1	Nameplate (requires 4 drive screws for mounting)			632-472-000
2	Drive Screw (4 required)			648-464-000
3	Adjusting Screw Spring Range	3-10 PSIG	Low Pressure Spring Ranges	648-462-002
		8-20 PSIG		648-462-001
		17-30 PSIG		648-462-000
		27-40 PSIG		648-462-000
		27-50 PSIG	High Pressure Spring Ranges	648-462-002
		46-95 PSIG		648-462-001
		90-150 PSIG		648-462-000
		150-200 PSIG		648-462-000
		200-275 PSIG		648-462-000
		275-500 PSIG		648-462-000
4	Hex Nut			634-000-056
5	Upper spring guide - Pressure range to 275 PSIG			626-077-000
	Upper spring guide - Over 275 PSIG			626-078-000
6	Bonnet - Iron (27-50 PSIG thru 275-500 PSIG ranges)			604-204-000
	Bonnet - Steel (27-50 PSIG thru 275-500 PSIG ranges)			604-205-000
	Bonnet - Iron (3-10 PSIG thru 27-40 PSIG ranges)			604-233-000
	Bonnet - Steel (3-10 PSIG thru 27-40 PSIG ranges)			604-234-000
7	Range Spring	3-10 & 27-50 PSIG – Red Stripe	Low Pressure	655-659-000
		8-20 & 46-95 PSIG – Olive Drab		655-659-001
		17-30 & 90-150 PSIG – Silver		655-659-002
		27-40 & 150-200 PSIG – Green Stripe	High Pressure	655-659-003
		200-275 PSIG – Blue Stripe		655-659-004
		275-500 PSIG – Yellow Stripe		655-659-005
8	Diaphragm Screw			648-463-000
9	Lower spring guide - 3-10 PSIG thru 27-40 PSIG			626-095-000
	Lower spring guide - 27-50 PSIG thru 200-275 PSIG			637-304-000
	Lower spring guide - 275-500 PSIG			637-305-000
10	Diaphragm	Neoprene (27-50 PSIG Thru 275-500 PSIG)		618-068-000
		Fluorocarbon (2 required for 27-50 PSIG thru 275-500 PSIG)		618-068-001
		Neoprene (3-10 PSIG thru 27-40 PSIG)		618-073-000
		Fluorocarbon (2 required for 3-10 PSIG thru 27-40 PSIG)		618-073-001
11	Hex nut for the iron diaphragm housing (4 required for ranges 27-50 PSIG or greater, 10 required for 3-10 PSIG thru 27-40 PSIG)			634-000-112
12	Build Screws	For the iron diaphragm housing (4 required for 27-50 PSIG thru 275-500 PSIG ranges)		648-463-003
		For the steel diaphragm housing (4 required for 27-50 PSIG Thru 275-500 PSIG ranges)		648-463-005
		For the iron diaphragm housing (10 required for 3-10 PSIG Thru 27-40 PSIG ranges)		648-463-003
		For the steel diaphragm housing (10 required for 3-10 PSIG Thru 27-40 PSIG ranges)		648-463-007
13	Connector piston assembly Aluminum trim, NACE			827-006-000
	Connector piston assembly Stainless Steel trim, NACE			827-006-001

P630 High Pressue Parts

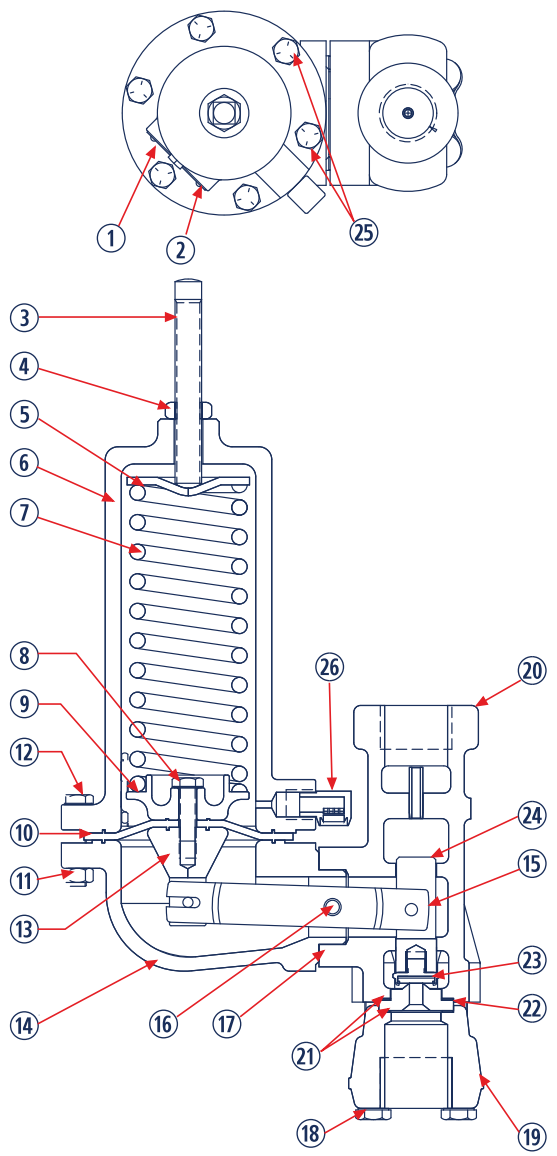

Item	Description		Part Number
14	Diaphragm Housing	Iron (27-50 PSIG Thru 275-500 PSIG)	629-199-000
		Steel (27-50 PSIG Thru 275-500 PSIG)	629-200-000
		Iron (3-10 PSIG Thru 27-40 PSIG)	629-224-000
		Steel (3-10 PSIG Thru 27-40 PSIG)	629-225-000
15	Lever Assembly	(27-50 PSIG Thru 275-500 PSIG)	827-003-000
		NACE (27-50 PSIG Thru 275-500 PSIG)	827-007-000
		All Low Pressure, (3-10 PSIG Thru 27-40 PSIG)	827-010-000
16	Pin		635-052-000
17	Gasket - Composite		624-056-000
18	Build screw	1" body (4 required)	648-463-004
		2" body (4 required)	648-463-006
19	Inlet adapter	1 NPT 1030 Carbon Steel	679-036-000
		2 NPT 1030 Carbon Steel	679-037-000
20	Body	1 NPT Iron	805-308-001
		1 NPT Steel	805-308-000
		2 NPT Iron	664-277-000
		2 NPT Steel	664-279-000
21	Orifice Gaskets Composite (2 required)		624-058-000
22	Orifice	1/8"	688-010-000
		3/16"	688-010-001
		1/4"	688-010-002
		3/8"	688-010-003

P630R High Flow Gas Relief Valve

- Stainless Steel Internals are Standard
- Steel Units comply with NACE MR0175
- Durable Powder Coated Exterior
- High Flow Capacities

The BelGAS P630R is a spring loaded, adjustable relief valve designed for relief pressure settings from 3 PSIG to 250 PSIG (0.21 to 17.3 BAR). The heavy duty construction, made possible by the addition of stainless steel internal components and a powder-coated epoxy exterior finish, makes it ideally suited for the oil and gas industries. All P630 steel units meet NACE MR0175 material requirements for corrosive (sour gas) environments.

Applications

- Compressor Stations
- Refineries
- High Pressure Plants

Materials of Construction

Body, Bonnet	Cast Iron
	Steel (1030 WCB)
Diaphragm	Neoprene
	Fluorocarbon
Seat	Nitrile
Orifice	316 Stainless Steel

P630R Part Matrix

P630R										
				8	0				Body Size	
	08								1"	
	16								2"	
									Spring Range	
									PSIG / BAR	
		008							3 - 8 / 0.21 - 0.55	Low Pressure Spring Ranges
		017							6 - 17 / 0.41 - 1.17	
		022							15 - 22 / 1.02 - 1.52	
		035							20 - 35 / 1.38 - 2.41	
		050							35 - 50 / 2.41 - 3.45	
		070							30 - 70 / 2.1 - 4.8	High Pressure Spring Ranges
		095							50 - 95 / 3.4 - 6.6	
		175							75 - 175 / 5.2 - 12.1	
		250							150 - 250 / 10.3 - 17.2	
			0						Standard NPT Units	
									Flanged Connections	*Steel Units Only
			A						150 # RF*	
			B						300 # RF*	
			C						600 # RF*	
									Diaphragm	
						2			Fluorocarbon	
						3			Neoprene	
									Casing Material	
							0		Cast Iron	
							1		Steel	

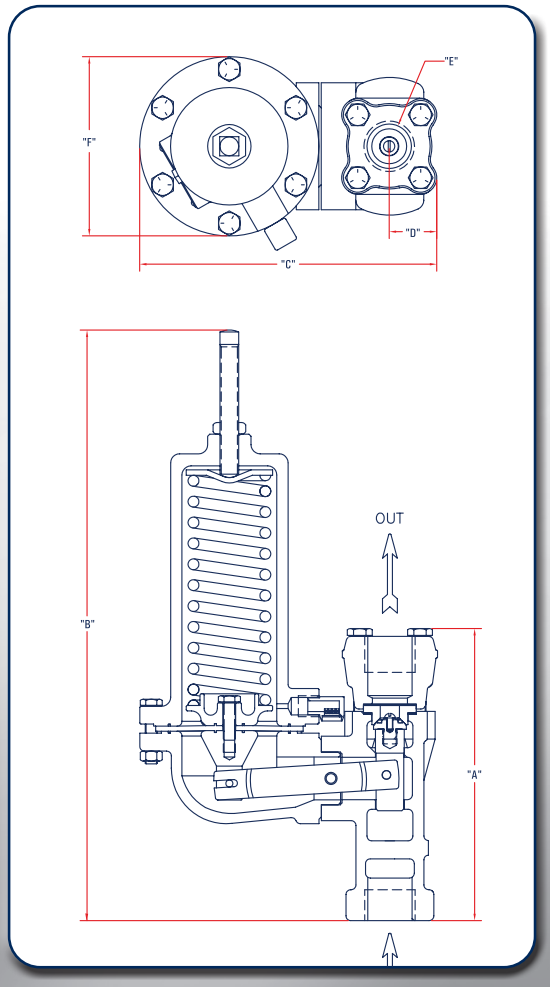

Specifications

Maximum Allowable Relief Inlet	Relief Pressure Setting Plus 250 PSIG	
Outlet	3–250 PSIG	
Body Sizes	1 NPT	
	2 NPT	
Outlet Ranges		
	3 – 8 PSIG	Low Pressure
	6 – 17 PSIG	
	15 – 22 PSIG	
	20 – 35 PSIG	
	35 – 50 PSIG	
	30 – 70 PSIG	High Pressure
	50 – 95 PSIG	
	75 – 175 PSIG	
	150 – 250 PSIG	
Temp. Range	–20° to 150°F	–29° to 66°C
Orifice Size	1/2"	
Weight Approximate		
1"	20 lbs	9 kg
2"	25 lbs	11.25 kg

Body Size		A	B	C	D	E	F
1" P630R High Pressure	mm	193	391	198	29	1" NPT	119
	inches	7.61	15.39	7.79	1.15		4.67
2" P630R High Pressure	mm	211	398	215	45	2" NPT	119
	inches	8.31	15.66	8.45	1.90		4.67
1" P630R Low Pressure	mm	193	391	231	29	1" NPT	184
	inches	7.61	15.39	9.09	1.15		7.25
2" P630R Low Pressure	mm	211	398	248	45	2" NPT	184
	inches	8.31	15.66	9.75	190		7.25

P630R Parts

Item	Description		Part Number
1	Nameplate (requires 4 drive screws for mounting)		632-472-000
2	Drive Screw (4 required)		648-464-000
3	Adjusting Screw	Spring Ranges	
		3-8 PSIG	648-462-002
		6-17 PSIG	648-462-001
		15-22 PSIG	648-462-000
		20-35 PSIG	648-462-003
		35-50 PSIG	648-462-003
		30-70 PSIG	648-462-001
		50-95 PSIG	648-462-000
		75-175 PSIG	648-462-003
		150-250 PSIG	648-462-003
4	Hex Nut		634-000-056
5	Upper Spring Guide	Pressure Ranges: 3-8, 6-17, 15-22, 20-35, & 30-70, 50-95 & 75-175 PSIG	626-077-000
		Pressure Ranges: 35-50 & 150-250 PSIG	626-078-000
6	Bonnet - Iron (30-70 PSIG thru 150-250 PSIG)		604-204-000
	Bonnet - Steel (30-70 PSIG thru 150-250 PSIG)		604-205-000
	Bonnet - Iron (3-8 PSIG thru 35-50 PSIG)		604-233-000
	Bonnet - Steel (3-8 PSIG thru 35-50 PSIG)		604-234-000
7	Range Spring	3-8 PSIG	655-659-000
		6-17 PSIG	655-659-001
		15-22 PSIG	655-659-002
		20-35 PSIG	655-659-003
		35-50 PSIG	655-659-004
		30-70 PSIG	655-659-001
		50-95 PSIG	655-659-002
		75-175 PSIG	655-659-003
		150-250 PSIG	655-659-004
8	Diaphragm Screw		648-463-000
9	Lower Spring Guide	3-8 PSIG	626-095-000
		6-17 PSIG	
		15-22 PSIG	
		20-35 PSIG	
		35-50 PSIG	
		30-70 PSIG	637-304-000
		50-95 PSIG	
		75-175 PSIG	
		150-250 PSIG	637-305-000
10	Pressure Ranges: 3-8, 6-17, 15-22, 20-35, & 35-50 PSIG		
	Diaphragm	Neoprene	618-073-000
		Fluorocarbon (2 required)	618-073-001
	Pressure Ranges: 30-70, 50-95, 75-175, & 150-250 PSIG		
	Diaphragm	Neoprene	618-068-000
		Fluorocarbon (2 required)	618-068-001
11	Hex nut for the iron diaphragm housing	Pressure Ranges: 3-8, 6-17, 15-22, 20-35, & 35-50 PSIG (10 Required)	634-000-112
		Pressure Ranges: 30-70, 50-95, 75-175, & 150-250 PSIG (4 Required)	

Item	Description		Part Number
12	Build Screws	For the Iron Diaphragm Housing Ranges: 3-8, 6-17, 15-22, 20-35, & 35-50 PSIG (10 Required)	648-463-003
		For the Steel Diaphragm Housing Ranges: 3-8, 6-17, 15-22, 20-35, & 35-50 PSIG (10 Required)	648-463-007
		For the Iron Diaphragm Housing Ranges: 30-70, 50-95, 75-175, & 150-250 PSIG (4 Required)	648-463-003
		For the Steel Diaphragm Housing Ranges: 30-70, 50-95, 75-175, & 150-250 PSIG (4 Required)	648-463-005
13	Connector piston assembly Aluminum trim, NACE		827-006-000
	Connector piston assembly Stainless Steel trim, NACE		827-006-001
14	Diaphragm Housing	Iron (Ranges: 3-8, 6-17, 15-22, 20-35, & 35-50 PSIG)	629-224-000
		Steel (Ranges: 3-8, 6-17, 15-22, 20-35, & 35-50 PSIG)	629-225-000
		Iron (Ranges: 30-70, 50-95, 75-175, & 150-250 PSIG)	629-199-000
		Steel (Ranges: 30-70, 50-95, 75-175, & 150-250 PSIG)	629-200-000
15	Lever Assembly	(Ranges: 3-8, 6-17, 15-22, 20-35, & 35-50 PSIG)	827-010-000
		(Ranges: 30-70, 50-95, 75-175, & 150-250 PSIG)	827-003-000
		NACE units only (Ranges: 30-70, 50-95, 75-175, & 150-250 PSIG)	827-007-000
16	Pin		635-052-000
17	Gasket - Composite		624-056-000
18	Build screw	1" body (4 required)	648-463-004
		2" body (4 required)	648-463-006
19	Inlet adapter	1 NPT 1030 Carbon Steel	679-036-000
		2 NPT 1030 Carbon Steel	679-037-000
20	Body	1 NPT Iron	805-308-001
		1 NPT Steel	805-308-000
		2 NPT Iron	664-277-000
		2 NPT Steel	664-279-000
21	Body Gaskets Composite (2 required)		624-058-000
22	Orifice	1/2"	650-126-000
23	Seat Housing, SS		629-214-000
24	Valve Carrier		673-017-000
25	Build screw for steel diaphragm housing (2 required)		648-463-001
26	Vent protector assembly		836-004-000
27	Cap screws (Body to Housing) not shown		648-463-002
28	O-ring, Nitrile		649-292-000
	O-ring, Fluorocarbon		649-300-000
29	Housing Screw		648-486-000
30	Housing Plate		638-064-000

P630R High Flow Gas Relief Valve

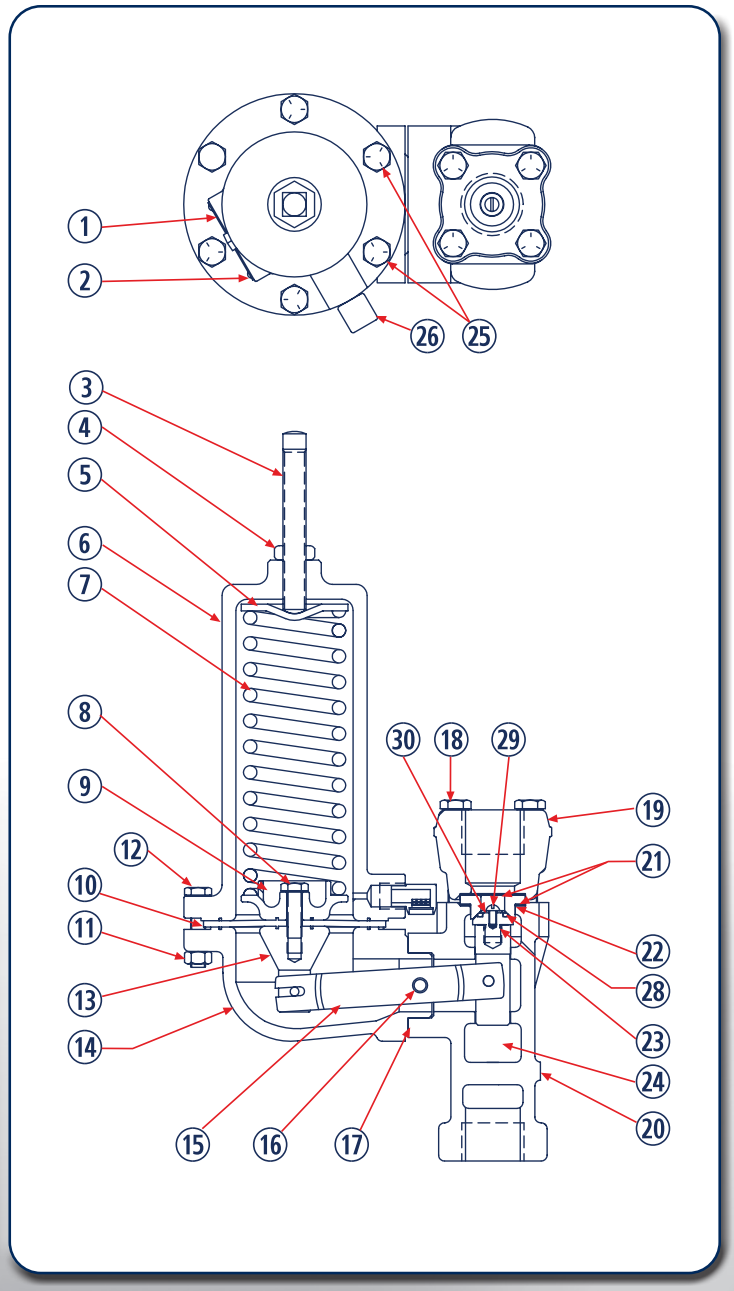

Relief Capacity Table - P630R High Pressure

Initial Relief Pressure Setting		Capacities, SCFH of 0.6 S.G. Natural Gas	
		10% Pressure Increase	20% Pressure Increase
PSIG	BAR	SCFH	SCFH
50	3.4	2900	7100
75	5.2	2700	7480
250	6.9	3260	9670
125	8.6	5500	14,200
175	12.1	5480	19,000
250	17.2	13,500	48,000

Note: Maximum working pressure above setting is 250 PSIG (17.2 BAR)

Relief Capacity Table - P630R Low Pressure

Initial Relief Pressure Setting		Capacities, SCFH of 0.6 S.G. Natural Gas	
		10% Pressure Increase	20% Pressure Increase
PSIG	BAR	SCFH	SCFH
5	0.35	640	2710
10	0.69	1420	2900
15	1.0	2000	4200
20	1.4	2130	4450
35	2.4	3030	7230
50	3.4	4900	14000

Note: Maximum working pressure above setting is 250 PSIG (17.2 BAR)

Spring Range

Spring Range	Adj. Screw (3)	Range Spring (7)	Spring Color Code
3 - 8 PSIG	648-462-002	655-659-000	Red Stripe
6 - 17 PSIG	648-462-001	655-659-001	Olive Drab
15 - 22 PSIG	648-462-000	655-659-002	Silver
20 - 35 PSIG	648-462-003	655-659-003	Green Stripe
35 - 50 PSIG	648-462-003	655-659-004	Blue Stripe
30 - 70 PSIG	648-462-001	655-659-001	Olive Drab
50 - 95 PSIG	648-462-000	655-659-002	Silver
75 - 175 PSIG	648-462-003	655-659-003	Green Stripe
150 - 250 PSIG	648-462-003	655-659-004	Blue Stripe

P630R Relief Valve Rebuild Kits

	Kit Includes	Part Number
Pressure Ranges: 30 - 70 PSIG thru 150-250 PSIG	Neoprene diaphragms, nitrile O-ring, seat housing assembly and 2 orifice gaskets	971-630-R00
Pressure Ranges: 30 - 70 PSIG thru 150-250 PSIG	Fluorocarbon diaphragms, fluorocarbon O-ring, seat housing assembly and 2 orifice gaskets	971-630-R01
Pressure Ranges: 3 - 8 PSIG thru 35 - 50 PSIG	Low pressure Neoprene diaphragm, nitrile O-ring, seat housing assembly and 2 orifice gaskets	971-630-R02
Pressure Ranges: 3 - 8 PSIG thru 35 - 50 PSIG	Low pressure fluorocarbon diaphragms, fluorocarbon O-ring, seat housing assembly and 2 orifice disks	971-630-R03

P289 Back Pressure Regulator

- Throttling Type Relief
- Compact
- Tight Shutoff
- High Flow Rates
- Reliability Due to Simplicity

The Type P289 Back Pressure Regulator functions as a high flow relief valve with an adjustable set point. The P289 can be used in place of a standard relief valve to provide protection against over pressurization in the downstream system. The design of a large diaphragm area and a pitot tube booster allow the valve to respond quickly and relieve the excessive pressure smoothly, especially in low-pressure settings.

Applications

- Fuel Gas Relief
- Gas Gathering Relief

Materials of Construction

	P289 1" & 3/4" x 1"	L289 & P289 2"
Body, Bonnet	Aluminum	L289 - Aluminum Body with Aluminum Bonnet P289 - Cast Iron Body with Aluminum Bonnet
Diaphragm	Nitrile or Fluoroelastomer	Nitrile or Fluoroelastomer
Gaskets	Neoprene	Neoprene/Composite
O-rings	Nitrile or Fluoroelastomer	Nitrile or Fluoroelastomer
O-ring Piston and Spacer	Aluminum	N/A
Seat Washer	N/A	Stainless Steel
Pitot Tube	Aluminum	Brass or Stainless Steel
Main Seat	N/A	Brass or Stainless Steel
Spring	Zinc-plated steel	Zinc-Plated Steel
Diaphragm Piston	Zinc-plated steel	Zinc-Plated Steel
Closing Cap	N/A	Acetal

Specifications

	P289 1" & 3/4" x 1"		P289 2" & L289	
Port Size	1 NPT		2 NPT	
Maximum Relief Inlet Pressure	100 PSIG	6.9 BAR	25 PSIG	1.7 BAR
Relief Set Pressure Ranges	1-4.5 PSIG	.07-0.3 BAR	7-18" W.C.	0.017–0.045 BAR
	4-15 PSIG	.28-1.0 BAR	0.5-2.25 PSIG	0.035–0.16 BAR
	10-20 PSIG	0.7-1.4 BAR	1.75-7 PSIG	0.12–0.5 BAR
	15-50 PSIG	1-3.5 BAR	4-10 PSI	0.28–0.7 BAR
	45-75 PSIG	3.1-5.2 BAR		
Temperature Range	-20–150°F with Nitrile and Neoprene		-20–150°F with Nitrile and Neoprene Elastomers	
	0–300 °F with Fluoroelastomer		0–300°F with Fluoroelastomer	

L289 Part Matrix

L289			0					9	
									Body Size
	05								3/4" x 2" NPT
	11								1" x 2" NPT
	16								2" x 2" NPT
									Spring Range
									W.C. or PSIG / mBAR
		051							5 - 10" W.C. / 12.45 - 24.90
		001							7 - 18" W.C. / 17.43 - 44.83
		003							12 - 40" W.C. / 29.89 - 99.63
		002							0.5 - 2.25 PSIG / 34.47 - 155.03
		007							1.75 - 7 PSIG / 120.65 - 482.63
		010							4 - 10 PSIG / 275.79 - 689.47
									Main Seat Material
				0					Brass
				1					Stainless Steel
									O-ring Material
					0				Nitrile
					1				Fluoroelastomer
									Diaphragm Material
						0			Nitrile
						1			Fluoroelastomer
									Pilot Tube Material
							0		Brass
							1		Stainless Steel
									Body Material
								9	Aluminum

P289 1" Part Matrix

P289			0	0	0			0	
									Body Size
	07								3/4" x 1" NPT
	08								1" NPT
									Spring Range
									PSIG / BAR
		004							1 - 4.5 / 0.07 - 0.3
		015							4 - 15 / 0.3 - 1.0
		020							10 - 20 / 0.69 - 1.4
		050							15 - 50 / 1.0 - 3.4
		075							45 - 75 / 3.1 - 5.2
									O-ring Material
						0			Nitrile
						1			Fluoroelastomer
									Diaphragm Material
							0		Nitrile
							1		Fluoroelastomer

P289 2" Part Matrix

P289	16		0	0					
									Body Size
	16								2" NPT
									Spring Range
									W.C. or PSIG / BAR
		001							7 - 18" W.C. / 0.02 - .05
		002							0.5 - 2.25 PSIG / 0.04 - 0.16
		007							1.75 - 7 PSIG / 0.12 - 0.48
		010							4 - 10 PSIG / 0.28 - 0.7
									Main Seat Material
				0					Brass
				1					Stainless Steel
									O-ring Material
					0				Nitrile
					1				Fluoroelastomer
									Diaphragm Material
						0			Nitrile
						1			Fluoroelastomer
									Pilot Tube Material
							0		Brass
							1		Stainless Steel

P289 1" Parts

Item	Description		Qty.	Part Number
1	Adjusting Screw, Plated Steel		1	648-487-000
2	Hex Nut, Plated Steel		1	634-154-000
3	Spring Guide, plated steel		1	626-079-000
4	Spring	1–4.5 PSIG (0.1–0.3 BAR), Pink	1	655-688-000
		4–15 PSIG (0.3–1 BAR), Red		655-689-000
		10–20 PSIG (0.7–1.4 BAR), Silver		655-676-000
		15–50 PSIG (1–3.4 BAR), & 45–75 PSIG (3.1–5.2 BAR), Green		655-690-000
5	Piston Retainer, Plated Steel		1	643-191-000
6	Piston,	Plated Steel (All Output Pressures other than 45-75 PSIG)	1	637-306-000
		Range 45-75 PSIG		637-319-000
7	Dia-phragm	P289 1" Nitrile	1	600-497-000
		P289 1" Fluoroelastomer		600-497-001
8	Stem Guide Assembly		1	814-014-000
9	Pipe Plug, Plated Steel		1	639-099-000
10	Spacer Tube, Stainless Steel		1	654-178-000
11	O-ring	Nitrile	2	649-000-003
		Fluoroelastomer		649-000-343
12	Pitot Tube, Aluminum		1	660-051-000
13	Retaining Ring, plated steel		1	644-051-000
14	Screen, Stainless Steel		1	647-018-000
15	Gasket, Neoprene		1	624-063-000
16	Body, Aluminum, 1" NPT		1	664-295-000
	Body, Aluminum, 3/4" x 1" NPT			664-386-000
17	O-ring	Nitrile	1	649-293-000
		Fluoroelastomer		649-293-001
18	O-ring Spacer, Aluminum		1	654-177-000
19	O-ring Piston, Aluminum		1	637-311-000
20	Machine Screw, Stainless Steel		2	648-488-000
21	Gasket, Composite		2	624-062-000
22	Machine Screw		8	648-466-005
23	Washer, Steel		1	662-204-000
24	Hex Nut, Plated Steel		1	634-162-000
25	Bonnet, Aluminum		1	604-221-000

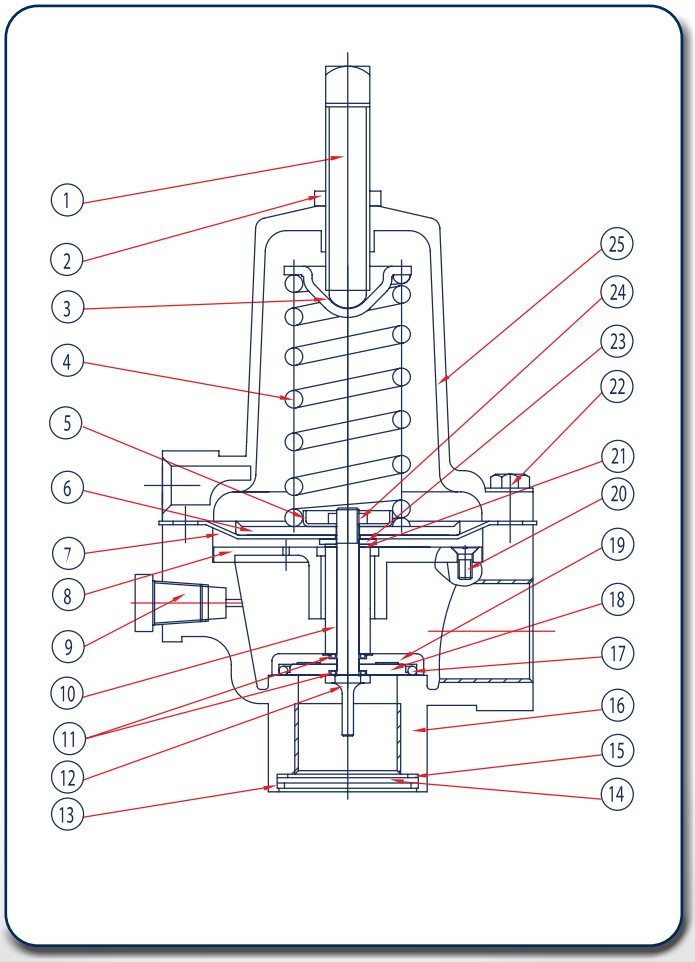

P289 1" Dimensions

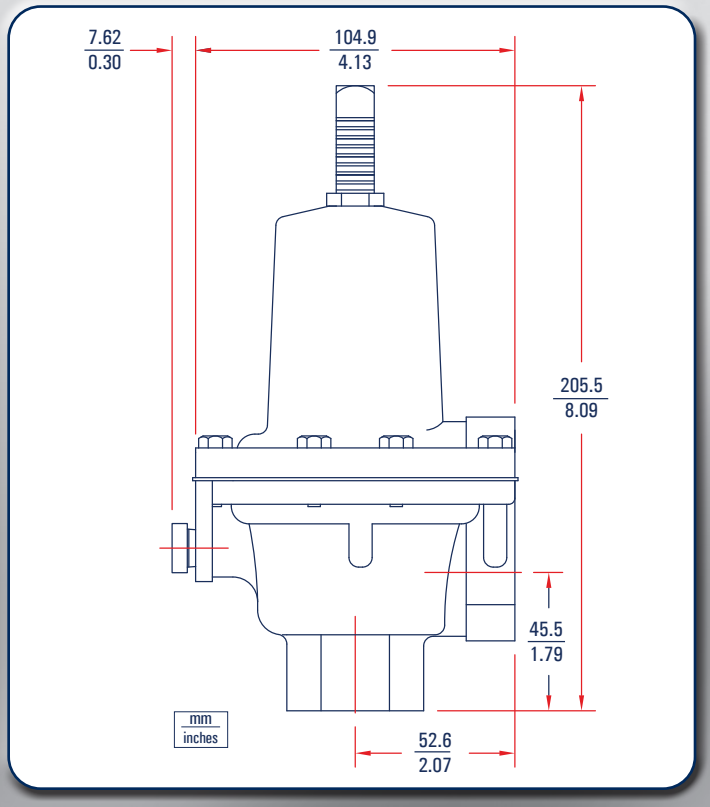

P289 1" & 3/4" x 1" Regulator Rebuild

	Kit Includes	Part Number
P289 1"	Nitrile Diaphragms, Screen & Gasket	971-289-000
P289 1"	Fluorocarbon Diaphragm, Screen & Gasket	971-289-001

L289 & P289 2" Parts

Item	Description		Qty.	Part Number
1	Gasket, Neoprene		1	624-066-000
2	Screen, Stainless Steel		1	647-020-000
3	Seat Gasket, Neoprene		1	624-071-000
4	Main Seat	Brass	1	650-132-000
		Stainless Steel		650-133-000
5	O-ring	Nitrile	1	649-302-000
		Fluoroelastomer		649-301-000
6	O-ring, Washer, Stainless Steel		1	662-207-000
7	Stem Guide Assembly, Cast Iron & Brass		1	814-015-000
8	Upper Pipe Plug		1	639-102-000
9	Diaphragm Head, Plated Steel		1	637-315-000
10	Lower Spring Retainer, Zinc Plated Steel		1	643-197-000
11	Spring	5 to 10" W.C. , Olive	1	655-732-001
		7 to 18" W.C. , Dark Blue		655-691-000
		12 to 40" W.C. , White		655-767-000
		0.5 to 2.25 PSIG (.03 to .15 BAR), Grey		655-692-000
		1.75 to 7 PSIG (.12 to .48 BAR), Dark Green		655-693-000
		4 to 10 PSIG (.27 to .69 BAR), Red Stripe		655-694-000
12	Bonnet, Aluminum		1	604-558-000
13	Closing Cap Gasket, Neoprene		1	624-069-000
14	Closing Cap, Acetal		1	610-056-000
15	Adjusting Screw, Zinc		1	648-499-000
16	Upper Spring Seat Washer, Aluminum		1	662-206-000
17	Hex Nut, Plated Steel		1	634-173-000
18	Pitot Tube	Brass	1	660-053-000
		Stainless Steel		660-054-000
19	Machine Bolt, Stainless Steel		8	648-466-000
20	Dia-phragm	Nitrile	1	618-071-000
		Fluoroelastomer		618-071-001
21	Machine Screw, Stainless Steel		4	648-500-000
22	Low Pipe Plug, Plated Steel		1	639-099-000
23	Snap Washer, Plated Steel		1	662-208-000
24	Spacer	Brass	1	654-181-000
		Stainless Steel		654-182-000
25	Gasket, Neoprene		3	624-065-000

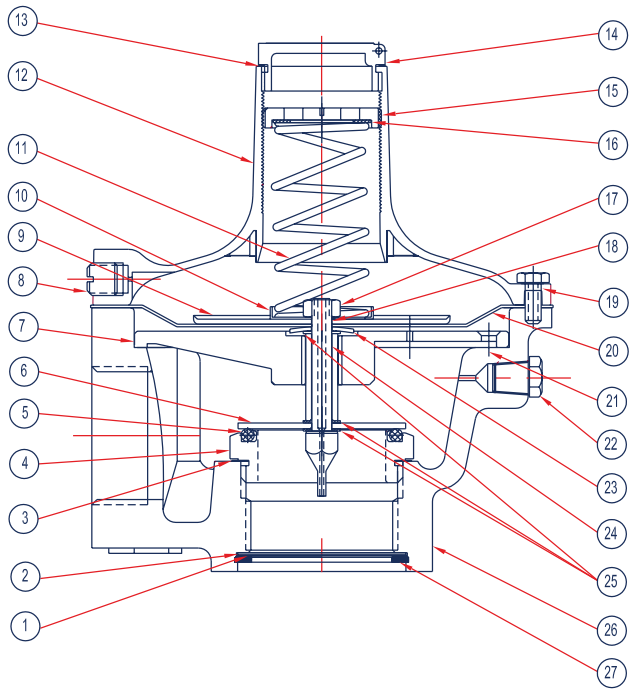

P289 2" Dimensions

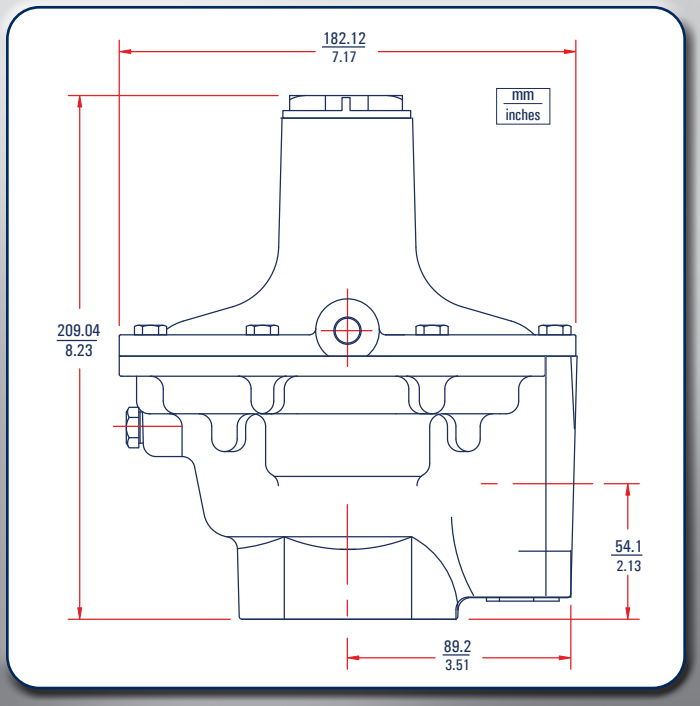

P289 2" Regulator Rebuild Kits

	Kit Includes	Part Number
P289 2"	Nitrile Diaphragms, Screen, Screen Gasket (Neoprene), Composite Gaskets (Qty.3)	971-289-002
P289 2"	Fluorocarbon Diaphragm, Screen, Screen Gasket (Neoprene), Composite Gaskets (Qty. 3)	971-289-003

L289 & P289 Flow Rates

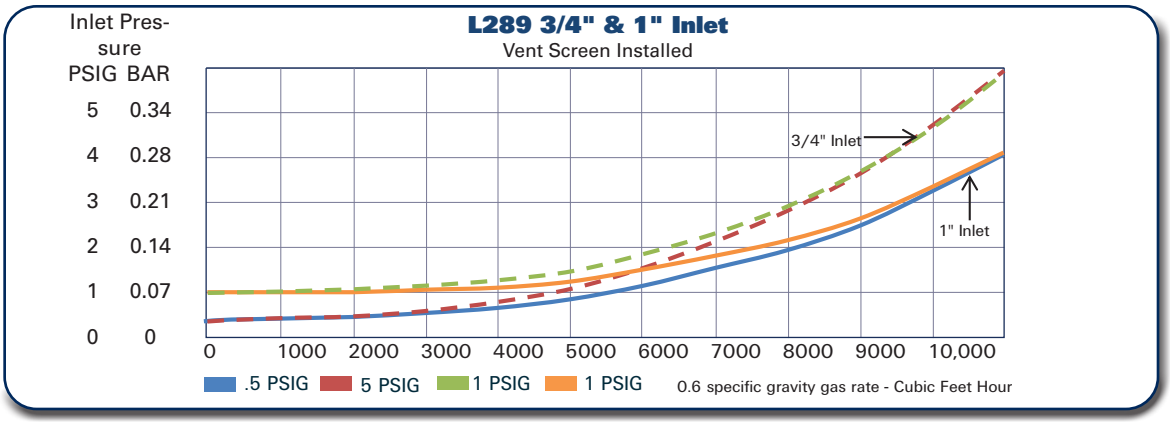

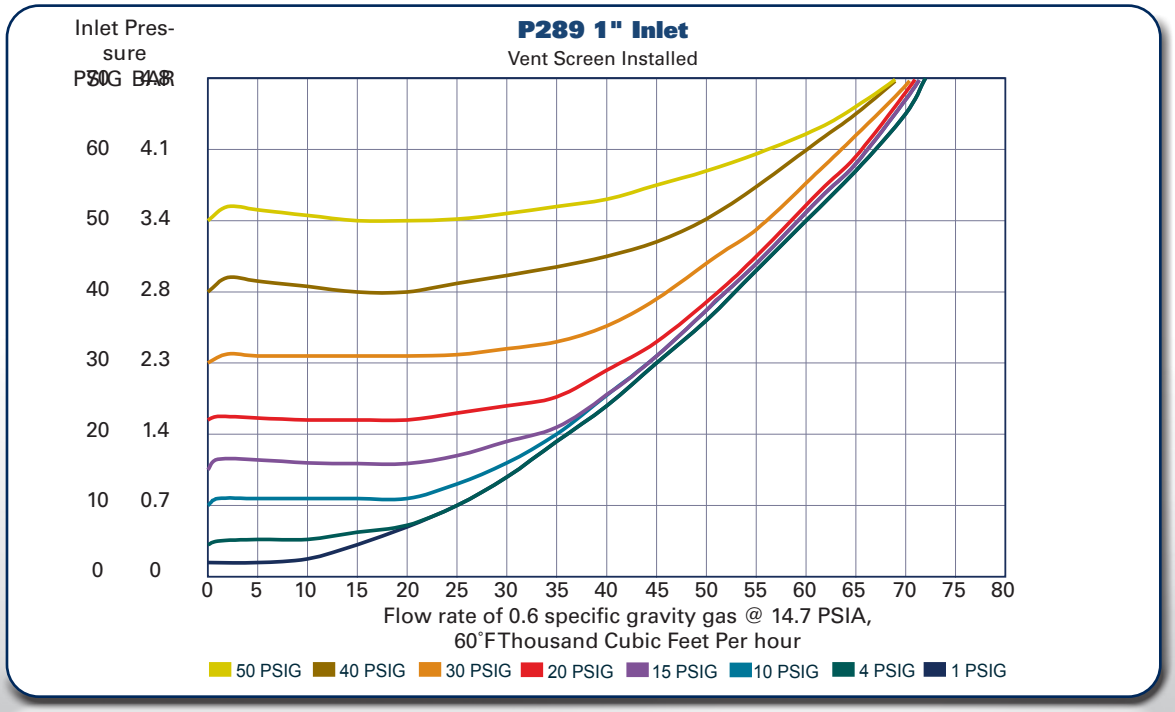

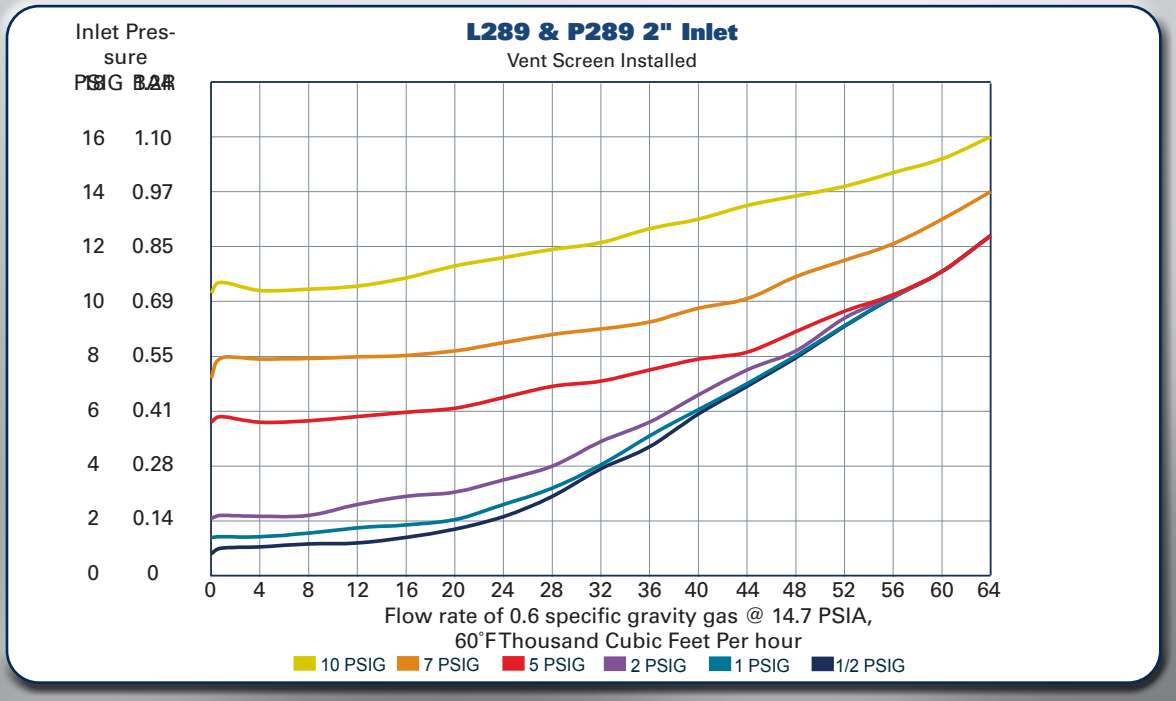

F289 Pilot Operated Back Pressure Regulator

- Throttling Type Relief
- Compact
- Tight Shutoff
- High Flow Rates
- Reliability Due to Simplicity

The Type F289 is a Pilot Operated Back Pressure Regulator that functions as a high flow relief valve with an adjustable set point. The F289 can be used in place of a standard relief valve to provide protection against over pressurization in the downstream system. The pilot regulator allows for accurate back pressure control with minimal buildup over the set pressure for full opening of the main valve.

Applications

- Fuel Gas Relief
- Gas Gathering Relief

Specifications

	F289 1"		F289 2"	
Port Size	1 NPT		2 NPT	
Maximum Relief Inlet Pressure	50 PSIG above max output or 110 PSIG Max.	7.6 BAR	15 PSIG	1.0 BAR
Relief Set Pressure Ranges	10 - 18 PSIG	.7-1.2 BAR	14" - 2 PSIG	.04 - .14
	18 - 30 PSIG	1.2-2.1 BAR	2 - 10 PSIG	.14 - .7
	30 - 100 PSIG	2.1-6.9 BAR		
Temperature Range	-20–150 °F with Nitrile and Neoprene		-20–150 °F with Nitrile and Neoprene Elastomers	
	0–300 °F with Fluoroelastomer		0–300 °F with Fluoroelastomer	
Approximate Weight	2.5 lbs.	1.133 kg	15.5 lbs.	7.030 kg

Materials of Construction

	F289 1"	F289 2"
Body, Bonnet	Aluminum	Cast Iron Body with Aluminum Bonnet
Diaphragm	Nitrile or Fluoroelastomer	Nitrile or Fluoroelastomer
Gaskets	Neoprene	Neoprene/Composite
O-rings	Nitrile or Fluoroelastomer	Nitrile or Fluoroelastomer
O-ring Piston and spacer	Aluminum	N/A
Seat Washer	N/A	Stainless Steel
Pitot Tube	Aluminum	Brass or Stainless Steel
Main Seat	N/A	Brass or Stainless Steel
Spring	Zinc-plated steel	Zinc-Plated Steel
Diaphragm Piston	Zinc-plated steel	Zinc-Plated Steel

F289 1" Part Matrix

F289			0	0	0	0		0	
									Body
	07								3/4" x 1" NPT
	08								1" x1" NPT
									Output Ranges
									PSIG / BAR
		018							10 - 18 / 0.7 - 1.3
		030							18 - 30 / 1.3 - 2.1
		100							30 - 100 / 2.1 - 7.0
			0	0	0	0			
									O-ring / Diaphragm Material
							0		Nitrile (NBR)
							1		Fluoroelastomer (FKM)
								0	

F289 2" Part Matrix

F28916		0	0	0	0			
								Output Ranges
								W.C. or PSIG / BAR
	002							14" W.C - 2 PSIG / 0.04 - 0.14
	010							2 - 10 PSIG / 0.14 - 0.7
								O-ring / Diaphragm Material
						0		Nitrile (NBR)
						1		Fluoroelastomer (FKM)
								Trim Material
						0		Brass
						1		Stainless Steel

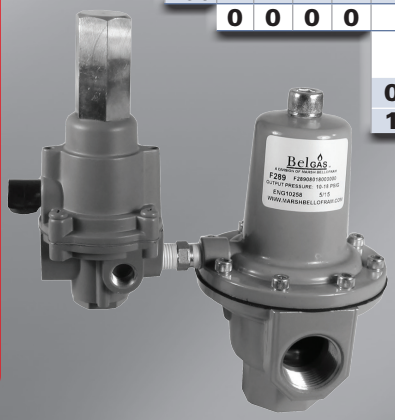

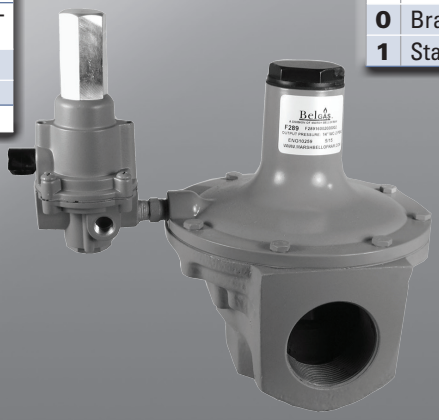

F289 1 NPT Main Valve Capacities and PL82 Pilot

Main Valve Spring Part Number, and Color	Set Pressure Range		Set Pressure[1]		Build-up Over Set Pressure to Begin Opening Main Valve[2]		Build-up Over Set Pressure to Fully Open Main Valve[3]		Pressure Drop Below Set Pressure to Reseat Pilot		Capacities of 0.6 Specific Gravity Natural Gas[4]	
	PSIG	BAR	PSIG	BAR	PSIG	BAR	PSIG	BAR	PSIG	BAR	SCFH	Nm^3/h
For set pressures up to 30 psig / 2.1 bar	10 to 18	0.69 to 1.2	10	0.69	0.8	0.055	1.0	0.07	1.0	0.07	23,000	616
			15	1.0							29,000	777
			18	1.2							32,000	858
	18 to 30	1.2 to 2.1	18	1.2	0.9	0.062	1.2	0.08	1.0	0.07	32,000	858
			25	1.7							39,000	1,045
			30	2.1							44,000	1,179
For set pressures over 30 psig / 2.1 bar	30 to 100	2.1 to 7.0	30	2.1	1.4	0.10	1.9	0.13	1.0	0.07	44,000	1,179
			40	2.8							54,000	1,447
			50	3.4							64,000	1,715
			60	4.1							73,000	1,956
			70	4.8	1.6	0.11	2.1	0.14	1.0	0.07	83,000	2,224
			80	5.5							92,000	2,466
			90	6.2							102,000	2,734
			100	7.0							111,000	2,975

1. Set pressure is defined as the pressure at which the pilot exhaust starts to bubble (discharge).
2. Crack pressure is the inlet pressure at which the main valve starts audible flow.
3. Inlet pressure buildup over the set pressure to achieve wide-open capacity.
4. Capacities with inlet piping equal to body size and without outlet piping.

F289 2 NPT Main Valve Capacities and PL83 & PL82 Pilot

Relief Set Pressure Range, Spring Part Number, and Color	Set Pressure[1]		Buildup Over Set Pressure to Fully Open Main Valve[2]		Pressure Drop Below Set Pressure to Reseat Pilot		Capacities of 0.6 Specific Gravity Natural Gas[3]	
	PSIG	BAR	PSIG	mBAR	PSIG	mBAR	SCFH	Nm^3/h
14-inches w.c. to 2 PSIG (35 mbar to 0.14 BAR) **PL83**	0.5	0.03	0.25	17	0.25	17	18,700	501
	1.0	0.07					24,000	643
	1.5	0.10					28,400	761
	2.0	0.14					32,100	860
2 to 10 PSIG (0.14 to 0.69 BAR) **PL82**	2.0	0.14	0.30	21	0.30	21	32,500	871
	4.0	0.28					44,300	1,187
	6.0	0.41					53,700	1,439
	8.0	0.55					62,000	1,662
	10.0	0.69					69,500	1,863

1. Set pressure is defined as the pressure at which the pilot exhaust starts to bubble (discharge).
2. Inlet pressure buildup over the set pressure to achieve wide-open capacity.
3. Capacities with inlet piping equal to body size and without outlet piping.

F289 Wide Open Flow Coefficients

1 NPT Main Valve				2 NPT Main Valve			
Inlet Piping Size	C_g	C_v	C_1	Inlet Piping Size	C_g	C_v	C_1
Line Size Equals Body Size [1-inch (25 mm) Inlet Piping]	740	23.1	32	Line Size Equals Body Size [2-inch (51 mm) Inlet Piping]	2,290	73.4	31.2
2:1 Line Size to Body Size Piping [2-inch (51 mm) Inlet Piping]	560	17.5		2:1 Line Size to Body Size Piping [4-inch (102 mm) Inlet Piping]	2,050	65.7	

F289 1" Parts

Item	Description		Qty.	Part Number
1	Body	1" Aluminum	1	664-295-000
		3/4" x 1" Aluminum		664-386-000
2	Dia-phragm Assembly	Nitrile	1	804-240-002
		Fluoroelastomer		804-240-003
3	Pipe Plug, Plated Steel		1	639-099-000
4	Machine Screw		8	648-466-005
5	Range Spring	10 - 30 PSIG, Pink	1	655-688-000
		30 - 100 PSIG, Red		655-689-000
6	Spring Guide, Steel		1	626-079-000
7	Gasket, Copper		1	624-090-000
8	Adjustment Screw, Plated Steel		1	648-554-000
9	Bonnet, Aluminum		1	604-237-000
10	Machine Screw, Stainless Steel		2	648-488-000
11	Gasket, Neoprene		1	624-063-000
12	Screen, Stainless Steel		1	647-018-000
13	Retaining Ring, Steel		1	644-051-000
14	1/4" to 1/4" Pipe Nipple		1	622-056-000
15	PL82 Pilot	10-18 PSI, Nitrile	1	832-833-018
		10-18 PSI, Fluoroelastomer		832-833-021
		18-30 PSI, Nitrile		832-833-033
		18-30 PSI, Fluoroelastomer		832-833-035
		30-100 PSI, Nitrile		832-833-020
		30-100 PSI, Fluoroelastomer		832-833-023

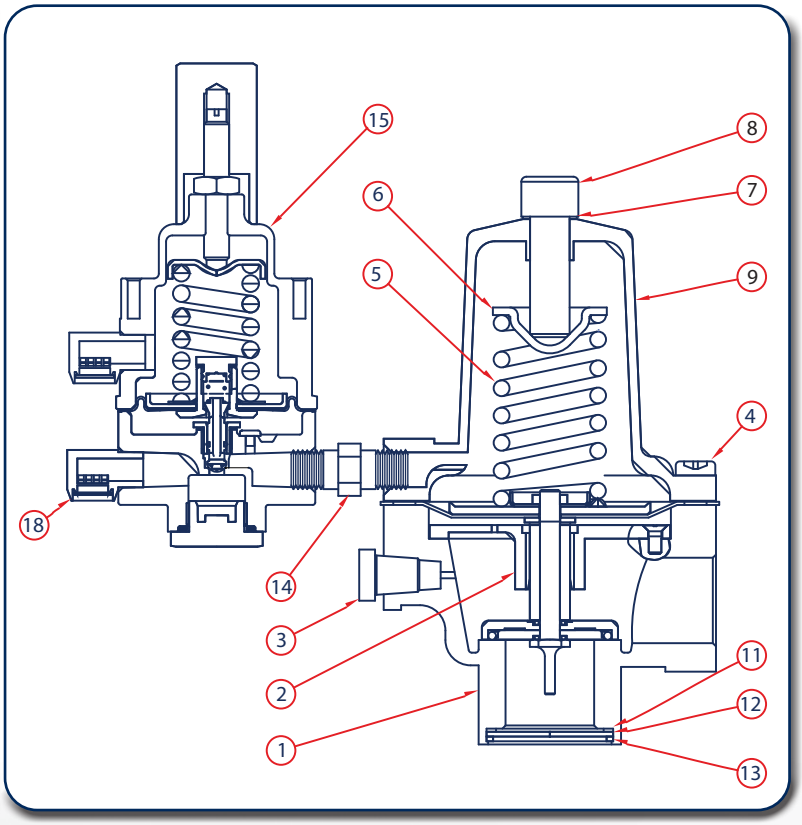

F289 1" Regulator Rebuild Kits

	Kit Includes	Part Number
F289 1"	Nitrile Diaphragms, Screen, Gasket & O-rings	971-289-004
F289 1"	Fluorocarbon Diaphragm, Screen, Gasket & O-rings	971-289-005

F289 1" Pilot Dimensions

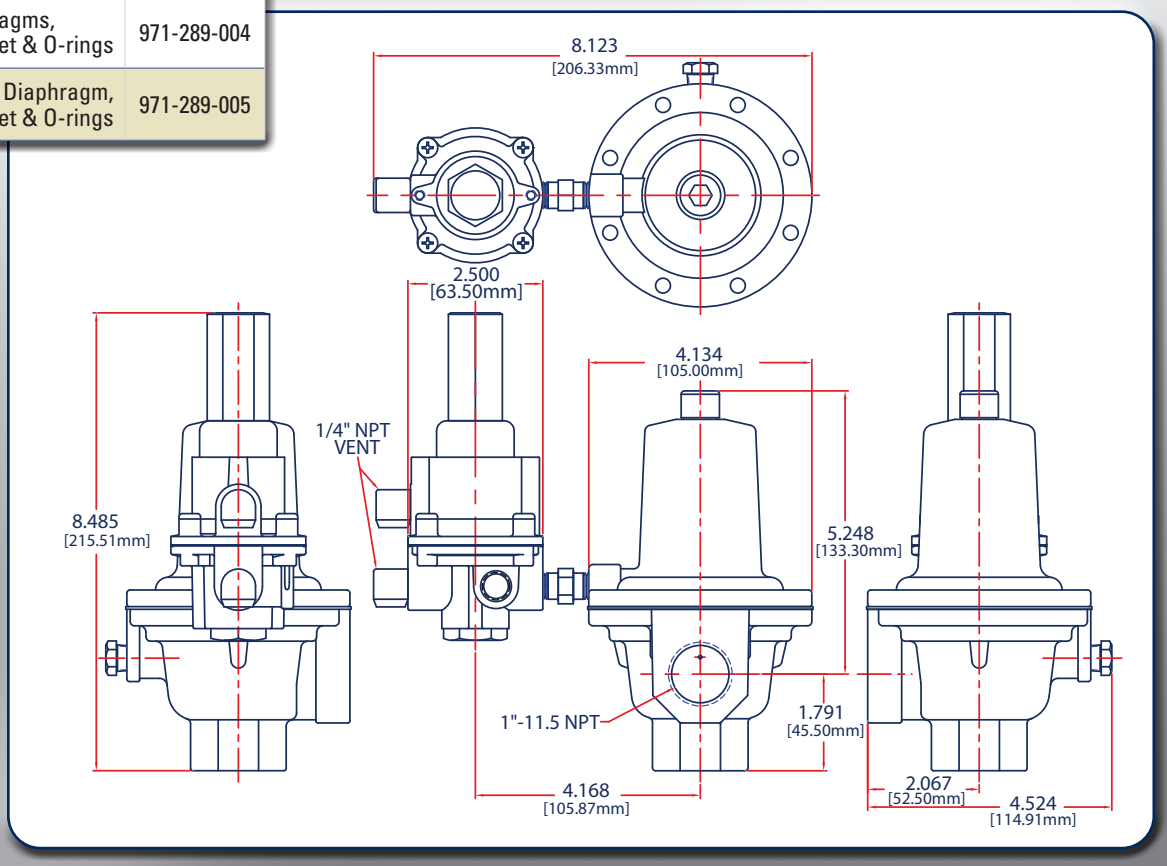

F289 2" Parts

Item	Description		Qty.	Part Number
1	Gasket, Neoprene		1	624-066-000
2	Screen, Stainless Steel		1	647-020-000
3	Body	3/4" x 2" Aluminum	1	664-303-000
		1" x 2" Aluminum		664-303-001
		2" x 2" Aluminum		664-303-002
		2" x 2" Iron		664-302-000
4	Main Seat	Brass	1	650-132-000
		Stainless Steel		650-133-000
5	O-Ring	Nitrile	1	649-302-000
		Fluoroelastomer		649-301-000
6	PL82/ PL83 Pilot	PL82 2-10 PSI, Nitrile	1	832-833-032
		PL82 2-10 PSI, Fluoroelastomer		832-833-034
		PL83 14"-2 PSI, Nitrile		833-032-000
		PL83 14"-2 PSI, Fluoroelastomer		833-032-001
7	1/4" to 1/4" Pipe Nipple		1	622-056-000
8	Spring	14" W.C. - 2 PSIG White	1	655-751-000
		2 - 10 PSIG Blue		655-691-000
9	Bonnet, Aluminum		1	604-268-000
10	Closing Cap Gasket, Neoprene		1	624-069-000
11	Closing Cap		1	610-071-000
12	Adjusting Screw, Zinc		1	648-499-000
13	Upper Spring Seat Washer, Aluminum		1	662-206-000
14	Machine Bolt, Stainless Steel		8	648-466-000
15	Machine Screw, Stainless Steel		4	648-500-000
16	Low Pipe Plug, Steel		1	639-099-000
17	Seat Gasket, Neoprene		1	624-071-000
18	Retaining Ring, Steel		1	644-054-000
19	Pitot Tube	Brass	1	660-053-000
		Stainless Steel		660-054-001
20	Gasket, Neoprene		3	624-065-000
21	O-Ring, Washer, Stainless Steel		1	662-207-000
22	Spacer	Brass	1	654-181-000
		Stainless Steel		654-182-000
23	Diaphragm Head, Steel		1	637-315-000
24	Hex Nut, Steel		1	634-173-000
25	Snap Washer, Steel		1	662-208-000
26	Lower Spring Retainer, Zinc Plated Steel		1	643-197-000
27	Dia-phragm	Nitrile	1	618-071-000
		Fluoroelastomer		618-071-001

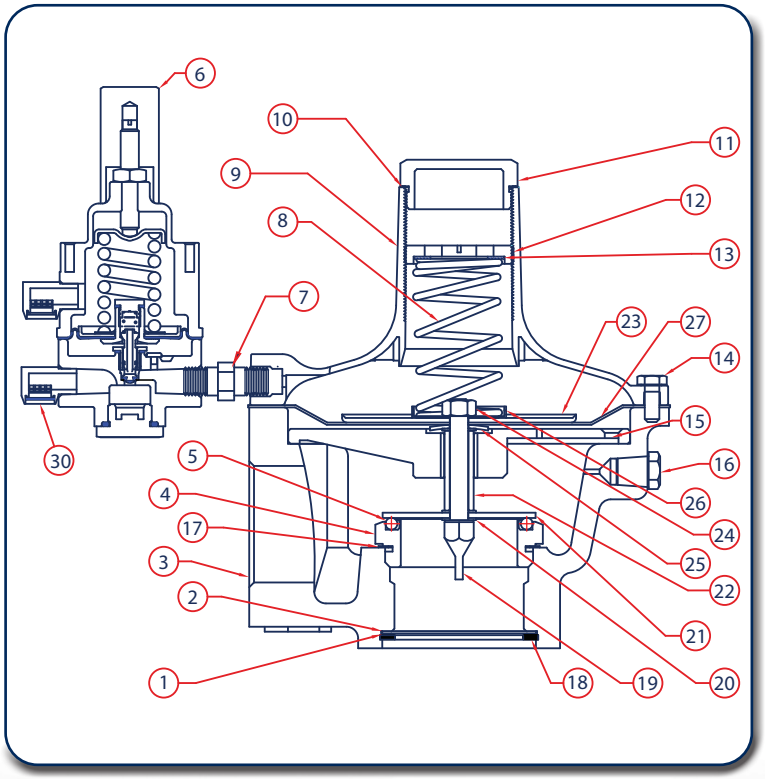

F289 2" Regulator Rebuild Kits

	Kit Includes	Part Number
F289 2"	Nitrile Diaphragms, Screen, Screen Gasket (Neoprene), Composite Gaskets	971-289-006
F289 2"	Fluorocarbon Diaphragm, Screen, Screen Gasket (Neoprene), Composite Gaskets	971-289-007

F289 2" Dimensions

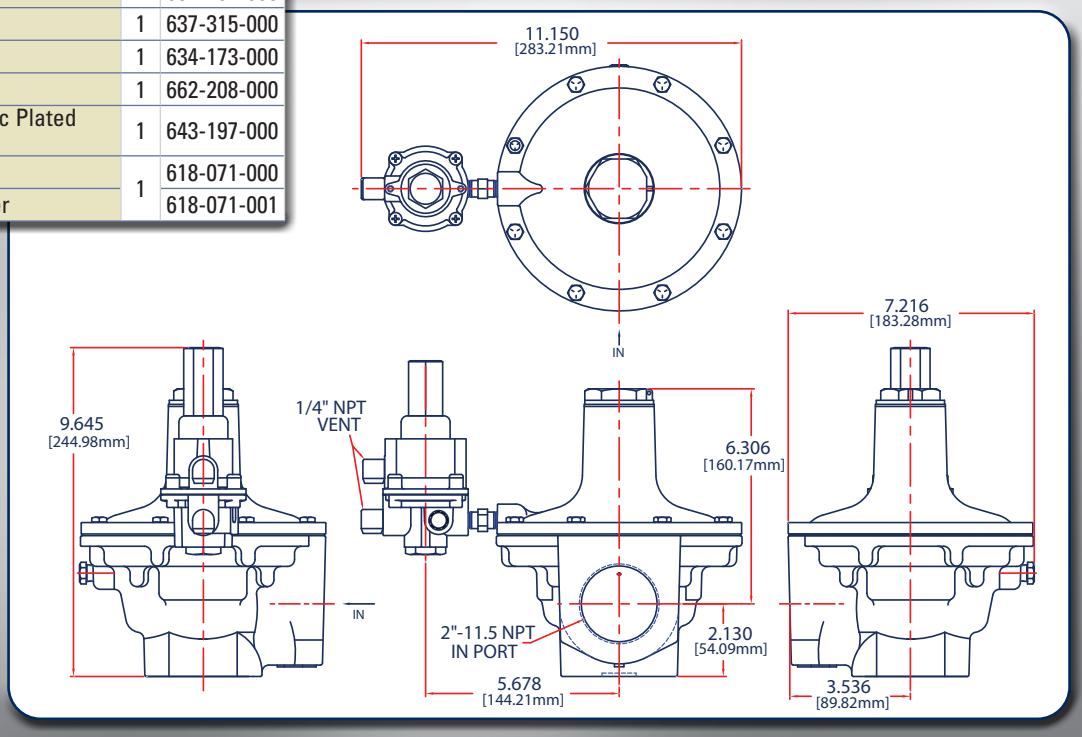

P1808 Pilot-Operated Relief Valve or Backpressure Regulators

The P1808 pilot-operated relief valve or back pressure regulator is used in gas or liquid service to maintain pressure on oil and gas separators, and in pressure relief applications in gas distribution systems. The function of the P1808 is controlled by the type of pilot installed on the unit. A PL82 series pilot regulator is used in back pressure applications, and only bleeds when repositioning the main valve. A PL82B series regulator is used in pressure relief applications, and exhausts the entire time the inlet pressure is above the set pressure. This allows the unit to achieve wide-open flow more easily. The unit controls pressures from 3 to 125 PSIG (0.21 to 8.6 Bar), and the set pressure can be adjusted for individual requirements by the adjusting screw on the pilot.

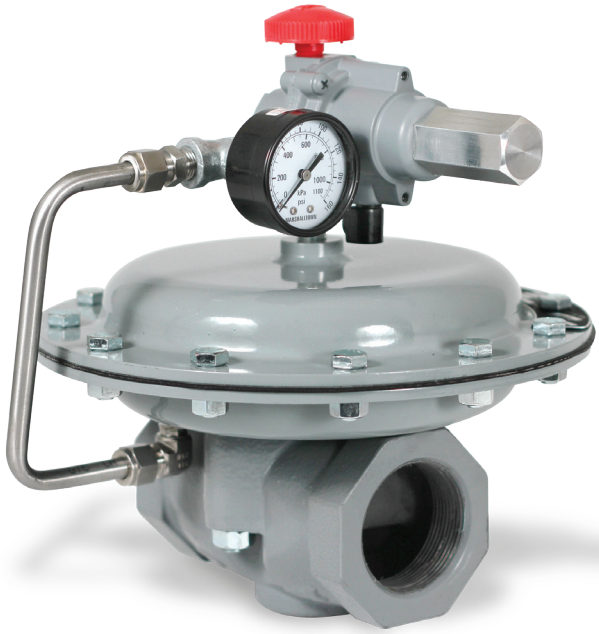

Applications

- Gas or Liquid Service
- Gas Separators
- Distribution Relief Device

Features

- Compact Design
- Pilot Operated
- High Flow Capacity

P1808 Part Matrix

P1808	**16**								
	16								2" NPT Standard
									Output Pressure Ranges
								PSIG	BAR
		018						3 - 18	0.206 - 1.240
		040						15 - 40	1.034 - 2.757
		125						35 - 125	2.413 - 8.618
									Regulator Setup
			B						Back Pressure Regulator
			R						Relief Valve
									Accessories
				0					None
				1					Gauge
				2					Filter
				3					Filter and Gauge
									Pilot Trim
					0				Nitrile
					2				Fluorocarbon
									Upstream Control
						0			No
						1			Yes
									Body Material
							0		Cast Iron
							2		WCB Steel
							3		Cast Iron 90° Angle

Materials of Construction

Body, Bonnet, Diaphragm Case	
P1808 Body	Ductile Iron or WCB Steel
Diaphragm Plates and Diaphragm Casings	Zinc-plated steel
Diaphragm	Nitrile (NBR)
O-Rings	Nitrile (NBR)
Gaskets	Nylon
Backup Rings	Polytetrafluoroethylene (PTFE)
Spring	Zinc-plated Steel (Standard)
Valve Plug Guide	Stainless Steel
PL82 Series Pilot	
Body	Aluminum
Spring Case	Aluminum
Body Plug	Aluminum
Valve Plug	Nitrile (NBR)
Spring	Zinc-plated Steel
Diaphragm	Nitrile (NBR) or Fluorocarbon (FKM)
Spring Seat	Zinc-plated Steel
Stem Guide	Stainless Steel
Adjusting Screw	Zinc-plated Steel
O-Rings	Nitrile (NBR) or Fluorocarbon (FKM)
Closing Cap	Aluminum
Connector Cap	Stainless Steel
Mounting Parts	
Tubing	Stainless Steel
Fittings	Stainless Steel
Pipe Tees	Stainless Steel
Pipe Nipples	Stainless Steel
Options	
Upstream control line construction	
Pressure gauge (0 to 160 PSIG / 0 to 11.0 BAR / 0 to 1.1 MPa)	
P590 Series Pilot Supply Filter	
Approximate Weights	

P1808 Flow and Sizing Coefficients

Type	Flow Coefficients (Wide-Open)		C_1	K_m	IEC Sizing Coefficients		
	C_g	C_v			X_T	F_L	F_D
1808	1410	40.1	35.2	0.79	0.78	0.89	0.50
1808 with Angle Body	1800	51.4	35	0.76	0.78	0.87	0.50

P1808 Inlet Pressure

Maximum Inlet Pressure	150 PSIG

P1808 Capacities[1] Using Internal Control Line and a Pilot with High-Gain Restriction

Relief Pressure Setting		Capacity in Thousands of SCFH (Nm3/h) of 0.6 Specific Gravity Natural Gas						
		Pressure Build-up in PSIG Over Relief Pressure Setting						
PSIG	BAR	2	6	10	15	20	25	30
5	0.34	32	46	50	61	70	80	89
12	0.83	41	55	65	74	84	93	102
20	1.4	56	73	80	89	99	108	117
30	2.1	67	89	99	108	117	127	136
40	2.8	85	105	120	127	136	145	154
50	3.5	94	120	137	145	154	163	172
60	4.1	--	135	152	163	172	181	190
70	4.8	--	150	168	161	190	200	209
80	5.5	--	161	180	200	201	218	227
90	6.2	--	170	192	213	227	236	245
100	6.9	--	183	209	231	245	254	263
110	7.6	--	197	223	246	263	276	281
125	8.6	--	201	241	267	284	298	--

- Shaded areas indicate capacities with main valve wide-open.

1. Capacities based on 0 PSIG (0 BAR) outlet pressure. If outlet pressure is not 0 PSIG (0 BAR), shaded capacities may be recalculated using the wide-open C_g and the desired pressure drop.

P1808 Capacities Using Optional External Control Line and a Pilot with High-Gain Restriction

Set Pressure Range, PSIG (BAR)	Set Pressure[1]		Buildup Over Set Pressure to Begin Opening Main Valve[2]		Buildup Over Set Pressure to Fully Open Main Valve[3]		Pressure Drop Below Set Pressure to Reseat Pilot		Capacities of 0.6 Specific Gravity Natural Gas[4]	
	PSIG	BAR	PSIG	BAR	PSIG	BAR	PSIG	BAR	SCFH	Nm³/h
3 to 18 (0.21 to 1.2)	3	0.21	0.9	0.06	6.0	0.41	1.0	0.07	37,000	992
	5	0.35	0.7	0.05	4.0	0.28			37,000	992
	10	0.69	0.7	0.05	1.2	0.08			42,000	1126
	15	1.0	0.7	0.05	1.0	0.07			52,000	1394
15 to 40 (1.0 to 2.8)	15	1.0	0.8	0.05	1.1	0.07	1.0	0.07	53,000	1420
	20	1.4							63,000	1688
	30	2.1							82,000	2198
	40	2.8							101,000	2707
35 to 125 (2.4 to 8.6)	40	2.8	1.4	0.09	1.9	0.13	1.0	0.07	102,000	2734
	50	3.5							121,000	3243
	60	4.1							139,000	3725
	70	4.8							157,000	4208
	80	5.5	1.6	0.11	2.2	0.15	1.0	0.07	176,000	4717
	90	6.2							194,000	5199
	100	6.9							213,000	5708
	110	7.6							231,000	6191
	125	8.6							258,000	6914

1. Set pressure is defined as the pressure at which the pilot exhaust starts to bubble (discharge).
2. Crack pressure is the inlet pressure at which the main valve starts audible flow.
3. Inlet pressure buildup over the set pressure to achieve wide-open capacity.
4. Capacities with inlet piping equal to body size and without outlet piping.

P1808 Regulator Rebuild Kits

	Kit Includes	Part Number
P1808	Nitrile Diaphragm Assembly, Valve plug O-rings & backup O-rings, Casing/ body gasket	971-180-800

P1808 Dimensions

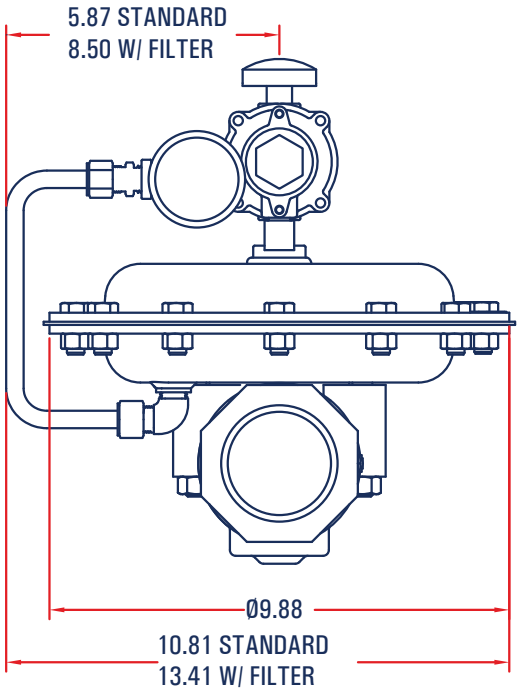

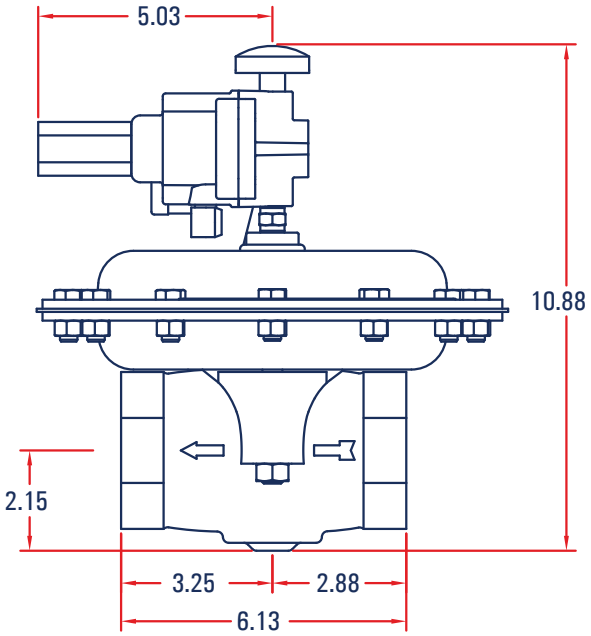

Angle Body

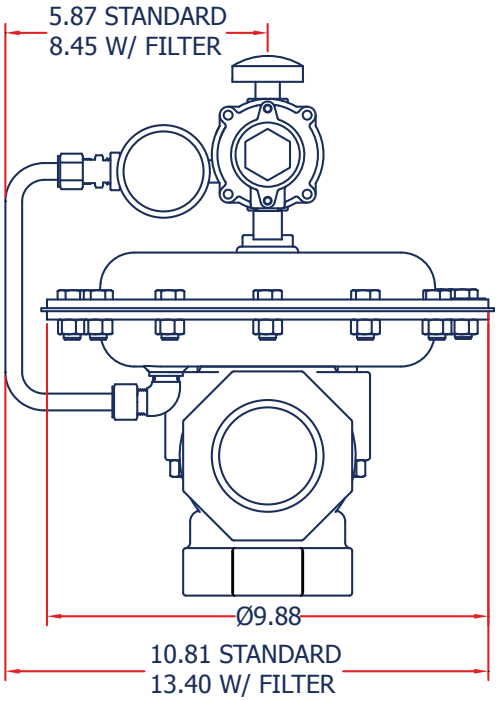

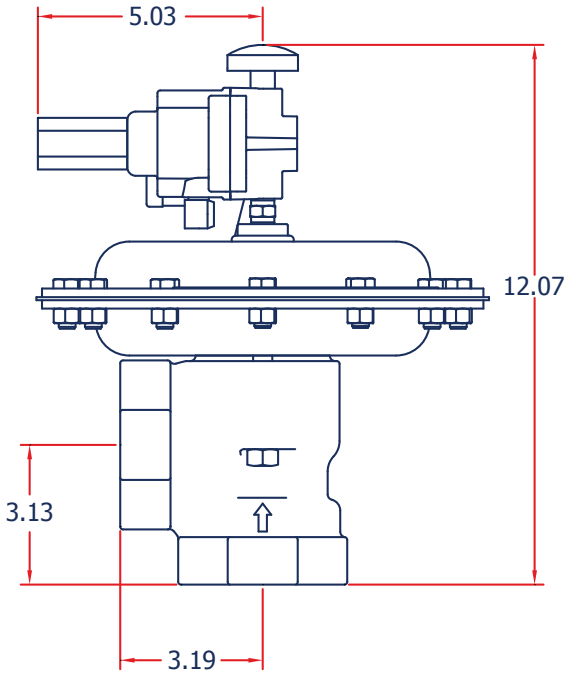

P1808 Parts

Item	Description		Qty.	Part Number
1	Upper Casing, Steel		1	802-121-000
2	Lower Casing, Steel		1	802-122-000
3	Diaphragm Assembly		1	804-278-000
4	Upper Diaphragm Plate		1	638-080-000
5	Lower Diaphragm Plate		1	638-081-000
6	Valve Plug, Stainless Steel		1	639-121-000
7	O-ring Retainer		1	643-207-000
8	Body	2" NPT - Iron, Straight	1	664-387-000
		2" NPT - Steel, Straight		664-387-001
		2" NPT - Iron, Angle		664-429-000
9	Valve Plug Base O-ring - Nitrile		1	649-309-005
10	Valve Plug O-ring - Nitrile		1	649-309-006
19	Valve Plug Backup Ring		1	649-320-000
11	Upper Valve Plug O-ring - Nitrile		1	649-309-007
12	Spring		1	655-747-000
13	Valve Plug Bolt		1	648-467-006
14	Valve Plug Bolt Nut		2	634-201-000
15	Casing Build Screws		12	648-467-007
16	Casing Build Screws Nuts		12	634-151-000
17	Casing/Body Build Screws		2	603-010-000

Item	Description	Qty.	Part Number
18	Casing/Body Build Screw Nuts	2	634-202-000
20	Valve Plug Guide	1	626-113-000
21	Casing/Body Gasket	2	624-085-000
22	Name Plate	1	632-553-000
24	P590 Filter Assembly - Brass	1	P594
	P590 Filter Assembly - Stainless		P595
25	Hex Nipple - 1/4	1	622-056-000
26	Street T - 1/4 FxFxM	1	622-064-000
27	Compression Fttg. - 3/8 x 1/4 NPT	1	622-065-000
28	Elbow Compression Fttg. - 3/8 x 1/4 NPT	1	622-066-000
29	Vent	1	836-009-000
30	Pilot Tubing - Standard	1	660-083-000
	Pilot Tubing - With P590 Filter		660-083-001
31	0-160 PSI Gauge	1	GG20160C4
32	Consult PL82 / PL83 Pilot Regulator information data sheet in the BelGAS Product Binder in Tab entitled "Pilot's and Small Regs"	1	

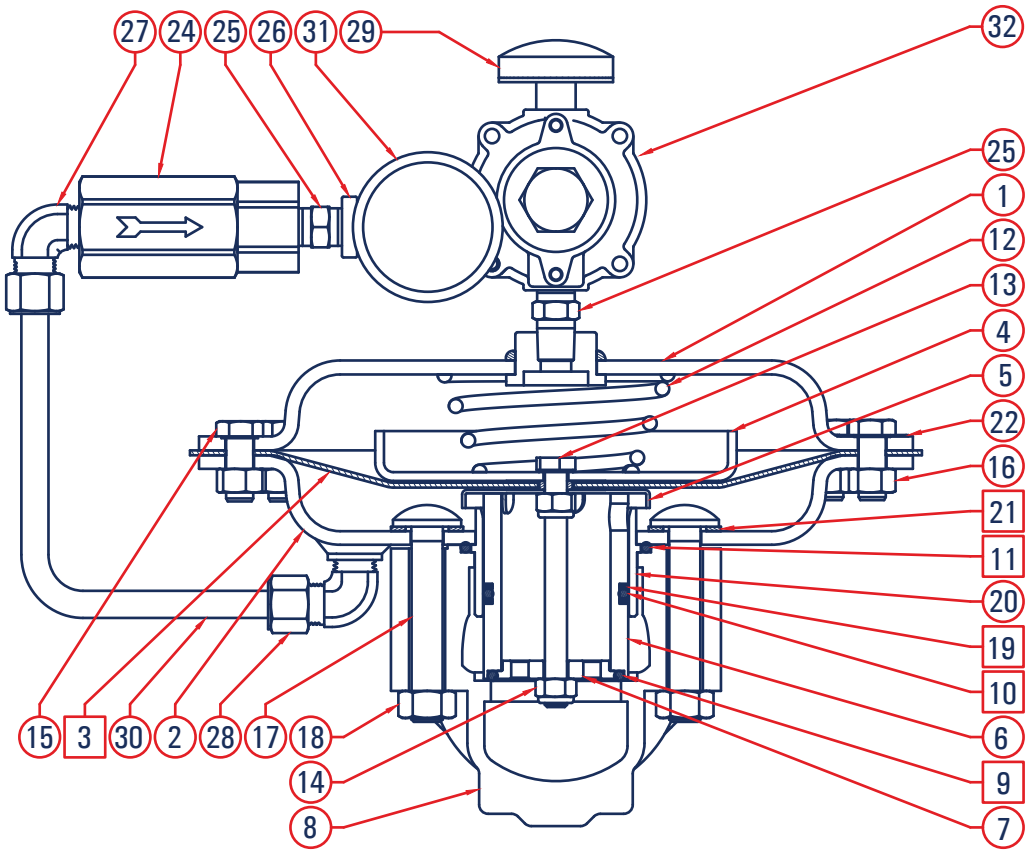

☐ - PARTS INCLUDED IN REPAIR KITS 971-180-8XX

P255 High Capacity Relief Valves

- Zero leakage to 98% of set pressure
- Set pressure tolerance ± 5% of preset
- Reseal at 92% of set pressure
- Line sizes of 3/4" and 1" NPT

Materials of Construction

Component	Material
Body	CDA360 Brass
Spring	302 Stainless Steel
Retainer	CDA360 Brass
Seal	Nitrile

P255 Dimensions

Pipe Size	A	Hex
3/4" NPT	3.39"	1-3/4"
1" NPT	3.79"	1-3/4"

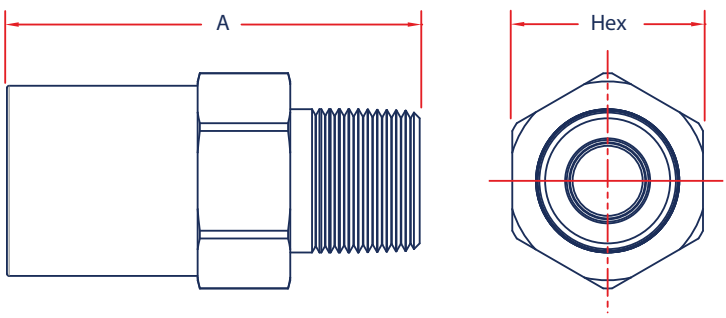

P255 Ordering Info

Part Number	NPT Size	Set Pressure
P25506BB1050	3/4 NPT	50 PSIG
P25508BB1050	1 NPT	
P25506BB1055	3/4 NPT	55 PSIG
P25508BB1055	1 NPT	
P25506BB1070	3/4 NPT	70 PSIG
P25508BB1070	1 NPT	
P25506BB1075	3/4 NPT	75 PSIG
P25508BB1075	1 NPT	
P25506BB1100	3/4 NPT	100 PSIG
P25508BB1100	1 NPT	
P25506BB1125	3/4 NPT	125 PSIG
P25508BB1125	1 NPT	
P25506BB1150	3/4 NPT	150 PSIG
P25508BB1150	1 NPT	

P255 Flow Data

Spring Range	45 - 90			100 - 150			100 - 150			100 - 150		
Vessel Pressure	65	75	85	65	75	85	65	75	85	65	75	85
Set Pressure	50			100			125			150		
	Flow in SCFH Natural Gas, Converted for Air Flow Rate											
	24,000	36,700	46,100	23,100	36,600	47,100	32,200	50,700	72,100	47,000	61,600	72,500

P200 Pressure Regulator

- Minimize Sudden Downstream Load Change
- Wide Pressure Ranges
- P202 has internal relief valve for overpressure protection

The P200 series pressure regulator is a manual, direct acting, self-operating, spring loaded, adjustable regulator. The P200 series is used in applications where pressure reduction is required. The regulator will reduce the risk of "shock" from abrupt changes of downstream conditions. This can help prevent safety equipment from shutting an operation down.

Applications

- Compressors
- Gas Engines
- Service Regulators

Materials of Construction

Adjusting Screw	Aluminum / Zinc Plated Steel
Body	Ductile Cast Iron or WCB Steel
Bonnet	Aluminum
Closing Cap	Aluminum / Brass
Diaphragm	Nitrile
Lower Casing	Aluminum
Molded Seat Assembly	Nitrile
Orifice	Aluminum
Upper/Lower Spring Seat	Aluminum / Brass
Flange	Ductile Iron / WCB Steel

Specifications

Maximum Inlet	See Table 1	
Maximum Emergency Outlet	15 PSIG	
Pressure Ranges	See Table 2	
Port Sizes	1.25 NPT	
	1.5 NPT	
	1.5 NPT x 2 NPT	
	2 NPT	
Orifice Sizes	1/4"	
	3/8"	
	1/2"	
	3/4"	
	1"	
	1-3/16"	
End Connections	NPT	
	150 RF Flange	Steel Units Only
	125 FF Flange	Iron Units Only
Temperature Range	-20˚F to 180˚F	
	-29˚C to 82˚C	
Approx. Weight	26 lbs. (11.8 kg)	

P200 Series Maximum Inlet Pres-

Table 1

Orifice Inches	Range	Maximum Inlet Pressure	
		PSIG	BAR
1/4"	Any	125	8.618
3/8"	Any	125	8.618
1/2"	Any	100	6.894
3/4"	Any	60	4.136
1"	2-4.5" thru 14-30" WC	25	1.723
	1-2 thru 4-10 PSIG	30	2.068
1-3/16"	2-4.5" thru 14-30" WC	13	0.896
	1-2 thru 1.5-3.25 PSIG	14	0.965
	2-5 thru 2-5.5 PSIG	20	1.378
	4-10 PSIG	25	1.723

P200 Series Range Springs

Table 2

Model	Spring Ranges		Spring Color	Part Number
	W.C. or PSI	Bar		
P201 P202 P201S P202S	2 - 4.5 WC	0.005 - 0.011	Brown	655-697-002
	3.5- 6.5 WC	0.009 -0.016	Red	655.697-003
	5 - 9 WC	0.012 - 0.022	Black	655-697-004
	6 - 14 WC	0.015 - 0.035	Purple	655-697-011
	8.5 - 18 WC	0.021 - 0.045	White	655-697-005
	14 - 30 WC	0.035 - 0.075	Dark Green	655-697-006
P201H P202H P201S P202S	1 - 2 PSIG	0.069 - 0.138	Dark Blue	655-697-007
	1.5 - 3.25 PSIG	0.103 - 0.224	Orange	655-697-008
	2 - 5 PSIG	0.138 - 0.345	Yellow	655-697-009
P201K P201S	2 - 5.5 PSIG	0.138 - 0.379	Green	655-659-003
	4 - 10 PSIG	0.276 - 0.689	Grey	655-697-010

P200 Regulator Rebuild Kits

	Kit Includes	Part Number
P200 O & H Ranges	Diaphragm, disk holder assembly, cap gasket and body/ lower casing o-ring	971-200-000
P200 K Ranges	Diaphragm, disk holder assembly, cap gasket and body/ lower casing o-ring	971-200-001
P200 All Units	Stabilizer Kit for Downstream Dampening	971-200-004

P200 Dimensions

Body Size	A			B	C	D		
Inches	NPT	125 FF Flange	150 RF Flange			NPT	125 FF Flange	150 RF Flange
1.25	6.13			11.03	18.09	1.85		
1.5	6.13		10	11.03	18.09	1.85		1.85
1.5 x 2	6.13			11.03	18.09	1.85		

P200 Standard

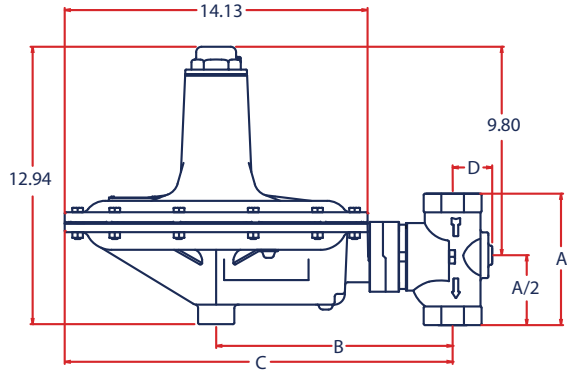

P200 Flanged

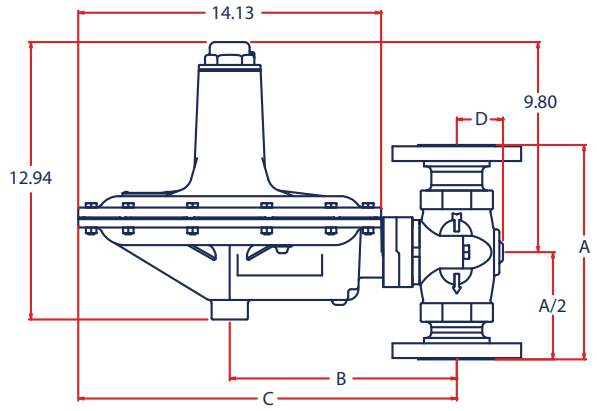

P200 Part Matrix

P20										
									Version	
	1								Non-Relieving	
	2								Relieving	
									Configuration	
		0							Normal	
		H							High	
		K							Heavy	
		S							Throat Stabilizer	
		P							Port Size	
			12						1.25 NPT	
			14						1.5 NPT	
			15						1.5 x 2 NPT	
			16						2 NPT	
									Spring Range - WC or PSI / mBAR	
				004					2 - 4.5" WC 4.98 - 11.20	O and S Version
				006					3.5 - 6.5" WC 8.71 - 16.19	
				009					5 - 9" WC 12.45 - 22.41	
				014					6 - 14" WC 14.94 - 34.87	
				018					8.5 - 18" WC 21.17 - 44.83	
				030					14 - 30" WC 34.87 - 74.72	
				002					1 - 2 PSIG 68.94 - 137.89	H or S Version Only
				003					1.5 - 3.25 PSIG 103.42 - 224.07	
				005					2 - 5 PSIG 137.89 - 344.73	
				K05					2 - 5.5 PSIG 137.89 - 379.21	K or S version Only
				010					4 - 10 PSIG 275.79 - 689.47	
									Special Construction	
					0				None	
					A				150 RF (1.5" & 2" Steel Only)	
					E				125 FF (2" Iron Only)	
									Orifice	
						4			1/4"	
						6			3/8"	
						8			1/2"	
						B			3/4"	
						D			1"	
						F			1-3/16"	
									Port Orientation	
							1		Up (Standard)	
							2		Down	
							3		Right	
							4		Left	
									Bonnet Orientation	
								C	12 O'Clock	
								D	3 O'Clock (Standard)	
								E	6 O'Clock	
								F	9 O'Clock	
									Body Material	
								0	Iron	
								2	Steel	

P200 Head Only

P20				0				
							Version	
	1						Non-Relieving	
	2						Relieving	
							Configuration	
		0					Normal	
		H					High	
		K					Heavy	
		S					Throat Stabilizer	
		P					Spring Range - WC or PSIG / mBAR	
			004				2 - 4.5" WC 4.98 - 11.20	
			006				3.5 - 6.5" WC 8.71 - 16.19	
			009				5 - 9" WC 12.45 - 22.41	
			014				6 - 14" WC 14.94 - 34.87	
			018				8.5 - 18" WC 21.17 - 44.83	
			030				14 - 30" WC 34.87 - 74.72	
			002				1 - 2 PSIG 68.94 - 137.89	H or S Version Only
			003				1.5 - 3.25 PSIG 103.42 - 224.07	
			005				2 - 5 PSIG 137.89 - 344.73	
			K05				2 - 5.5 PSIG 137.89 - 379.21	K or S version Only
			010				4 - 10 PSIG 275.79 - 689.47	
							Special Construction	
				0			None	
							Bonnet Orientation	
					C		12 O'Clock	
					D		3 O'Clock (Standard)	
					E		6 O'Clock	
					F		9 O'Clock	
							Trim Material	
						0	Nitrile	

P200 Body Orientation*

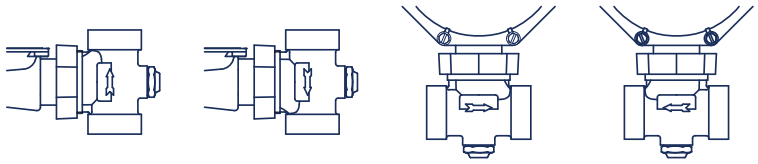

UP 1 | DOWN 2 | RIGHT 3 | LEFT 4

* Port orientation is based on the body's "Out" port location in relation to the top view of the regulator.

P200 Vent Positions

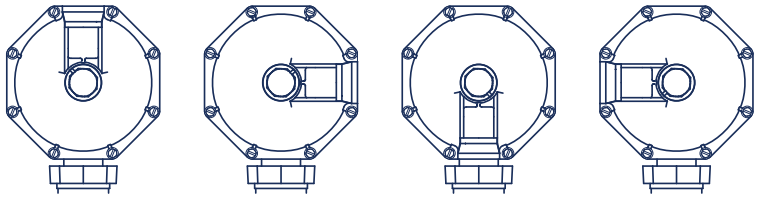

12 C | 3 D | 6 E | 9 F

P202 Normal (0) Relief Capacities

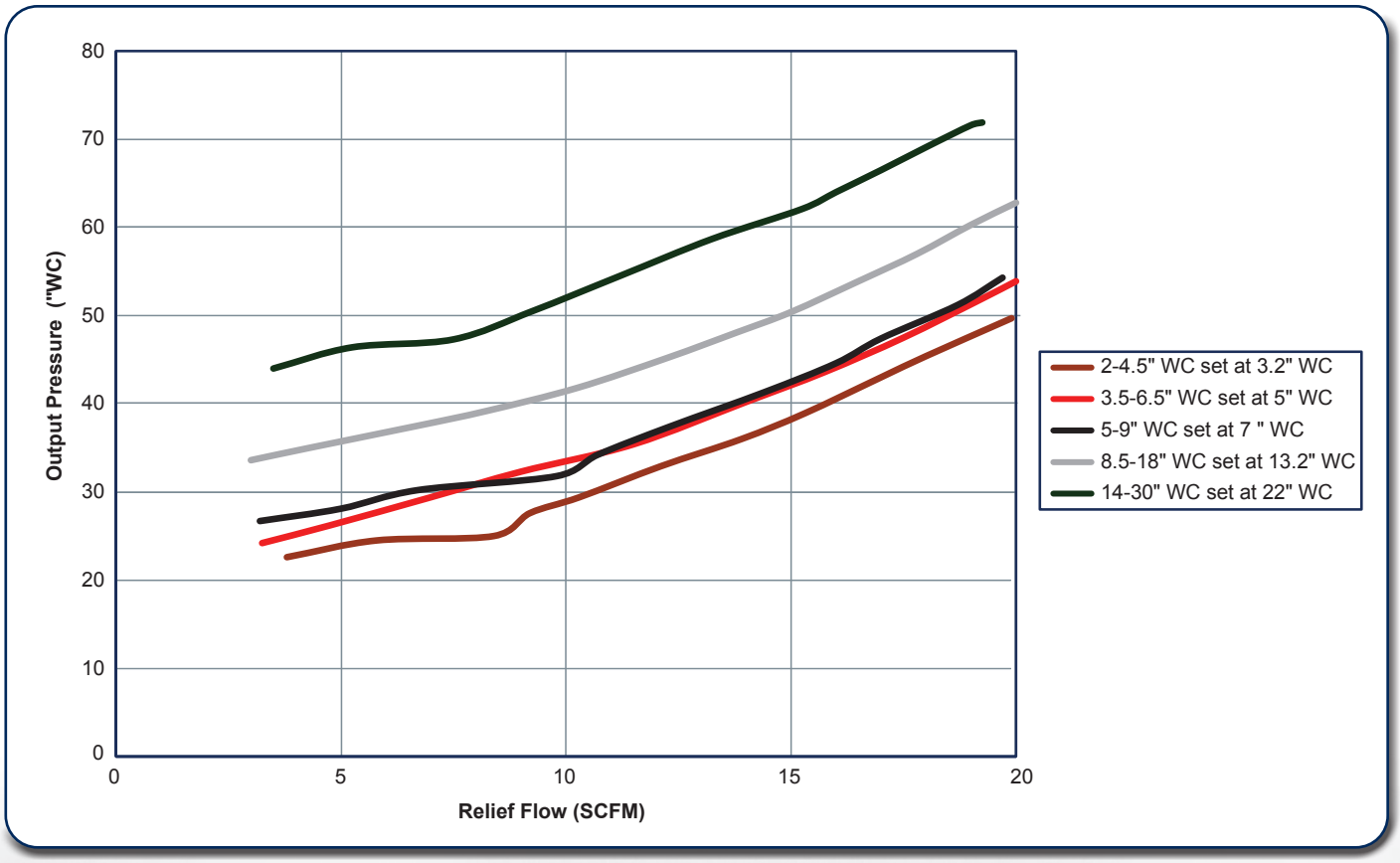

P202 High (H) Relief Capacities

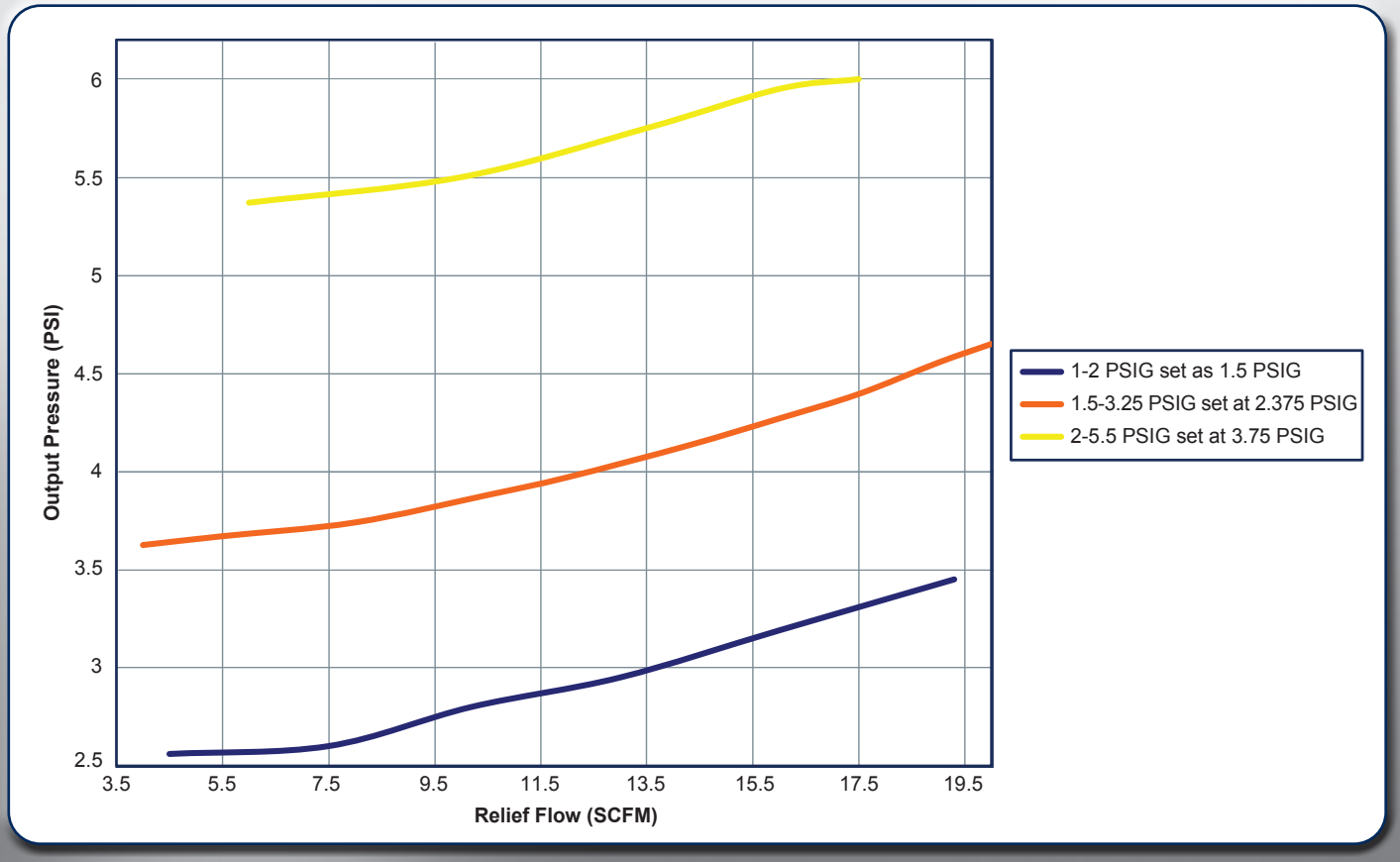

P200 Flow Capacities in SCFH (Nm³/h) of 0.6 Specific Gravity Natural Gas

BelGAS

Outlet Pressure, Spring Part Number, and Accuracy	Inlet Pressure		NPT 1-1/2 Body Size					
			Orifice Size, Inches (mm)					
	PSIG	BAR	1/4 (6.4)	3/8 (9.5)	1/2 (13)	3/4 (19)	1 (25)	1-3/16 (30)
4 inches w.c. (10 mbar) 655-697-002 or 655-697-003 1 inch w.c. (2 mbar) droop 2 inches w.c. (5 mbar) boost	0.4	0.028				1000 (26.8)	1400 (37.5)	1600 (42.8)
	0.5	0.034				1400 (37.5)	1600 (42.8)	1800 (48.2)
	1	0.07	400 (10.7)	800 (21.4)	1200 (32.2)	2100 (56.3)	2500 (67.0)	2700 (72.4)
	1.5	0.10	500 (13.4)	1050 (28.1)	1600 (42.9)	2500 (67.0)	3000 (80.4)	3200 (85.8)
	2	0.14	600 (16.1)	1300 (34.8)	2100 (56.3)	2800 (75.0)	3500 (93.8)	3800 (102)
	5	0.34	1150 (30.8)	2200 (58.9)	3300 (88.4)	4500 (121)	5300 (142)	6000 (161)
	13	0.90	1600 (42.8)	3600 (96.4)	6200 (166)	7000 (188)	6000 (161)	6850 (184)
	25	1.7	2550 (68.3)	5000 (134)	7350 (197)	8950 (240)	9000 (241)	
	60	4.1	4750 (127)	5100 (137)	7050 (189)	5600 (150)[1]		
	100	6.9	6650 (186)	7300 (196)	5200 (139)[1]			
	125	8.6	6950 ()	8300 (222)				
7 inches w.c. (17 mbar) 655-697-004 1 inch w.c. (2 mbar) droop 2 inches w.c. (5 mbar) boost	0.4	0.028				900 (24.1)	1300 (34.8)	1450 (38.9)
	0.5	0.034				1200 (32.2)	1550 (41.5)	1750 (46.9)
	1	0.07	400 (10.7)	800 (21.4)	1100 (29.5)	1900 (50.9)	2300 (61.6)	2500 (67.0)
	1.5	0.10	500 (13.4)	1050 (28.1)	1500 (40.2)	2300 (61.6)	2800 (75.0)	1800 (48.2)
	2	0.14	600 (16.1)	1300 (34.8)	1900 (50.9)	2100 (56.3)	3300 (88.4)	1800 (48.2)
	5	0.34	950 (25.5)	2100 (56.3)	3200 (85.8)	3350 (89.8)	5100 (137)	4500 (121)
	13	0.90	1600 (42.8)	2200 (58.9)	3300 (88.4)	5800 (155)	8000 (214)	8000 (214)
	25	1.7	2200 (58.9)	5200 (139)	6800 (182)	8400 (225)	8750 (235)	
	60	4.1	4300 (115)	9200 (247)	10100 (271)	9900 (265)		
	100	6.9	7500 (201)	10500 (281)	9200 (247)[1]			
	125	8.6	9050 (243)	9800 (263)[1]				
11 inches w.c. (27 mbar) 655-697-005 ± 2 inches w.c. (5 mbar)	0.5	0.03				800 (21.4)	1500 (40.2)	1700 (45.6)
	1	0.07	400 (10.7)	700 (18.7)	1100 (29.5)	1800 (48.2)	2200 (58.9)	2450 (65.7)
	1.5	0.10	500 (13.4)	950 (25.5)	1450 (38.9)	2300 (61.6)	2800 (75.0)	2600 (69.7)
	2	0.14	600 (16.1)	1200 (32.2)	1700 (45.6)	1950 (52.3)	3200 (85.8)	2750 (73.7)
	5	0.34	950 (25.5)	2000 (53.6)	2900 (77.7)	3800 (102)	5100 (137)	5150 (138)
	13	0.90	1600 (42.8)	3400 (91.1)	3700 (99.2)	6100 (163)	7250 (194)	7650 (205)
	25	1.7	2100 (56.3)	5150 (138)	7100 (190)	7950 (213)	9400 (252)	
	60	4.1	4400 (118)	9250 (248)	9400 (252)	10400 (279)		
	100	6.9	7300 (196)	10000 (268)	10100 (271)			
	125	8.6	9050 (243)	10800 (289)				
14 inches w.c. (35 mbar) 655-697-005 ± 2 inches w.c. (5 mbar)	1	0.07	450 (12.1)	800 (21.4)	1000 (26.8)	1250 (33.5)	1500 (40.2)	1950 (52.3)
	1.5	0.10	500 (13.4)	850 (22.8)	1050 (28.1)	1550 (41.5)	1650 (44.2)	2350 (62.9)
	2	0.14	550 (14.7)	1150 (30.8)	1400 (37.5)	1750 (46.9)	2300 (61.6)	2500 (67.0)
	5	0.34	1000 (26.8)	1200 (32.2)	2050 (54.9)	3000 (80.4)	4300 (115)	4750 (127)
	13	0.90	1750 (46.9)	3050 (81.7)	4250 (114)	6100 (163)	7300 (196)	7850 (210)
	25	1.7	2500 (67.0)	4750 (127)	5650 (151)	8700 (233)	8700 (233)	
	60	4.1	4750 (127)	9450 (253)	9950 (267)	10550 (283)		
	100	6.9	7450 (200)	10400 (279)	10600 (284)			
	125	8.6	9050 (243)	10450 (280)				
20 inches w.c. (50 mbar) 655-697-006 ± 3 inches w.c. (7 mbar)	1	0.07	300 (8.04)	500 (13.4)	750 (20.1)	1000 (26.8)	1300 (34.8)	1700 (45.6)
	2	0.14	500 (13.4)	950 (25.5)	1400 (37.5)	2000 (53.6)	2800 (75.0)	3100 (83.1)
	5	0.34	900 (24.1)	1700 (45.6)	2500 (67.0)	4200 (113)	5000 (134)	5500 (147)
	13	0.90	1500 (40.2)	3200 (85.8)	5400 (145)	6500 (174)	7000 (188)	7100 (190)
	25	1.7	2100 (56.3)	4700 (126)	7000 (188)	8250 (221)	9350 (251)	
	60	4.1	4750 (127)	8900 (239)	9950 (267)	10600 (284)		
	100	6.9	7400 (198)	10500 (281)	10800 (289)			
	125	8.6	9200 (247)	10950 (293)				

1. Limited due to boost

- Shaded areas show where indicated droop would be exceeded regardless of capacity.
- Shaded areas show where maximum operating inlet pressure for a given port diameter is exceeded.

P200 Flow Capacities in SCFH (Nm³/h) of 0.6 Specific Gravity Natural Gas

Outlet Pressure, Spring Part Number, and Accuracy	Inlet Pressure		NPT 2 (DN 50) Body Size					
			Orifice Size, Inches (mm)					
	PSIG	BAR	1/4 (6.4)	3/8 (9.5)	1/2 (13)	3/4 (19)	1 (25)	1-3/16 (30)
4 inches w.c. (10 mbar) 655-697-002 or 655-697-003 1 inch w.c. (2 mbar) droop 2 inches w.c. (5 mbar) boost	0.4	0.028				1200 (32.3)	1600 (42.8)	1800 (48.2)
	0.5	0.034				1700 (45.6)	2200 (58.9)	2400 (64.3)
	1	0.07	400 (10.7)	900 (24.1)	1300 (34.8)	2800 (75.0)	3200 (85.8)	3800 (102)
	1.5	0.10	500 (13.4)	1100 (29.5)	1700 (45.5)	3600 (96.5)	4300 (115)	5000 (134)
	2	0.14	600 (16.1)	1400 (37.5)	2200 (58.9)	4500 (121)	5500 (147)	6400 (172)
	5	0.34	1000 (26.8)	2300 (61.6)	3700 (99.2)	7800 (209)	9500 (255)	12700 (340)
	13	0.90	1650 (44.2)	3700 (99.2)	6500 (174)	13000 (348)	14000 (375)	14500 (389)
	25	1.7	2500 (64.3)	5200 (139)	9200 (247)	13000 (348)	18000 (482)	
	60	4.1	4450 (119)	9000 (241)	14550 (390)	15000 (402)		
	100	6.9	5500 (147)	9500 (255)	12900 (346)[1]			
	125	8.6	7250 (194)	3900 (105)[1]				
7 inches w.c. (17 mbar) 655-697-004 1 inch w.c. (2 mbar) droop 2 inches w.c. (5 mbar) boost	0.4	0.028				950 (25.5)	1400 ()37.5	1600 (42.8)
	0.5	0.034				1500 (40.2)	1800 (48.2)	2000 (53.6)
	1	0.07	400 (10.7)	800 (21.4)	1200 (32.2)	2300 (61.6)	2800 (75.0)	3300 (88.4)
	1.5	0.10	500 (13.4)	1050 (28.1)	1600 (42.8)	3100 (83.1)	3600 (96.5)	4500 (121)
	2	0.14	600 (16.1)	1300 (34.8)	2000 (53.6)	4000 (107)	4500 (121)	6000 (161)
	5	0.34	1000 (26.8)	2100 (56.3)	3500 (93.8)	7700 (206)	9400 (252)	9400 (252)
	13	0.90	1650 (44.2)	3500 (93.8)	6400 (172)	10000 (268)	20200 (541)	21200 (568)
	25	1.7	2400 (64.3)	5200 (139)	10300 (276)	20000 (536)	11800 (316)[1]	
	60	4.1	4450 (119)	9000 (241)	12000 (322)	20700 (555)		
	100	6.9	7500 (201)	10000 (268)	13100 (351)			
	125	8.6	9500 (255)	10300 (276)				
11 inches w.c. (17 mbar) 655-697-005 ± 2 inches w.c. (5 mbar)	0.5	0.03				800 (21.4)	1500 (40.2)	1600 (42.8)
	1	0.07	400 (10.7)	750 (20.1)	1100 (29.5)	1800 (48.2)	2500 (64.0)	2600 (69.7)
	1.5	0.10	500 (13.4)	1000 (26.8)	1450 (38.9)	2500 (67.0)	3400 (91.1)	3350 (89.8)
	2	0.14	600 (16.1)	1200 (32.2)	1700 (45.6)	3100 (83.1)	3600 (113)	3750 (101)
	5	0.34	1000 (26.8)	2000 (53.6)	3000 (80.4)	7300 (196)	7000 (188)	8500 (228)
	13	0.90	1600 (42.9)	3400 (91.1)	6200 (166)	10350 (277)	17650 (473)	18100 (485)
	25	1.7	2400 (64.3)	5650 (151)	10350 (277)	19300 (517)	23450 (628)	
	60	4.1	4450 (119)	11350 (304)	19300 (517)	20200 (541)		
	100	6.9	7450 (200)	16650 (446)	20200 (541)			
	125	8.6	9500 (255)	17500 (469)				
14 inches w.c. (35 mbar) 655-697-005 ± 2 inches w.c. (5 mbar)	1	0.07	450 (12.1)	700 (18.8)	1100 (29.5)	1500 (40.2)	1700 (45.6)	2700 (72.4)
	1.5	0.10	550 (14.7)	850 (22.8)	1200 (32.3)	1900 (50.9)	2700 (72.4)	3600 (96.5)
	2	0.14	600 (16.1)	1000 (26.8)	1900 (50.9)	2800 (75.0)	3800 (102)	3800 (102)
	5	0.34	1050 (28.1)	1750 (46.9)	2800 (75.0)	4000 (107)	5300 (142)	10600 (284)
	13	0.90	1750 (46.9)	3700 (99.2)	5700 (153)	14400 (386)	18000 (482)	18500 (496)
	25	1.7	2600 (69.7)	5700 (153)	10200 (273)	18000 (482)	25400 (681)	
	60	4.1	4800 (129)	10900 (292)	11000 (295)	19600 (525)		
	100	6.9	7400 (198)	16500 (442)	14100 (378)			
	125	8.6	9100 (244)	18000 (482)				
20 inches w.c. (50 mbar) 655-697-006 ± 3 inches w.c. (7 mbar)	1	0.07	300 (8.04)	750 (20.1)	550 (14.7)	1250 (33.5)	1700 (45.6)	1800 (48.2)
	2	0.14	500 (13.4)	1150 (30.8)	1700 (45.6)	1900 (50.9)	2350 (62.9)	3250 (87.1)
	5	0.34	900 (24.1)	1650 (44.2)	2150 (57.6)	3250 (87.1)	6400 (172)	6700 (180)
	13	0.90	1500 (40.2)	2550 (68.3)	4350 (117)	5950 (159)	10150 (272)	10500 (281)
	25	1.7	2450 (65.7)	4850 (130)	7200 (193)	18100 (485)	19200 (515)	
	60	4.1	4900 (131)	9400 (252)	19600 (525)	22700 (608)		
	100	6.9	7500 (201)	17400 (466)	13800 (370)			
	125	8.6	9150 (245)	5500 (147)[1]				

P200 Flow Capacities in SCFH (Nm³/h) of 0.6 Specific Gravity Natural Gas

Outlet Pressure, Spring Part Number, and Accuracy	Inlet Pressure		NPT 1-1/2 Body Size					
			Orifice Size, Inches (mm)					
	PSIG	BAR	1/4 (6.4)	3/8 (9.5)	1/2 (13)	3/4 (19)	1 (25)	1-3/16 (30)
1 PSIG (0.07 BAR) 655-697-006 ±0.2 PSIG (0.014 BAR)	2	0.14	700 (18.8)	1250 (33.5)	1550 (41.5)	2900 (77.7)	3050 (81.7)	3250 (87.1)
	5	0.34	1050 (28.1)	2150 (57.6)	2800 (75.0)	4800 (129)	5600 (150)	6300 (169)
	10	0.69	1650 (44.2)	3200 (85.8)	4400 (118)	6550 (176)	7800 (209)	8150 (218)
	15	1.0	2000 (53.6)	4100 (110)	5750 (154)	8000 (214)	9400 (252)	10250 (275)
	20	1.4	2300 (61.6)	4750 (127)	6100 (163)	8700 (233)	10950 (293)	
	25	1.7	2600 (69.7)	5500 (147)	8200 (220)	9950 (267)	11550 (310)	
	30	2.1	2900 (77.7)	6250 (168)	8350 (224)	10800 (289)	12250 (328)	
	40	2.8	3600 (96.5)	7500 (201)	9350 (251)	10850 (291)		
	45	3.1	3900 (105)	8400 (225)	10350 (277)	11000 (295)		
	50	3.5	4250 (114)	8900 (239)	10950 (293)	11050 (296)		
	60	4.1	4950 (133)	10000 (268)	11000 (295)	11400 (306)		
	80	5.5	6150 (165)	11150 (299)	11350 (304)			
	100	6.9	7500 (201)	12000 (322)	12000 (322)			
	125	8.6	9150 (245)	12000 (322)				
1 PSIG (0.07 BAR) 655-697-006 ± 1% ABS ±0.16 psia (0.011 BAR)	2	0.14	650 (17.4)	1050 (28.1)	1350 (36.2)	2450 (65.7)	2700 (72.4)	3000 (80.4)
	5	0.34	1050 (28.1)	2100 (56.3)	2700 (72.4)	3800 (102)	4700 (126)	5200 (139)
	10	0.69	1500 (40.2)	2800 (75.0)	3700 (99.2)	5600 (150)	7000 (188)	7300 (196)
	15	1.0	1950 (52.3)	3750 (101)	4900 (131)	6900 (185)	8500 (228)	8750 (235)
	20	1.4	2200 (58.9)	4600 (123)	5800 (155)	8150 (218)	10350 (277)	
	25	1.7	2500 (67.0)	5000 (134)	7250 (194)	9050 (243)	10850 (291)	
	30	2.1	2800 (75.0)	6000 (161)	8200 (220)	9400 (252)	11000 (295)	
	40	2.8	3550 (95.1)	7350 (197)	9100 (244)	9500 (255)		
	45	3.1	3900 (105)	8250 (221)	9650 (259)	10100 (271)		
	50	3.5	4050 (109)	8450 (226)	10300 (276)	10300 (276)		
	60	4.1	4800 (129)	9050 (243)	10450 (280)	10550 (283)		
	80	5.5	5900 (158)	11000 (295)	11100 (297)			
	10	6.9	7400 (198)	11150 (299)	11500 (299)			
	125	8.6	9000 (241)	11750 (315)				
1 PSIG (0.07 BAR) 655-697-006 ± 2% ABS ±0.31 psia (0.021 BAR)	2	0.14	750 (20.1)	1450 (38.9)	2100 (56.3)	3700 (99.2)	4650 (125)	5350 (143)
	5	0.34	1250 (33.5)	2500 (67.0)	3550 (95.1)	6050 (162)	7900 (212)	7900 (212)
	10	0.69	1750 (46.9)	3450 (92.5)	5100 (137)	8550 (229)	9550 (256)	10100 (271)
	15	1.0	2050 (54.9)	4350 (117)	6700 (180)	9400 (252)	11250 (302)	11400 (306)
	20	1.4	2500 (67.0)	5150 (138)	8100 (217)	10500 (281)	12200 (327)	
	25	1.7	2700 (72.4)	5800 (155)	10100 (271)	11550 (310)	12600 (338)	
	30	2.1	3050 (81.7)	6650 (178)	10550 (283)	12350 (331)	13100 (351)	
	40	2.8	3700 (99.2)	7950 (212)	10550 (283)	12350 (331)		
	45	3.1	4100 (110)	8800 (236)	11800 (316)	12700 (340)		
	50	3.5	4550 (122)	9250 (248)	12000 (322)	13000 (348)		
	60	4.1	5000 (134)	10900 (292)	12600 (338)	13000 (348)		
	80	5.5	6450 (173)	12550 (336)	13000 (348)			
	10	6.9	7950 (213)	12900 (346)	13450 (360)			
	125	8.6	9450 (253)	13450 (360)				
1 PSIG (0.07 BAR) 655-697-006 ±0.2 PSIG (0.014 BAR)	2	0.14	500 (13.4)	750 (20.1)	1750 (46.9)	2250 (60.3)	2400 (64.3)	2850 (76.4)
	5	0.34	1100 (29.5)	1800 (48.2)	2300 (61.6)	3400 (91.1)	4850 (130)	5350 (143)
	10	0.69	1600 (42.9)	3200 (85.8)	4600 (123)	7250 (194)	8800 (236)	8800 (236)
	30	2.1	2800 (75.0)	6300 (169)	7800 (209)	10400 (279)	11250 (302)	
	60	4.1	4900 (131)	9600 (257)	9650 (259)	11000 (295)		
	100	6.9	7300 (196)	11200 (300)	11950 (320)			
	125	8.6	9100 (244)	10550 (283)[1]				

1. Limited due to boost

- Shaded areas show where maximum operating inlet pressure for a given port diameter is exceeded.

P200 Flow Capacities in SCFH (Nm³/h) of 0.6 Specific Gravity Natural Gas

Outlet Pressure, Spring Part Number, and Accuracy	Inlet Pressure		NPT 2 (DN 50) Body Size					
			Orifice Size, Inches (mm)					
	PSIG	BAR	1/4 (6.4)	3/8 (9.5)	1/2 (13)	3/4 (19)	1 (25)	1-3/16 (30)
1 PSIG (0.07 BAR) 655-697-006 ±0.2 PSIG (0.014 BAR)	2	0.14	650 (17.4)	1200 (32.2)	2200 (58.9)	3200 (85.8)	3600 (96.5)	4500 (121)
	5	0.34	1100 (25.5)	2300 (61.6)	3200 (85.8)	4800 (129)	7700 (206)	10000 (268)
	10	0.69	1600 (42.9)	3000 (80.4)	4300 (115)	11400 (306)	15200 (407)	16300 (437)
	15	1.0	1900 (50.9)	4000 (107)	6900 (185)	15600 (418)	20800 (557)	22300 (598)
	20	1.4	2300 (61.6)	4900 (131)	9100 (244)	19000 (509)	24000 (643)	
	25	1.7	2600 (69.7)	5600 (150)	10500 (281)	21700 (582)	27400 (734)	
	30	2.1	2900 (77.7)	6500 (174)	11800 (316)	25300 (678)	32800 (879)	
	40	2.8	3700 (99.2)	8000 (214)	14500 (389)	27000 (724)		
	45	3.1	4000 (107)	8800 (236)	15800 (423)	27000 (724)		
	50	3.5	4300 (115)	9300 (249)	16600 (445)	28000 (750)		
	60	4.1	4900 (131)	11300 (303)	19500 (523)	31600 (847)		
	80	5.5	6300 (169)	14200 (381)	24000 (643)			
	100	6.9	7700 (206)	16700 (448)	29500 (791)			
	125	8.6	9600 (257)	20200 (541)				
1 PSIG (0.07 BAR) 655-697-006 ± 1% ABS ±0.16 psia (0.011 BAR)	2	0.14	570 (15.3)	1100 (29.5)	2000 (53.6)	2750 (73.7)	3100 (83.1)	4000 (107)
	5	0.34	1050 (28.1)	2200 (58.9)	2750 (73.7)	4100 (110)	6250 (168)	9000 (241)
	10	0.69	1500 (40.2)	2500 (67.0)	4050 (109)	8500 (228)	13250 (355)	13700 (367)
	15	1.0	1900 (50.9)	3450 (92.5)	5800 (155)	15500 (415)	16000 (429)	16300 (437)
	20	1.4	2300 (61.6)	4800 (129)	7700 (206)	18300 (490)	20850 (559)	
	25	1.7	2500 (67.0)	5600 (150)	10400 (279)	21500 (576)	22800 (611)	
	30	2.1	2900 (77.7)	6350 (170)	11950 (320)	23800 (638)	24300 (651)	
	40	2.8	3650 (97.8)	7850 (210)	14550 (390)	24300 (651)		
	45	3.1	3850 (103)	8400 (225)	15600 (418)	25400 (681)		
	50	3.5	4250 (114)	9350 (251)	16700 (448)	26000 ()697		
	60	4.1	4900 (131)	11200 (300)	19400 (520)	32000 (858)		
	80	5.5	6200 (166)	14250 (382)	24600 (659)			
	10	6.9	7400 (198)	16750 (449)	29000 (777)			
	125	8.6	9350 (251)	20200 (541)				
1 PSIG (0.07 BAR) 655-697-006 ± 2% ABS ±0.31 psia (0.021 BAR)	2	0.14	700 (18.8)	1450 (38.9)	2450 (65.7)	4100 (110)	5600 (150)	7900 (212)
	5	0.34	1150 (30.8)	2550 (68.3)	4000 (107)	8000 (214)	11700 (314)	14300 (383)
	10	0.69	1800 (48.2)	3550 (95.1)	6200 (166)	12300 (330)	18400 (493)	20000 (536)
	15	1.0	2050 (54.9)	4450 (119)	7850 (210)	15900 (426)	22000 (590)	24600 (659)
	20	1.4	2400 (64.3)	5250 (141)	9100 (244)	19200 (515)	25800 (691)	
	25	1.7	2750 (73.7)	5900 (158)	10300 (276)	21800 (584)	31200 (836)	
	30	2.1	3150 (84.4)	6550 (176)	11800 (316)	26200 (702)	35000 (938)	
	40	2.8	3750 (101)	8200 (220)	14300 (383)	30500 (817)		
	45	3.1	4050 (109)	8800 (236)	15600 (418)	28100 (753)		
	50	3.5	4400 (118)	9300 (249)	16700 (448)	33900 (909)		
	60	4.1	5050 (135)	10850 (291)	19500 (523)	34200 (917)		
	80	5.5	6350 (170)	13600 (364)	24600 (659)			
	10	6.9	7850 (210)	17000 (456)	30200 (809)			
	125	8.6	9400 (252)	20500 (549)				
1 PSIG (0.07 BAR) 655-697-006 ±0.2 PSIG (0.014 BAR)	2	0.14	500 (13.4)	1050 (28.1)	1400 (37.5)	2200 (58.9)	2900 (77.7)	3700 (99.2)
	5	0.34	1100 (29.5)	2000 (53.6)	2200 (58.9)	4500 (121)	6600 (177)	7000 (188)
	10	0.69	1600 (42.9)	3500 (93.8)	5700 (153)	9700 (260)	13000 (348)	13300 (356)
	30	2.1	2800 (75.0)	6200 (166)	11700 (314)	20000 (536)	23000 (616)	
	60	4.1	4900 (131)	10900 (292)	19300 (517)	20600 (552)		
	100	6.9	7500 (201)	17300 (464)	23900 (641)			
	125	8.6	9000 (241)	19900 (533)				

1. Limited due to boost

- Shaded areas show where maximum operating inlet pressure for a given port diameter is exceeded.

P200 H Flow Capacities in SCFH (Nm³/h) of 0.6 Specific Gravity Natural Gas

Outlet Pressure, Spring Part Number, and Accuracy	Inlet Pressure		NPT 1-1/2 Body Size					
			Orifice Size, Inches (mm)					
	PSIG	BAR	1/4 (6.4)	3/8 (9.5)	1/2 (13)	3/4 (19)	1 (25)	1-3/16 (30)
2 PSIG (0.14 BAR) 655-697-007 ±0.2 PSIG (0.014 BAR)	5	0.34	850 (22.8)	1600 (42.9)	1650 (44.2)	2400 (64.3)	2450 (65.7)	3900 (105)
	10	0.69	1450 (38.9)	2050 (54.9)	3250 (87.1)	5400 (145)	5750 (154)	6650 (178)
	15	1.0	1650 (44.2)	3000 (80.4)	4300 (115)	7000 (188)	8200 (220)	8200 (220)
	20	1.4	2050 (54.9)	3850 (103)	5650 (151)	7500 (201)	9050 (243)	
	25	1.7	2500 (67.0)	4600 (123)	6500 (174)	9600 (257)	9700 (260)	
	30	2.1	2750 (73.7)	5650 (151)	6500 (174)	9600 (257)	10850 (291)	
	40	2.8	3500 (93.8)	7000 (188)	8400 (225)	10150 (272)		
	45	3.1	3750 (101)	7800 (209)	9150 (245)	10500 (281)		
	50	3.5	4250 (114)	8500 (228)	9600 (257)	10500 (281)		
	60	4.1	4850 (130)	8800 (236)	9700 (260)	11400 (306)		
	80	5.5	6150 (165)	10000 (268)	11250 (302)			
	100	6.9	7600 (204)	10800 (289)	11250 (302)			
	125	8.6	9300 (249)	12200 (327)				
2 PSIG (0.14 BAR) 655-697-007 ± 1% ABS ±0.04 psia (0.028 BAR)	5	0.34	1100 (29.5)	2200 (58.9)	2800 (75.0)	4550 (122)	5600 (150)	6550 (176)
	10	0.69	1750 (46.9)	3150 (84.4)	4600 (123)	7550 (202)	9050 (243)	10150 (272)
	15	1.0	2000 (53.6)	4200 (113)	6400 (172)	10050 (269)	11000 (295)	11200 (300)
	20	1.4	2400 (64.3)	5000 (134)	7550 (202)	11700 (314)	12200 (327)	
	25	1.7	2700 (72.4)	5750 (154)	9600 (257)	11900 (319)	12950 (347)	
	30	2.1	3100 (83.1)	6700 (180)	9600 (257)	11900 (319)	13300 (356)	
	40	2.8	3750 (101)	7950 (213)	10750 (288)	13000 (348)		
	45	3.1	4100 (110)	8750 (235)	10750 (288)	13000 (348)		
	50	3.5	4550 (122)	9550 (256)	12700 (340)	13000 (348)		
	60	4.1	5150 (138)	11250 (302)	13300 (356)	14400 (386)		
	80	5.5	6450 (173)	12750 (342)	13300 (356)			
	100	6.9	7750 (208)	14450 (387)	13300 (356)			
	125	8.6	9400 (252)	14600 (391)				
2 PSIG (0.14 BAR) 655-697-007 ± 1% ABS ±0.17 psia (0.012 BAR)	5	0.34	850 (22.8)	1400 (37.5)	1450 (38.9)	2250 (60.3)	2450 (65.7)	3300 (88.4)
	10	0.69	1400 (37.5)	1650 (44.2)	2550 (68.3)	4350 (117)	5250 (141)	5600 (150)
	15	1.0	1500 (40.2)	2700 (72.4)	3800 (102)	6000 (161)	5400 (145)	8000 (214)
	20	1.4	2000 (53.6)	3600 (96.5)	5200 (139)	7200 (193)	8200 (220)	
	25	1.7	2400 (64.3)	4500 (121)	6400 (172)	9000 (241)	9550 (256)	
	30	2.1	2800 (75.0)	5600 (150)	7500 (201)	10000 (268)	10400 (279)	
	40	2.8	3600 (96.5)	7800 (209)	9200 (247)	10150 (272)		
	45	3.1	3900 (105)	8400 (225)	9800 (263)	10900 (292)		
	50	3.5	4300 (115)	9100 (244)	10300 (276)	10600 (284)		
	60	4.1	5000 (134)	10200 (273)	11400 (306)	11300 (303)		
	80	5.5	6400 (172)	12000 (322)	10300 (276)(1)			
	100	6.9	7900 (212)	13000 (348)	11150 (299)(1)			
	125	8.6	9600 (257)	11950 (320)(1)				
2 PSIG (0.14 BAR) 655-697-007 ± 2% ABS ±0.33 psia (0.023 BAR)	5	0.34	1050 (28.1)	2100 (56.3)	2500 (67.0)	4100 (110)	5200 (139)	6250 (168)
	10	0.69	1650 (44.2)	3050 (81.7)	4200 (113)	6400 (172)	8350 (224)	8850 (237)
	15	1.0	1900 (50.9)	4200 (113)	6200 (166)	8800 (236)	10500 (281)	10750 (288)
	20	1.4	2200 (58.9)	5100 (137)	7600 (204)	10300 (276)	12000 (322)	
	25	1.7	2500 (67.0)	5800 (155)	8700 (233)	11800 (316)	12050 (323)	
	30	2.1	3000 (80.4)	6500 (174)	9600 (257)	12600 (338)	12700 (340)	
	40	2.8	3600 (96.5)	8100 (217)	11500 (308)	12700 (340)		
	45	3.1	3900 (105)	8800 (236)	12000 (322)	12800 (343)		
	50	3.5	4300 (115)	9700 (260)	12600 (338)	12900 (346)		
	60	4.1	5000 (134)	11300 (303)	13600 (364)	13700 (367)		
	80	5.5	6400 (172)	14200 (381)	12650 (339)			
	100	6.9	7900 (212)	15500 (415)	12950 (347)			
	125	8.6	9600 (257)	14200 (381)(1)				

1. Limited due to boost

- Shaded areas show where maximum operating inlet pressure for a given port diameter is exceeded.

P200 H Flow Capacities in SCFH (Nm³/h) of 0.6 Specific Gravity Natural Gas

Outlet Pressure, Spring Part Number, and Accuracy	Inlet Pressure		NPT 2 (DN 50) Body Size					
			Orifice Size, Inches (mm)					
	PSIG	BAR	1/4 (6.4)	3/8 (9.5)	1/2 (13)	3/4 (19)	1 (25)	1-3/16 (30)
2 PSIG (0.14 BAR) 655-697-007 ±0.2 PSIG (0.014 BAR)	5	0.34	850 (22.8)	1800 (48.2)	1800 (48.2)	2950 (79.1)	4250 (114)	5200 (139)
	10	0.69	1350 (36.2)	1900 (50.9)	3000 (80.4)	5200 (139)	6600 (177)	7800 (209)
	15	1.0	1700 (45.6)	2800 (75.0)	3700 (99.2)	6900 (185)	7200 (193)	9500 (255)
	20	1.4	2000 (53.6)	3800 (102)	5300 (142)	9000 (241)	9800 (263)	
	25	1.7	2450 (65.7)	4500 (121)	6800 (182)	12500 (335)	14200 (381)	
	30	2.1	2650 (71.0)	5200 (139)	7500 (201)	16000 (429)	16100 (431)	
	40	2.8	3400 (91.1)	7400 (198)	13200 (354)	21600 (579)		
	45	3.1	3600 (96.1)	8000 (214)	15500 (415)	21600 (579)		
	50	3.5	4000 (107)	8500 (228)	16700 (448)	21900 (587)		
	60	4.1	4600 (123)	10700 (287)	19200 (515)	18800 (504)[1]		
	80	5.5	5800 (155)	13100 (351)	24800 (665)			
	100	6.9	7100 (190)	16200 (434)	25600 (686)			
	125	8.6	9000 (241)	19900 (533)				
2 PSIG (0.14 BAR) 655-697-007 ±0.4 PSIG (0.028 BAR)	5	0.34	1100 (29.5)	2250 (60.3)	3200 (85.8)	5500 (147)	7800 (209)	10100 (271)
	10	0.69	1600 (42.9)	3250 (87.1)	5400 (145)	10000 (268)	14100 (378)	15100 (405)
	15	1.0	2000 (53.6)	4150 (111)	7200 (193)	14400 (386)	18600 (498)	22100 (592)
	20	1.4	2300 (61.6)	4950 (133)	9000 (241)	17500 (469)	24000 (643)	
	25	1.7	2650 (71.0)	5800 (155)	10200 (273)	20700 (555)	28000 (750)	
	30	2.1	3100 (83.1)	6600 (177)	11800 (316)	24900 (667)	28500 (764)	
	40	2.8	3600 (96.5)	8100 (217)	14600 (391)	28000 (750)		
	45	3.1	4100 (110)	8850 (237)	15800 (423)	29000 (777)		
	50	3.5	4400 (118)	9850 (264)	17200 (461)	29200 (783)		
	60	4.1	4900 (131)	11300 (303)	19500 (523)	29300 (785)		
	80	5.5	6400 (172)	14300 (383)	24500 (657)			
	100	6.9	7600 (204)	17200 (461)	29700 (796)			
	125	8.6	9400 (252)	20500 (549)				
2 PSIG (0.14 BAR) 655-697-007 ± 1% ABS ±0.17 psia (0.012 BAR)	5	0.34	750 (20.1)	1600 (42.9)	1600 (42.9)	2400 (64.3)	3000 (80.4)	4100 (110)
	10	0.69	1250 (33.5)	1600 (42.9)	2550 (68.3)	4250 (114)	5000 (134)	6100 (163)
	15	1.0	1600 (42.9)	2700 (72.4)	3800 (102)	5200 (139)	6900 (185)	7600 (204)
	20	1.4	2000 (53.6)	3600 (96.5)	5200 (139)	6900 (185)	9400 (252)	
	25	1.7	2450 (65.7)	4400 (118)	7500 (201)	9600 (257)	10650 (285)	
	30	2.1	2800 (75.0)	5200 (139)	8600 (230)	11800 (316)	16100 (431)	
	40	2.8	3700 (99.2)	7500 (201)	12200 (327)	16200 (434)		
	45	3.1	4100 (110)	8400 (225)	15200 (407)	18350 (492)		
	50	3.5	4400 (118)	9000 (241)	16900 (453)	21000 (563)		
	60	4.1	5100 (137)	11000 (295)	20800 (557)	21000 (563)		
	80	5.5	6500 (174)	14600 (391)	24800 (665)			
	100	6.9	8000 (214)	18000 (482)	29300 (785)			
	125	8.6	9800 (263)	20500 (549)				
2 PSIG (0.14 BAR) 655-697-007 ± 2% ABS ±0.33 psia (0.023 BAR)	5	0.34	1000 (26.8)	2150 (57.6)	2750 (73.7)	5000 (134)	6200 (166)	7900 (212)
	10	0.69	1550 (41.5)	3050 (81.7)	5000 (134)	8600 (230)	12750 (342)	13800 (370)
	15	1.0	1900 (50.9)	4200 (113)	7200 (193)	11000 (295)	11750 (315)	21700 (582)
	20	1.4	2300 (61.6)	5100 (137)	9200 (247)	14200 (381)	16000 (429)	
	25	1.7	2600 (69.7)	5900 (158)	10700 (287)	16400 (440)	25400 (681)	
	30	2.1	3000 (80.4)	6600 (177)	12100 (324)	19700 (528)	27900 (748)	
	40	2.8	3700 (99.2)	8200 (220)	12200 (327)	27200 (729)		
	45	3.1	4100 (110)	9000 (241)	15200 (407)	27200 (729)		
	50	3.5	4400 (118)	9700 (260)	16900 (453)	27400 (734)		
	60	4.1	5100 (137)	11300 (303)	20800 (557)	27400 (734)		
	80	5.5	6500 (174)	14600 (391)	24500 (657)			
	100	6.9	8000 (214)	18000 (482)	29600 (793)			
	125	8.6	9800 (263)	20500 (549)				

1. Limited due to boost

- Shaded areas show where maximum operating inlet pressure for a given port diameter is exceeded.

P200H Flow Capacities in SCFH (Nm³/h) of 0.6 Specific Gravity Natural Gas

Outlet Pressure, Spring Part Number, and Accuracy	Inlet Pressure		NPT 1-1/2 Body Size					
			Orifice Size, Inches (mm)					
	PSIG	BAR	1/4 (6.4)	3/8 (9.5)	1/2 (13)	3/4 (19)	1 (25)	1-3/16 (30)
3 PSIG (0.21 BAR) 655-697-008 ±0.3 PSIG (0.021 BAR)	5	0.34	800 (21.4)	1350 (36.2)	1650 (44.2)	2500 (67.0)	2500 (67.0)	3850 (103)
	10	0.69	1200 (32.2)	1800 (48.2)	2650 (71.0)	4600 (123)	6050 (162)	6600 (177)
	15	1.0	1650 (44.2)	2300 (61.6)	3750 (101)	5600 (174)	9200 (247)	8200 (220)
	20	1.4	1950 (52.3)	3500 (93.8)	5000 (134)	8350 (224)	9200 (247)	
	25	1.7	2150 (57.6)	4400 (118)	6500 (174)	8150 (218)	10050 (269)	
	30	2.1	2700 (72.4)	5600 (150)	6700 (180)	10050 (269)	11250 (302)	
	40	2.8	3300 (88.4)	6900 (185)	7900 (212)	10300 (275)		
	45	3.1	3550 (95.1)	7000 (188)	8650 (232)	11000 (295)		
	50	3.5	4050 (109)	7800 (209)	9700 (260)	11000 (295)		
	60	4.1	4250 (114)	8200 (220)	9900 (265)	11450 (307)		
	80	5.5	5950 (159)	10000 (268)	11600 (311)			
	100	6.9	7450 (200)	11750 (315)	11900 (319)			
	125	8.6	8800 (236)	12200 (327)				
3 PSIG (0.21 BAR) 655-697-008 ±0.6 PSIG (0.041 BAR)	5	0.34	1100 (29.5)	1950 (52.3)	2800 (75.0)	4250 (114)	5400 (145)	7200 (193)
	10	0.69	1650 (44.2)	3100 (83.1)	4650 (125)	7750 (208)	8700 (233)	9100 (244)
	15	1.0	2050 (54.9)	4100 (110)	5950 (159)	9550 (256)	11150 (299)	11800 (316)
	20	1.4	2400 (64.3)	4900 (131)	7800 (209)	10650 (285)	12350 (331)	
	25	1.7	2600 (69.7)	5750 (154)	8700 (233)	11950 (320)	14050 (377)	
	30	2.1	3100 (83.1)	6550 (176)	10250 (275)	12050 (323)	14400 (386)	
	40	2.8	3150 (84.4)	7850 (210)	11300 (303)	13800 (370)		
	45	3.1	4150 (111)	8400 (225)	12450 (334)	14150 (379)		
	50	3.5	4400 (118)	9300 (249)	12450 (334)	14150 (379)		
	60	4.1	5000 (134)	10700 (287)	13000 (348)	15350 (411)		
	80	5.5	6400 (172)	13050 (350)	16000 (429)			
	100	6.9	7650 (205)	15400 (413)	16050 (430)			
	125	8.6	9200 (247)	16050 (430)				
3 PSIG (0.21 BAR) 655-697-008 ± 1% ABS ±0.18 psia (0.012 BAR)	5	0.34	500 (13.4)	1150 (30.8)	1200 (32.2)	1450 (38.9)	1550 (41.5)	2100 (56.3)
	10	0.69	900 (24.1)	1350 (36.2)	1500 (40.2)	2750 (73.7)	3200 (85.8)	3400 (91.1)
	15	1.0	1200 (32.2)	1700 (45.6)	2200 (58.9)	3900 (105)	4900 (131)	4950 (133)
	20	1.4	1500 (40.2)	2100 (56.3)	2900 (77.7)	5300 (142)	8000 (214)	
	25	1.7	1900 (50.9)	2600 (69.7)	4300 (115)	7400 (198)	9350 (251)	
	30	2.1	2200 (58.9)	3100 (83.1)	5100 (137)	8400 (225)	8650 (232)[1]	
	40	2.8	2900 (77.7)	4800 (129)	8000 (214)	8750 (235)		
	45	3.1	3300 (88.4)	5800 (155)	9300 (249)	9900 (265)		
	50	3.5	3700 (99.2)	6800 (182)	10200 (273)	10600 (284)		
	60	4.1	4400 (118)	8400 (225)	11600 (311)	10700 (287)		
	80	5.5	6300 (169)	10800 (289)	9400 (252)[1]			
	100	6.9	8100 (217)	12100 (324)	11750 (315)			
	125	8.6	10000 (268)	10750 (288)[1]				
3 PSIG (0.21 BAR) 655-697-008 ± 2% ABS ±0.35 psia (0.024 BAR)	5	0.34	900 (24.1)	1450 (38.9)	1800 (48.2)	3000 (80.4)	3000 (80.4)	4650 (125)
	10	0.69	1250 (33.5)	2050 (54.9)	3150 (84.4)	5150 (138)	6450 (173)	6650 (178)
	15	1.0	1800 (48.2)	3100 (83.1)	4400 (118)	7200 (193)	8700 (233)	8700 (233)
	20	1.4	2200 (58.9)	3800 (102)	6100 (163)	8600 (230)	11000 (295)	
	25	1.7	2600 (69.7)	5000 (134)	7600 (204)	9700 (260)	11050 (296)	
	30	2.1	2900 (77.7)	5800 (155)	8700 (233)	11200 (300)	11450 (3070)	
	40	2.8	3600 (96.5)	7800 (209)	10800 (289)	11600 (311)		
	45	3.1	4000 (107)	8400 (225)	11600 (311)	11600 (311)		
	50	3.5	4600 (123)	9400 (252)	12400 (332)	11750 (315)		
	60	4.1	5100 (137)	10600 (284)	13800 (370)	13250 (355)		
	80	5.5	6500 (174)	12700 (340)	12600 (338)[1]			
	100	6.9	8100 (217)	14400 (386)	12550 (336)[1]			
	125	8.6	10000 (268)	12500 (335)[1]				

1. Limited due to boost

- Shaded areas show where maximum operating inlet pressure for a given port diameter is exceeded.

P200H Flow Capacities in SCFH (Nm³/h) of 0.6 Specific Gravity Natural Gas

Outlet Pressure, Spring Part Number, and Accuracy	Inlet Pressure		NPT 2 (DN 50) Body Size					
			Orifice Size, Inches (mm)					
	PSIG	BAR	1/4 (6.4)	3/8 (9.5)	1/2 (13)	3/4 (19)	1 (25)	1-3/16 (30)
3 PSIG (0.21 BAR) 655-697-008 ±0.3 PSIG (0.021 BAR)	5	0.34	750 (20.1)	1400 (37.5)	1600 (42.9)	2400 (64.3)	2900 (77.7)	3500 (93.8)
	10	0.69	1200 (32.2)	1900 (50.9)	2750 (73.7)	5000 (134)	6400 (171)	6900 (185)
	15	1.0	1400 (37.5)	2000 (53.6)	3100 (83.1)	5900 (158)	7700 (206)	9800 (263)
	20	1.4	1850 (49.6)	3000 (80.4)	4150 (111)	7700 (206)	7900 (212)	
	25	1.7	2050 (54.9)	3900 (105)	5000 (134)	9100 (244)	9750 (261)	
	30	2.1	2550 (68.3)	4800 (129)	6700 (180)	10100 (271)	17200 (461)	
	40	2.8	3150 (84.4)	6250 (168)	8700 (233)	11600 (311)		
	45	3.1	3400 (91.1)	6750 (181)	9900 (265)	14500 (389)		
	50	3.5	3900 (105)	6750 (181)	12300 (330)	13900 (373)		
	60	4.1	4350 (117)	9400 (252)	12700 (340)	18300 (490)		
	80	5.5	5600 (150)	12700 (340)	18800 (504)			
	100	6.9	7000 (188)	14800 (397)	18800 (504)			
	125	8.6	8650 (232)	18800 (504)				
3 PSIG (0.21 BAR) 655-697-008 ±0.6 PSIG (0.041 BAR)	5	0.34	1100 (29.5)	1950 (52.3)	2550 (68.3)	4700 (126)	6000 (161)	7450 (200)
	10	0.69	1550 (41.5)	3000 (80.4)	4750 (127)	8600 (230)	12200 (327)	15400 (413)
	15	1.0	2050 (54.9)	3850 (103)	5950 (159)	12500 (338)	16200 (434)	20300 (544)
	20	1.4	2400 (64.3)	4850 (130)	8200 (220)	17000 (456)	21800 (584)	
	25	1.7	2800 (75.0)	5750 (154)	9800 (263)	19700 (528)	23000 (616)	
	30	2.1	3150 (84.4)	6450 (173)	11600 (311)	22500 (603)	26500 (710)	
	40	2.8	3650 (97.8)	7850 (210)	14300 (383)	26400 (708)		
	45	3.1	4100 (110)	8900 (239)	15500 (415)	28500 (764)		
	50	3.5	4350 (117)	9450 (253)	17000 (456)	29600 (793)		
	60	4.1	5100 (137)	11100 (297)	19850 (532)	29900 (801)		
	80	5.5	6350 (170)	14350 (385)	25200 (675)			
	100	6.9	7250 (194)	17250 (462)	29400 (788)			
	125	8.6	9400 (252)	21000 (563)				
3 PSIG (0.21 BAR) 655-697-008 ± 1% ABS ±0.18 psia (0.012 BAR)	5	0.34	650 (17.4)	1100 (29.3)	790 (21.2)	1500 (40.2)	1700 (45.6)	1750 (46.9)
	10	0.69	1000 (26.8)	1250 (33.5)	1500 (40.2)	2500 (67.0)	3700 (99.2)	4300 (115)
	15	1.0	1250 (33.5)	1750 (46.9)	2000 (53.6)	2900 (77.7)	3750 (101)	6000 (161)
	20	1.4	1450 (38.9)	2400 (64.3)	2200 (58.9)	4100 (110)	5750 (154)	
	25	1.7	1600 (42.8)	2900 (77.7)	4000 (107)	6900 (185)	6400 (172)	
	30	2.1	1950 (52.3)	3550 (95.1)	4400 (118)	8700 (233)	6700 (180)	
	40	2.8	2700 (72.4)	3850 (103)	5500 (147)	6450 (173)		
	45	3.1	2900 (77.7)	5400 (145)	9000 (241)	8000 (214)		
	50	3.5	3300 (88.4)	5700 (153)	9100 (244)	7900 (212)		
	60	4.1	3900 (105)	7200 (193)	11500 (308)	10300 (276)		
	80	5.5	5250 (141)	9200 (247)	9800 (263)[1]			
	100	6.9	6250 (168)	11300 (303)	10900 (292)[1]			
	125	8.6	7750 (208)	12650 (339)				
3 PSIG (0.21 BAR) 655-697-008 ± 2% ABS ±0.35 psia (0.024 BAR)	5	0.34	800 (21.4)	1450 (38.9)	1700 (45.6)	3150 (84.4)	3250 (87.1)	4000 (107)
	10	0.69	1300 (34.8)	2150 (57.6)	3200 (85.8)	5550 (149)	7200 (193)	9000 (241)
	15	1.0	1550 (41.5)	2850 (76.4)	4050 (109)	6800 (182)	8250 (221)	10800 (289)
	20	1.4	1850 (49.6)	3300 (88.4)	5400 (145)	9300 (249)	10900 (292)	
	25	1.7	2350 (62.9)	4650 (125)	6700 (180)	11250 (302)	15600 (418)	
	30	2.1	2450 (65.7)	5100 (137)	8600 (230)	12250 (328)	17350 (465)	
	40	2.8	3150 (84.4)	6950 (186)	11400 (306)	15150 (406)		
	45	3.1	3400 (91.1)	7650 (205)	11900 (319)	18150 (486)		
	50	3.5	3800 (102)	8500 (228)	14000 (375)	20200 (541)		
	60	4.1	4300 (115)	9850 (264)	19000 (509)	21150 (567)		
	80	5.5	5500 (147)	12600 (338)	23100 (619)			
	100	6.9	6500 (174)	15500 (415)	23650 (634)			
	125	8.6	8100 (217)	20650 (553)				

1. Limited due to boost

- Shaded areas show where maximum operating inlet pressure for a given port diameter is exceeded.

P200H Flow Capacities in SCFH (Nm³/h) of 0.6 Specific Gravity Natural Gas

Outlet Pressure, Spring Part Number, and Accuracy	Inlet Pressure		NPT 1-1/2 Body Size					
			Orifice Size, Inches (mm)					
	PSIG	BAR	1/4 (6.4)	3/8 (9.5)	1/2 (13)	3/4 (19)	1 (25)	1-3/16 (30)
5 PSIG (0.34 BAR) 655-697-009 ±0.5 PSIG (0.034 BAR)	10	0.69	1200 (32.2)	1850 (49.6)	2300 (61.6)	3350 (89.8)	4750 (127)	5500 (147)
	15	1.0	1350 (36.2)	2450 (65.7)	3200 (85.8)	5350 (141)	6650 (178)	7550 (202)
	20	1.4	1850 (49.6)	3200 (85.8)	3900 (105)	6700 (180)	8600 (230)	
	25	1.7	2200 (58.9)	3600 (96.5)	4900 (131)	8250 (221)	10000 (268)	
	30	2.1	2500 (67.0)	5100 (137)	6500 (174)	8800 (236)	11450 (307)	
	40	2.8	3250 (87.1)	6100 (163)	7650 (205)	10650 (285)		
	45	3.1	3650 (97.8)	6950 (186)	8500 (228)	11200 (300)		
	50	3.5	3850 (103)	7550 (202)	9250 (248)	12250 (328)		
	60	4.1	4600 (123)	8550 (229)	10300 (276)	12950 (347)		
	80	5.5	5900 (158)	10550 (283)	12500 (335)			
	100	6.9	7250 (194)	12000 (322)	12550 (336)			
	125	8.6	9000 (241)	13300 (356)				
5 PSIG (0.34 BAR) 655-697-009 ±1 PSIG (0.69 BAR)	10	0.69	1550 (41.5)	2850 (76.4)	4050 (109)	6450 (173)	8450 (226)	9800 (263)
	15	1.0	2000 (53.6)	3850 (103)	5800 (155)	9250 (248)	11150 (299)	12400 (332)
	20	1.4	2450 (65.7)	4750 (127)	7150 (192)	11400 (306)	13250 (355)	
	25	1.7	2800 (75.0)	5700 (153)	8600 (230)	12800 (343)	15250 (409)	
	30	2.1	3100 (83.1)	6400 (172)	10050 (269)	13550 (363)	16800 (450)	
	40	2.8	3700 (99.2)	7850 (210)	12350 (331)	15650 (419)		
	45	3.1	4050 (109)	8600 (230)	13000 (348)	15950 (427)		
	50	3.5	4450 (119)	9400 (252)	13650 (366)	16300 (437)		
	60	4.1	5050 (135)	10700 (287)	15100 (405)	18200 (488)		
	80	5.5	6300 (169)	13400 (359)	17650 (473)			
	100	6.9	7600 (204)	15950 (427)	17650 (473)			
	125	8.6	9200 (247)	17800 (477)				
5 PSIG (0.34 BAR) 655-697-009 ± 1% ABS ±0.20 psia (0.014 BAR)	10	0.69	650 (17.4)	900 (24.1)	1050 (28.1)	1200 (32.2)	1950 (52.3)	2200 (58.9)
	15	1.0	800 (21.4)	1100 (29.5)	1500 (40.2)	2000 (53.6)	2600 (69.7)	3400 (91.1)
	20	1.4	1050 (28.1)	1400 (37.5)	2050 (54.9)	2800 (75.0)	3800 (102)	
	25	1.7	1200 (32.2)	1800 (48.2)	2350 (62.9)	3800 (102)	4400 (118)	
	30	2.1	1450 (38.9)	2200 (58.9)	3000 (80.4)	4900 (131)	5250 (141)	
	40	2.8	1950 (52.3)	2950 (79.1)	4400 (118)	5750 (154)		
	45	3.1	2200 (58.9)	3300 (88.4)	5000 (134)	6550 (176)		
	50	3.5	2400 (64.3)	3850 (103)	6200 (166)	8200 (220)		
	60	4.1	2950 (79.1)	4800 (129)	8400 (225)	9250 (248)		
	80	5.5	4000 (107)	7400 (198)	7800 (209)			
	100	6.9	5300 (142)	10700 (287)	9200 (247)			
	125	8.6	7200 (193)	6150 (165)[1]				
5 PSIG (0.34 BAR) 655-697-009 ± 2% ABS ±0.39 psia (0.028 BAR)	10	0.69	1050 (28.1)	1650 (44.2)	1950 (52.3)	2600 (69.7)	3700 (99.2)	4900 (131)
	15	1.0	1350 (36.2)	2050 (54.9)	2900 (77.7)	4300 (115)	5600 (150)	6350 (170)
	20	1.4	1750 (46.9)	2700 (72.4)	3900 (105)	5800 (155)	7400 (198)	
	25	1.7	2100 (56.3)	3350 (89.8)	4850 (130)	7300 (196)	8750 (235)	
	30	2.1	2400 (64.3)	4050 (109)	5750 (154)	8700 (233)	10150 (272)	
	40	2.8	3200 (85.8)	5300 (142)	8000 (214)	9800 (263)		
	45	3.1	3500 (93.8)	6050 (162)	8950 (240)	10750 (288)		
	50	3.5	3900 (105)	6800 (182)	9800 (263)	11000 (295)		
	60	4.1	4700 (126)	8400 (225)	11500 (308)	12100 (324)		
	80	5.5	6150 (165)	11100 (297)	10300 (276)[1]			
	100	6.9	7900 (212)	13100 (351)	11200 (300)[1]			
	125	8.6	9700 (260)	11950 (320)[1]				

1. Limited due to boost

- Shaded areas show where maximum operating inlet pressure for a given port diameter is exceeded.

P200H Flow Capacities in SCFH (Nm³/h) of 0.6 Specific Gravity Natural Gas

Outlet Pressure, Spring Part Number, and Accuracy	Inlet Pressure		NPT 2 (DN 50) Body Size					
			Orifice Size, Inches (mm)					
	PSIG	BAR	1/4 (6.4)	3/8 (9.5)	1/2 (13)	3/4 (19)	1 (25)	1-3/16 (30)
5 PSIG (0.34 BAR) 655-697-009 ±0.5 PSIG (0.034 BAR)	10	0.69	1200 (32.2)	1700 (45.6)	2200 (58.9)	3750 (101)	5300 (142)	5800 (155)
	15	1.0	1400 (37.5)	2100 (56.3)	2850 (76.4)	5500 (147)	6850 (184)	8150 (218)
	20	1.4	1800 (48.2)	2850 (76.4)	3750 (101)	7000 (188)	7700 (206)	
	25	1.7	2050 (54.9)	3750 (101)	4550 (122)	7900 (212)	9750 (261)	
	30	2.1	2500 (67.0)	4550 (122)	5800 (155)	8500 (228)	10750 (288)	
	40	2.8	3150 (84.4)	5800 (155)	6200 (166)	12000 (322)		
	45	3.1	3500 (93.8)	6200 (166)	7000 (188)	12850 (344)		
	50	3.5	3900 (105)	7000 (188)	7700 (206)	14200 (381)		
	60	4.1	4350 (117)	7700 (206)	10950 (293)	16650 (446)		
	80	5.5	5850 (157)	10950 (293)	13500 (362)			
	100	6.9	7150 (192)	13500 (362)	16400 (440)			
	125	8.6	8900 (239)	16400 (440)				
5 PSIG (0.34 BAR) 655-697-009 ±1 PSIG (0.69 BAR)	10	0.69	1500 (40.2)	2800 (75.0)	4050 (109)	7350 (197)	9400 (252)	12400 (332)
	15	1.0	2050 (54.9)	3950 (106)	5700 (153)	10750 (288)	12950 (347)	17100 (458)
	20	1.4	2400 (64.3)	4750 (127)	7300 (196)	13550 (363)	18450 (494)	
	25	1.7	2750 (73.7)	5450 (146)	9100 (244)	16200 (434)	20400 (547)	
	30	2.1	3100 (83.1)	6500 (174)	10500 (281)	19200 (515)	24700 (662)	
	40	2.8	3750 (101)	7850 (210)	13700 (367)	25250 (677)		
	45	3.1	4050 (109)	8550 (229)	15150 (406)	25700 (689)		
	50	3.5	4400 (118)	9600 (257)	16650 (446)	27950 (749)		
	60	4.1	4950 (133)	10850 (291)	19150 (513)	30550 (819)		
	80	5.5	6450 (173)	14000 (375)	24150 (647)			
	100	6.9	7700 (206)	17000 (456)	29400 (788)			
	125	8.6	9250 (248)	20700 (555)				
5 PSIG (0.34 BAR) 655-697-009 ± 1% ABS ±0.20 psia (0.014 BAR)	10	0.69	500 (13.4)	850 (22.8)	1000 (26.8)	1500 (40.2)	2000 (53.6)	2200 (58.9)
	15	1.0	750 (20.1)	1200 (32.2)	1400 (37.5)	1900 (50.9)	2300 (61.6)	2900 (77.7)
	20	1.4	1000 (26.8)	1550 (41.5)	1900 (50.9)	2700 (72.4)	3000 (80.4)	
	25	1.7	1250 (33.5)	1950 (52.3)	2300 (61.6)	3400 (91.1)	3700 (99.2)	
	30	2.1	1450 (38.9)	2200 (58.9)	2800 (75.0)	4100 (110)	4000 (107)	
	40	2.8	1900 (50.9)	3100 (83.1)	4000 (107)	3300 (88.4)		
	45	3.1	2100 (56.3)	3400 (91.1)	4400 (118)	4600 (123)		
	50	3.5	2400 (64.3)	3800 (102)	5000 (134)	5300 (142)		
	60	4.1	2800 (75.0)	4700 (126)	6600 (177)	7250 (194)		
	80	5.5	3900 (105)	7300 (196)	5050 (135)[1]			
	100	6.9	5000 (134)	9300 (249)	6400 (172)[1]			
	125	8.6	7000 (188)	6000 (161)[1]				
5 PSIG (0.34 BAR) 655-697-009 ± 2% ABS ±0.39 psia (0.028 BAR)	10	0.69	1000 (26.8)	1400 (37.5)	1650 (44.2)	2900 (77.7)	3500 (93.8)	4500 (121)
	15	1.0	1300 (34.8)	2100 (56.3)	2800 (75.0)	3900 (105)	5500 (147)	5850 (157)
	20	1.4	1650 (44.2)	2750 (73.7)	3600 (96.5)	5300 (142)	7400 (198)	
	25	1.7	2050 (54.9)	3400 (91.1)	4400 (118)	6800 (182)	7400 (196)	
	30	2.1	2400 (64.3)	4000 (107)	5500 (147)	7900 (212)	8350 (224)	
	40	2.8	3100 (83.1)	5400 (145)	7200 (193)	9300 (249)		
	45	3.1	3250 (87.1)	6100 (163)	8300 (222)	9850 (264)		
	50	3.5	3850 (103)	6700 (180)	9400 (252)	10650 (285)		
	60	4.1	4450 (119)	8200 (220)	11500 (308)	14550 (390)		
	80	5.5	6100 (163)	11000 (295)	10850 (291)[1]			
	100	6.9	7600 (204)	14000 (375)	11800 (316)			
	125	8.6	9600 (257)	11650 (312)[1]				

1. Limited due to boost

- Shaded areas show where maximum operating inlet pressure for a given port diameter is exceeded.

P200 K Flow Capacities in SCFH (Nm³/h) of 0.6 Specific Gravity Natural Gas

Outlet Pressure, Spring Part Number, and Accuracy	Inlet Pressure		NPT 1-1/2 & 2 (DN 50) Body Size					
			Orifice Size, Inches (mm)					
	PSIG	BAR	1/4 (6.4)	3/8 (9.5)	1/2 (13)	3/4 (19)	1 (25)	1-3/16 (30)
5 PSIG (0.34 BAR) 655-659-003 ±0.5 PSIG (0.034 BAR)	10	0.69	500 (13.4)	1000 (26.8)	1250 (33.5)	1900 (50.9)	2150 (57.6)	2550 (68.3)
	15	1.0	550 (14.7)	1300 (34.8)	1650 (44.2)	2650 (71.0)	3200 (85.8)	4000 (107)
	20	1.4	600 (16.1)	1650 (44.2)	1950 (52.3)	3300 (88.4)	4100 (110)	5000 (134)
	25	1.7	800 (21.4)	1950 (52.3)	2150 (57.6)	3950 (106)	4650 (125)	
	30	2.1	1600 (42.9)	2150 (57.6)	2650 (71.0)	4500 (121)	5500 (147)	
	40	2.8	1950 (52.3)	2650 (71.0)	2900 (77.7)	5800 (155)		
	45	3.1	2250 (60.3)	2900 (77.7)	3450 (92.5)	6200 (166)		
	50	3.5	2450 (65.7)	3450 (92.5)	3800 (102)	6600 (177)		
	60	4.1	2600 (69.7)	3800 (102)	5350 (143)	8700 (233)		
	80	5.5	3700 (99.2)	5350 (143)	5900 (158)			
	100	6.9	4100 (110)	5900 (158)	7950 (213)			
	125	8.6	5450 (146)	7950 (213)				
5 PSIG (0.34 BAR) 655-659-003 ±1 PSIG (0.69 BAR)	10	0.69	1150 (30.8)	1700 (45.6)	2250 (60.3)	3400 (91.1)	4550 (122)	5650 (151)
	15	1.0	1300 (34.8)	2550 (68.3)	3150 (84.4)	5200 (139)	6350 (170)	8100 (217)
	20	1.4	1900 (50.9)	2950 (79.1)	3950 (106)	6000 (161)	8300 (222)	9950 (267)
	25	1.7	2200 (58.9)	3650 (97.8)	4850 (130)	7050 (189)	9950 (267)	
	30	2.1	2650 (71.0)	4000 (107)	5500 (147)	8750 (235)	11750 (315)	
	40	2.8	3100 (83.1)	5000 (134)	6900 (185)	10850 (291)		
	45	3.1	3450 (92.5)	5800 (155)	7650 (205)	11700 (314)		
	50	3.5	3800 (102)	6450 (173)	8900 (239)	14100 (378)		
	60	4.1	4400 (118)	7450 (200)	9800 (263)	14900 (399)		
	80	5.5	5950 (159)	9300 (249)	12000 (322)			
	100	6.9	7000 (188)	11250 (302)	14750 (395)			
	125	8.6	8450 (226)	13800 (370)				
5 PSIG (0.34 BAR) 655-659-003 ± 1% ABS ±0.20 psia (0.014 BAR)	10	0.69	350 (9.38)	400 (10.7)	650 (17.4)	800 (21.4)	1050 (28.1)	1300 (34.8)
	15	1.0	350 (9.38)	750 (20.1)	850 (22.8)	1250 (33.5)	1550 (41.5)	1650 (44.2)
	20	1.4	500 (13.4)	900 (24.1)	1050 (28.1)	1650 (44.2)	1800 (48.2)	2050 (54.9)
	25	1.7	600 (16.1)	1000 (26.8)	1200 (32.2)	1650 (44.2)	1950 (52.3)	
	30	2.1	700 (18.8)	1100 (29.5)	1300 (34.8)	1950 (52.3)	2550 (68.3)	
	40	2.8	1000 (26.8)	1350 (36.2)	1350 (36.2)	2450 (65.7)		
	45	3.1	1100 (29.5)	1450 (38.9)	1550 (41.5)	2550 (68.3)		
	50	3.5	1150 (30.8)	1600 (43.9)	1600 (42.9)	3050 (81.7)		
	60	4.1	1150 (30.8)	1750 (46.9)	2250 (60.3)	2400 (64.3)[1]		
	80	5.5	1600 (42.9)	2350 (62.9)	2750 (73.7)			
	100	6.9	1650 (44.2)	2400 (64.3)	3250 (87.1)			
	125	8.6	2150 (57.6)	3050 (81.7)				
5 PSIG (0.34 BAR) 655-659-003 ± 2% ABS ±0.39 psia (0.028 BAR)	10	0.69	450 (12.1)	450 (12.1)	1100 (29.5)	1500 (40.2)	1700 (45.6)	2250 (60.3)
	15	1.0	450 (12.1)	1150 (30.8)	1500 (40.2)	2150 (57.6)	2500 (67.0)	3300 (88.4)
	20	1.4	550 (14.7)	1400 (37.5)	1700 (45.6)	2800 (75.0)	3350 (89.8)	3900 (105)
	25	1.7	1250 (33.5)	1650 (44.2)	2050 (54.9)	3050 (81.7)	4200 (113)	
	30	2.1	1350 (36.2)	1850 (49.6)	2500 (67.0)	3750 (101)	4350 (117)	
	40	2.8	1700 (45.6)	2200 (58.9)	2900 (77.7)	4700 (126)		
	45	3.1	1800 (48.2)	2350 (62.9)	3500 (93.8)	5200 (139)		
	50	3.5	1900 (50.9)	2850 (76.4)	3950 (103)	5900 (158)		
	60	4.1	2100 (56.3)	2900 (77.7)	4300 (115)	6900 (185)		
	80	5.5	3100 (83.1)	4050 (109)	5500 (147)			
	100	6.9	3400 (91.1)	4800 (129)	6050 (162)			
	125	8.6	4400 (118)	5750 (154)				

1. Limited due to boost

- Shaded areas show where maximum operating inlet pressure for a given port diameter is exceeded.

P200 K Flow Capacities in SCFH (Nm³/h) of 0.6 Specific Gravity Natural Gas

Outlet Pressure, Spring Part Number, and Accuracy	Inlet Pressure		NPT 1-1/2 & 2 (DN 50) Body Size					
			Orifice Size, Inches (mm)					
	PSIG	BAR	1/4 (6.4)	3/8 (9.5)	1/2 (13)	3/4 (19)	1 (25)	1-3/16 (30)
10 PSIG (0.69 BAR) 655-697-010 ±1 PSIG (0.69 BAR)	10	0.69	550 (14.7)	800 (21.4)	1050 (28.1)	1200 (32.2)	1350 (36.2)	1750 (46.9)
	15	1.0	700 (18.8)	1200 (32.2)	1650 (44.2)	2500 (67.0)	2950 (79.1)	3800 (102)
	20	1.4	800 (21.4)	1650 (44.2)	2100 (56.3)	3150 (84.4)	4450 (119)	5350 (143)
	25	1.7	1500 (40.2)	2000 (53.6)	2750 (73.7)	4350 (117)	4900 (131)	6500 (174)
	30	2.1	1850 (49.6)	2300 (61.6)	3000 (80.4)	4850 (130)	6200 (166)	
	40	2.8	2150 (57.6)	3050 (81.7)	4100 (110)	6400 (172)		
	45	3.1	2300 (61.6)	3400 (91.1)	4600 (123)	7150 (192)		
	50	3.5	2500 (67.0)	3950 (106)	5100 (137)	7650 (205)		
	60	4.1	2900 (77.7)	4350 (117)	6000 (161)	8550 (229)		
	80	5.5	3900 (105)	5950 (159)	7550 (202)			
	100	6.9	4650 (125)	6800 (182)	9650 (259)			
	125	8.6	5300 (142)	8200 (220)				
10 PSIG (0.69 BAR) 655-697-010 ±2 PSIG (0.14 BAR)	10	0.69	950 (25.5)	1600 (42.9)	2450 (65.7)	3550 (95.1)	3600 (96.5)	4250 (114)
	15	1.0	1550 (41.5)	2350 (62.9)	2900 (77.7)	4900 (131)	6450 (173)	7600 (204)
	20	1.4	1900 (50.9)	3000 (80.4)	4000 (107)	6700 (180)	9000 (241)	10400 (279)
	25	1.7	2300 (61.6)	3800 (102)	5250 (141)	8150 (218)	10300 (276)	13050 (350)
	30	2.1	2750 (73.7)	4750 (127)	6000 (161)	9700 (260)	12200 (327)	
	40	2.8	3400 (91.1)	5850 (157)	7550 (202)	12250 (328)		
	45	3.1	3650 (97.8)	6300 (169)	8800 (236)	13650 (366)		
	50	3.5	3950 (106)	7250 (194)	9300 (249)	15100 (405)		
	60	4.1	4650 (125)	8150 (218)	11000 (295)	16650 (446)		
	80	5.5	5850 (157)	10750 (288)	13750 (369)			
	100	6.9	7250 (194)	12850 (344)	17100 (458)			
	125	8.6	8700 (233)	15750 (422)				
10 PSIG (0.69 BAR) 655-697-010 ± 1% ABS ±0.25 PSIG (0.10 BAR)	10	0.69	300 (8.04)	400 (10.7)	350 (9.38)	400 (10.7)	400 (10.7)	450 (12.1)
	15	1.0	350 (9.38)	450 (12.1)	650 (17.4)	750 (20.1)	850 (22.8)	1100 (29.5)
	20	1.4	350 (9.38)	650 (17.4)	700 (18.8)	900 (24.1)	1350 (36.2)	1350 (36.2)
	25	1.7	450 (12.1)	800 (21.4)	950 (25.5)	1200 (32.2)	1500 (40.2)	1900 (50.9)
	30	2.1	700 (18.8)	900 (24.1)	1050 (28.1)	1200 (32.2)	1900 (50.9)	
	40	2.8	700 (18.8)	1100 (29.5)	1150 (30.8)	1850 (49.6)		
	45	3.1	750 (20.1)	1100 (29.5)	1300 (34.8)	2100 (56.3)		
	50	3.5	800 (21.4)	1200 (32.2)	1300 (34.8)	2300 (61.6)		
	60	4.1	850 (22.8)	1300 (34.8)	1450 (38.9)	2300 (61.6)		
	80	5.5	950 (25.5)	1600 (42.9)	1600 (42.9)			
	100	6.9	1050 (28.1)	1950 (52.3)	2600 (69.7)			
	125	8.6	1050 (28.1)	2350 (62.9)				
10 PSIG (0.69 BAR) 655-697-010 ± 2% ABS ± 0.5 PSIG (0.20 BAR)	10	0.69	400 (10.7)	500 (13.4)	650 (17.4)	900 (24.1)	650 (17.4)	900 (24.1)
	15	1.0	450 (12.1)	550 (14.7)	850 (22.8)	1300 (34.8)	1550 (41.5)	1850 (49.6)
	20	1.4	450 (12.1)	1000 (26.8)	1100 (29.5)	1750 (46.9)	2200 (58.9)	2400 (64.3)
	25	1.7	550 (14.7)	1250 (33.5)	1600 (42.9)	2300 (61.6)	2700 (72.4)	3550 (95.1)
	30	2.1	800 (21.4)	1350 (36.2)	1800 (48.2)	2800 (75.0)	2800 (75.0)	
	40	2.8	1050 (28.1)	1650 (44.2)	2150 (57.6)	3500 (93.8)		
	45	3.1	1350 (36.2)	1900 (50.9)	2600 (69.7)	3700 (99.2)		
	50	3.5	1450 (38.9)	2100 (56.3)	2850 (76.4)	4300 (115)		
	60	4.1	1600 (42.9)	2300 (61.6)	3100 (83.1)	4400 (118)		
	80	5.5	2150 (57.6)	3000 (80.4)	4000 (107)			
	100	6.9	2450 (65.7)	3700 (99.2)	4950 (133)			
	125	8.6	2600 (69.7)	4450 (119)				

1. Limited due to boost

- Shaded areas show where maximum operating inlet pressure for a given port diameter is exceeded.

P200 O & H

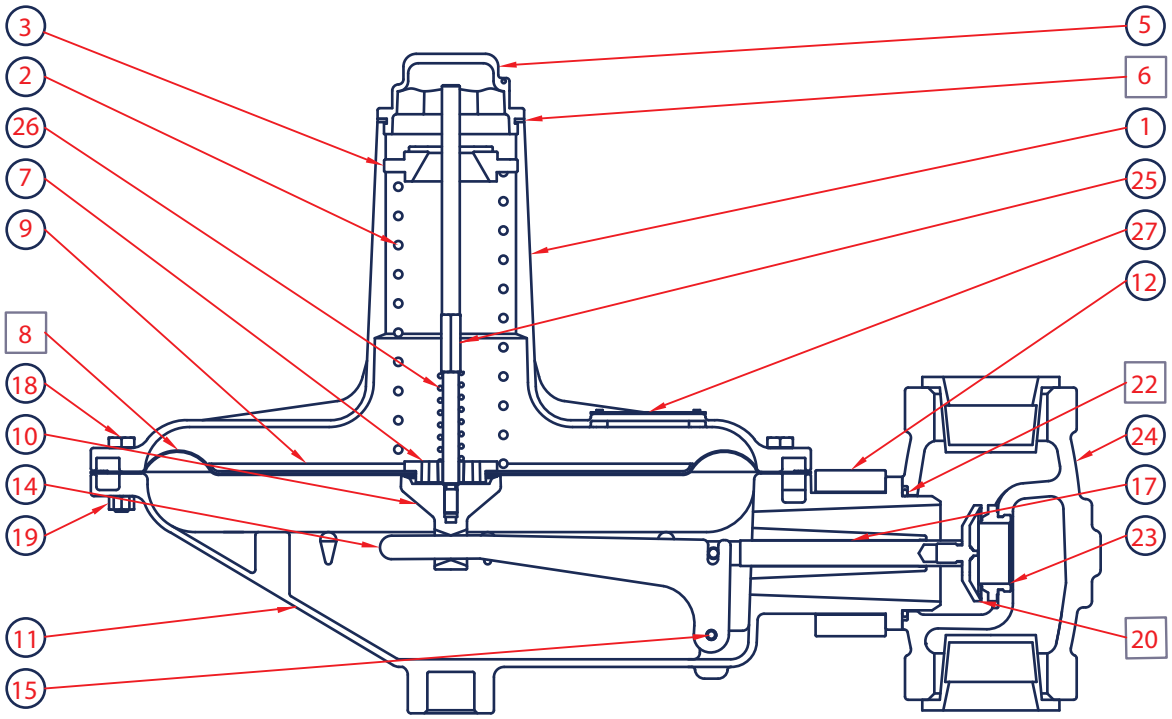

Parts included in P200 Low Pressure Repair Kit, 971-200-000

P201 K

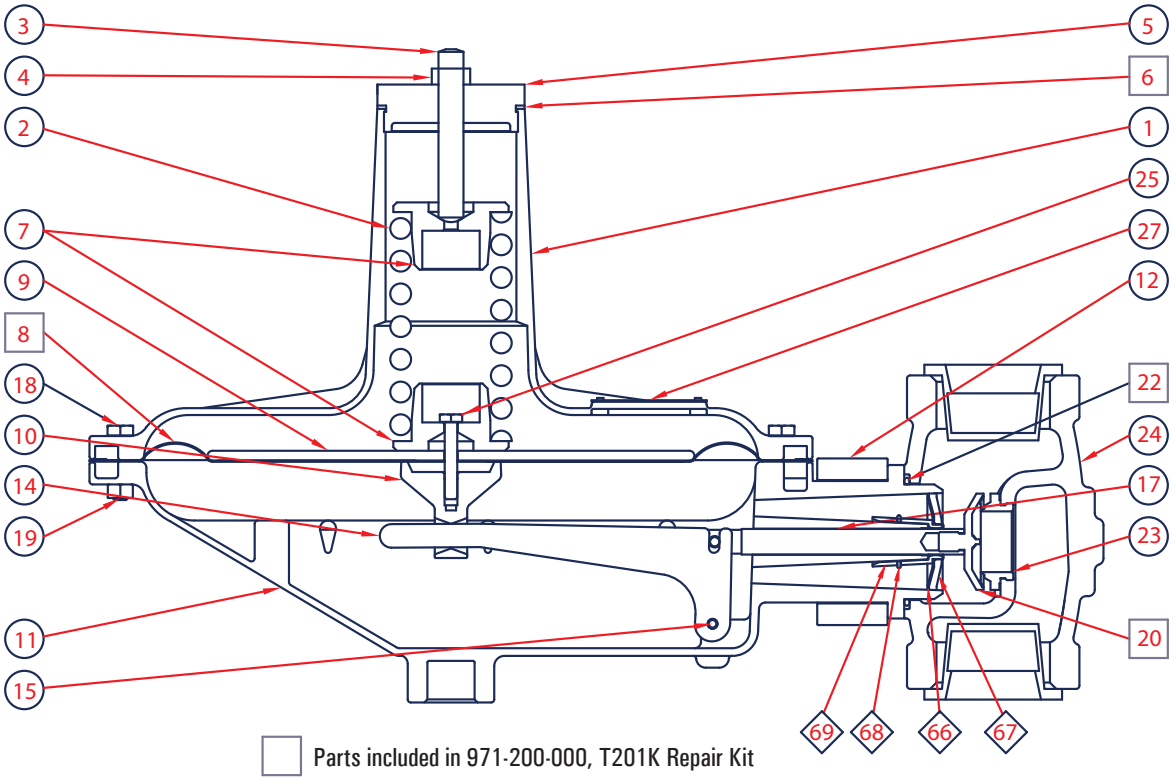

Parts included in 971-200-000, T201K Repair Kit

Parts included in 971-200-005, T200 Stabilizer Kit

P200 Parts List

Item	Description		Part Number
1	Bonnet (All except H/ 2-5 PSI)	1	604-230-000
	Pinned Spring Case (for 655-697-009 only)		800-132-000
2	Range Spring	1	See Table 2
3	Adjusting Screw	1	648-504-000
	Adjusting Screw (P201K only)		648-462-000
4	Hex Nut (P201K Only)	1	634-000-056
5	Closing Cap	1	610-058-000
	Closing Cap (P201K only)		610-061-000
6	Closing Cap Gasket	1	624-068-000
7	Upper/Lower Spring Seat	1	650-134-000
	Upper/Lower Spring Seat (P201K only)	2	626-105-000
8	Diaphragm, Nitrile	1	618-072-000
	Diaphragm, (P201K only), Nitrile		618-089-000
9	Diaphragm Head (P201 and P202)	1	628-277-000
	Diaphragm Head (P201H and P202H)		628-279-000
	Diaphragm Head (P201K only)		628-280-000
10	Pusher Post (P201, P201H, P201K & P201S)	1	637-326-000
	Pusher Post (P202, P202H & P201S)		637-317-000
11	Lower Casing Assembly	1	629-219-000
12	Union Ring	2	644-056-000
13	Spring Pin	1	635-065-000
14	Lever	1	730-000-000
15	Pin	1	635-064-000
16	Machine Screw	2	648-503-000
17	Valve Stem Assembly	1	827-013-000
18	Cap Screw	12	648-506-000
19	Hex Nut	12	634-174-000
20	Disk Holder Assembly, Nitrile	1	822-033-000
21	Cap Screw	2	648-506-001
22	O-Ring, Nitrile	1	649-000-152
23	Orifice,1/4"	1	688-016-000
	Orifice, 3/8"		688-016-001
	Orifice, 1/2"		688-016-002
	Orifice, 3/4"		688-016-003
	Orifice, 1"		688-016-004
	Orifice, 1-3/16"		688-016-005
24	Iron Body, 2" NPT	1	664-309-000
	Steel Body, 2" NPT		664-342-000
	Iron Body, 1.5" NPT		664-345-000
	Steel Body, 1.5" NPT		664-347-000
	Iron Body, 1.25" NPT		664-345-001
	Steel Body, 1.25" NPT		664-347-001
	Iron Body, 1.5 x 2" NPT		664-349-000
	Steel Body, 1.5 x 2" NPT		664-349-001
	Iron Body, 125 FF 10", 2"		664-377-000
	Steel Body, 150 RF 10", 2"		664-378-000
	Steel Body, 150 RF 10", 1.5"		664-393-000
25	Cap Screw (P201 and P201H)	1	648-506-003
	Cap Screw (P201K only)		648-506-002
	Stem (P202, P202H & P201S)		648-505-000
26	Relief Valve Spring (P202, 202H & P201S)	1	655-697-001
27	Nameplate	1	632-526-000
28	Flapper Stem	1	661-008-000
29	Lower Flapper	1	661-009-000
30	Upper Flapper	1	661-010-000
31	Seat Ring	1	650-136-000
32	Self-Tapping Screw	3	648-502-000
33	Vent Port Spring	2	655-697-000
34	Screen	1	647-018-000
35	Snap Ring	1	693-021-000
66	Stabilizer Gasket (P201S and P202S)	1	624-088-000
67	Stabilizer Frame (P201S and P202S)	1	704-008-000
68	Stabilizer Snap Ring (P201S and P202S)	1	693-028-000
69	Stabilizer Neck (P201S and P202S)	1	608-084-000

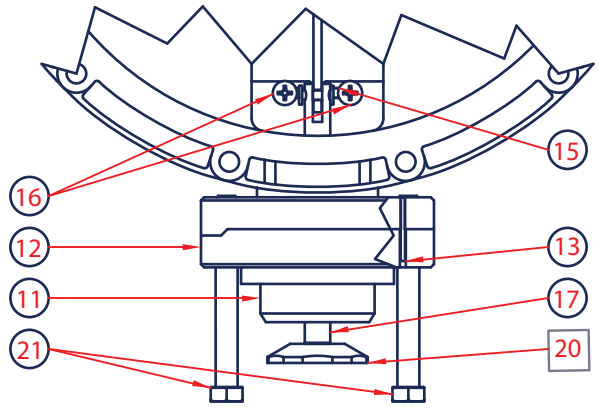

☐ Parts included in P200 Repair Kits, 971-200-000 & 971-200-001

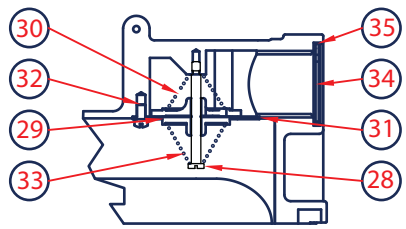

P200P Parts List

Item	Description	Qty.	Part Number
11	Lower Casing	1	629-219-001
17	Valve Stem	1	651-097-001
36	Retaining Ring	1	693-027-000
37	O-ring	1	649-000-005
38	O-ring	1	649-309-004
39	Wiper Ring	1	644-061-000
40	Stem Adaptor	1	653-058-000

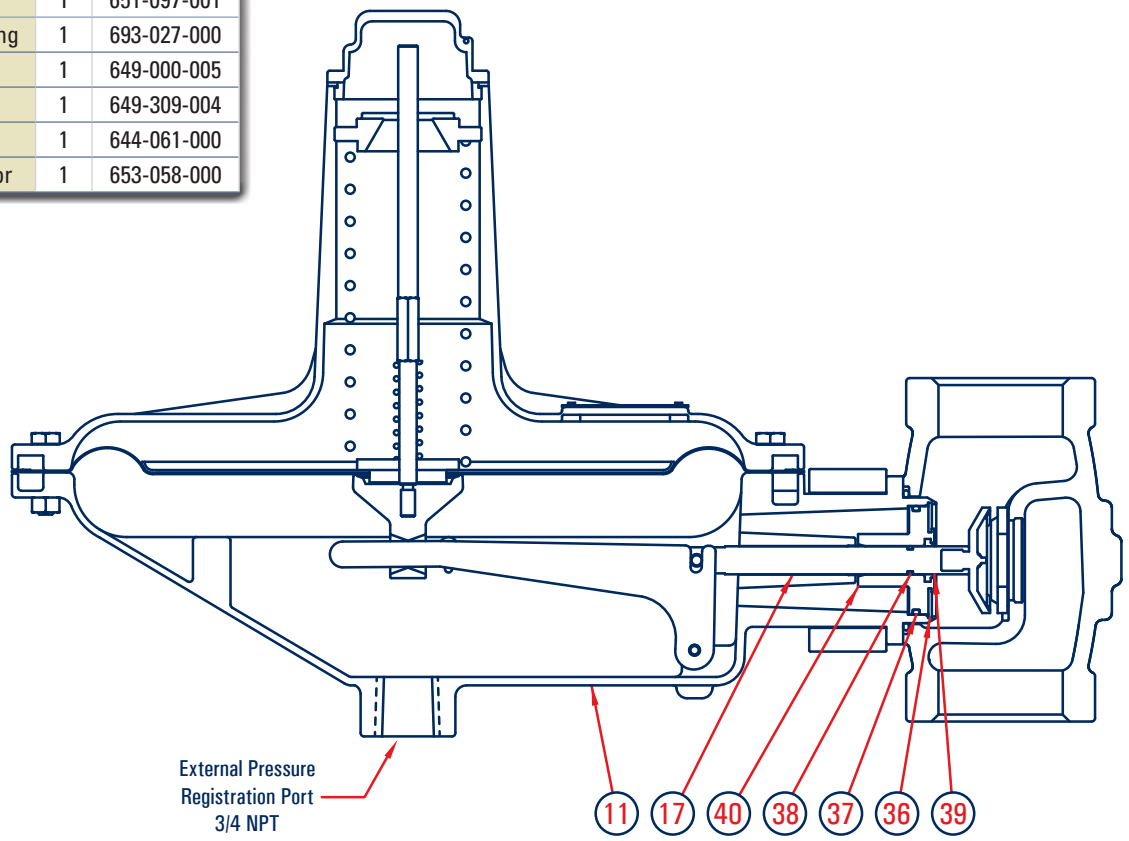

P200P Body Orientation*

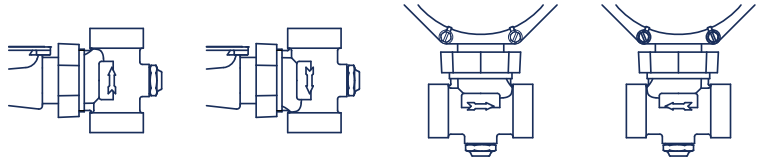

UP	DOWN	RIGHT	LEFT
1	2	3	4

* Port orientation is based on the body's "Out" port location in relation to the top view of the regulator.

P200P Vent Positions

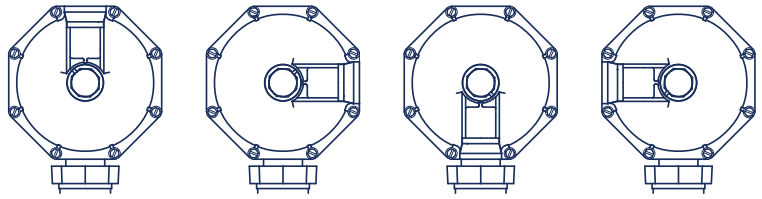

12	3	6	9
C	D	E	F

F200 Pilot Operated Pressure Regulator

- External or Internal Pressure Registration
- Minimize Sudden Downstream Load Change
- Ideal for Fix Factor Billing
- Quick Response Time / High Accuracy

The F200 series is a manual, direct acting, self-operating, spring loaded, adjustable regulator. The F200 series is used in applications where pressure reduction is required. The regulator will reduce the risk of "shock" from abrupt changes of downstream conditions. This can help prevent safety equipment from shutting an operation down.

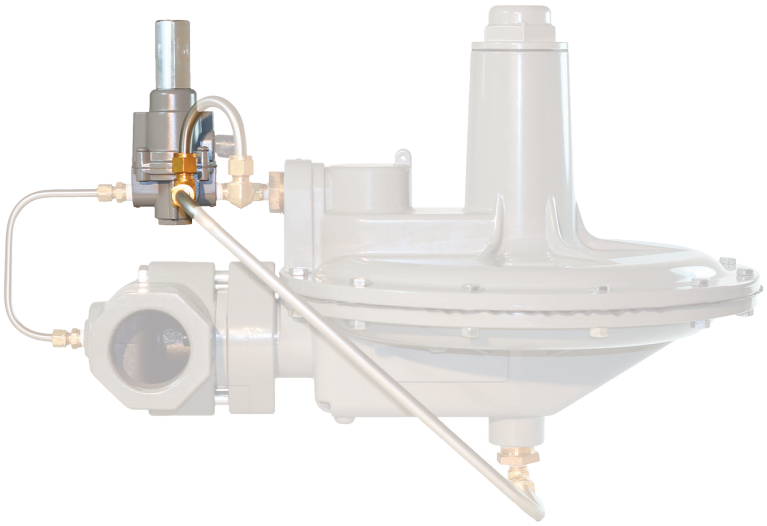

Applications

- Compressors
- Gas Engines
- Service Regulators

Materials of Construction

Adjusting Screw	Aluminum / Zinc Plated Steel
Body	Ductile Cast Iron or WCB Steel
Bonnet	Aluminum
Closing Cap	Aluminum
Diaphragm	Nitrile
Lower Casing	Aluminum
Molded Seat Assembly	Nitrile
Orifice	Aluminum
Upper/Lower Spring Seat	Aluminum / Brass
Flange	Ductile Cast Iron / WCB Steel

F200 Series Maximum Inlet Pressure

Table 1

Orifice Inches	Range	Maximum Inlet Pressure	
		PSIG	BAR
1/4"	Any	125	8.618
3/8"	Any	125	8.618
1/2"	Any	100	6.894
3/4"	Any	60	4.136
1"	Any	25	1.723
1-3/16'	Any	15	1.034

Specifications

Maximum Inlet	See Table 1	
Maximum Emergency Outlet	15 PSIG	
Pressure Ranges	See Table 2	
Port Sizes	1.25 NPT	
	1.5 NPT	
	1.5 NPT x 2 NPT	
	2 NPT	
Orifice Sizes	1/4"	
	3/8"	
	1/2"	
	3/4"	
	1"	
	1-3/16"	
End Connections	NPT	
	150 RF Flange	Steel Units Only
	125 FF Flange	Iron Units Only
Temperature Range	-20˚F to 180˚F	
	-29˚C to 82˚C	
Approx. Weight	27 lbs. (12.25 kg)	

F200 Main Spring Ranges

Table 2

Model	Spring Ranges		Spring Color	Part Number
	WC or PSIG	mBAR		
F200	4 - 14 WC	14.94 - 34.87	Red	655-697-003
	14 - 2 PSIG	34.87 - 137.89		
	PSIG	BAR		
F200	2 - 10	0.137 - 0.689	Black	655-697-004

F200 Pilot Spring Ranges

Model	Spring Ranges		Spring Color	Part Number
	WC or PSIG	mBAR		
F200	4 - 14 WC	14.94 - 34.87	White	655-765-000
	14 - 2 PSIG	34.87 - 137.89	Yellow	655-749-000
	PSIG	BAR		

F200 Part Matrix

F200				0					
									Version
	D								Internal Registration
	P								External Registration
									Port Size
		12							1.25 NPT
		14							1.5 NPT
		15							1.5 x 2 NPT
		16							2 NPT
									Spring Range - WC or PSI / mBAR
			014						4 - 14" WC 10 - 35
			002						14" - 2 PSIG 35 - 138
			010						2 - 10 PSIG 138 - 689
				0					Place Holder
									Special Construction
					0				None
					A				150 RF (1.5" & 2" Steel Only)
					E				125 FF (2" Iron Only)
									Orifice
						4			1/4"
						6			3/8"
						8			1/2"
						B			3/4"
						D			1"
						F			1-3/16"
									Port Orientation
							3		Right
							4		Left
									Body Material
								0	Iron
								2	Steel

F200 Dimensions

Body Size	A			B	C	D		
Inch-es	NPT	125 FF Flange	150 RF Flange			NPT	125 FF Flange	150 RF Flange
1.25	6.13			11.03	18.09	1.85		
1.5	6.13		10	11.03	18.09	1.85		2.5
1.5 x 2	6.13			11.03	18.09	1.85		
2	6.13	10	10	10.59	17.66	2.15	4.42	4.42

F200 Standard

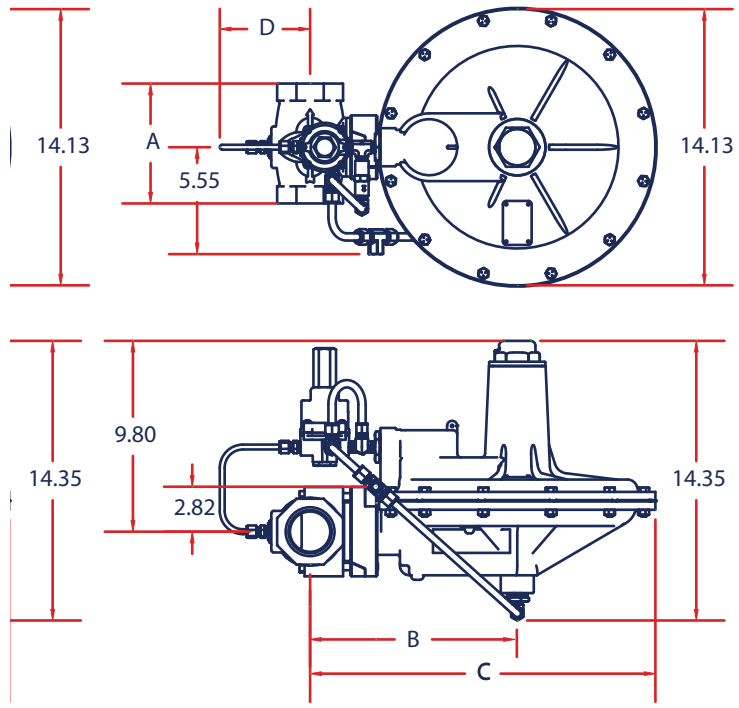

F200D Flow Capacities in SCFH of 0.6 Specific Gravity Natural Gas

Outlet Pressure, Spring Part Number, and Accuracy	Inlet Pressure		NPT 2 (DN 50) Body Sizes					
			Orifice Size, Inches (mm)					
	PSIG	BAR	1/4	3/8	1/2	3/4	1	1-3/16
4 inches WC (15 mbar) 655-697-003 1" WC Droop	2	0.14	697	1576	3123	4901	7009	6730
	5	0.34	999	2596	4568	8477	9402	8568
	10	0.69	1517	3577	6329	12387	11613	10219
	15	1.00	1835	4367	7753	13161	12697	11303
	25	1.70	2632	6185	12015	15871	14168	
	30	2.10	2903	6619	12387	15484		
	60	4.10	4707	11535	19742	17032		
	75	5.17	6200	14632	18581			
	100	6.90	7974					
	125	8.60	8825					
7 inches WC (17 mbar) 655-697-003 1" WC Droop	2	0.14	650	1626	2671	4835	7432	7742
	5	0.34	1006	2582	4346	8524	9414	5574
	10	0.69	1533	3750	5806	12000	13279	10245
	15	1.00	1835	4586	7907	15097	14710	11806
	25	1.70	1835	6908	11342	17806	16258	
	30	2.10	2942	6674	11674	17419		
	60	4.10	4877	11321	19355	18194		
	75	5.17	6286	15148	20903			
	100	6.90	7897					
	125	8.60	8826					
1 PSIG / 0.069 BAR 655-697-003 1% Droop	2	0.14	530	1379	2300	4102	6635	8195
	5	0.34	1030	2599	4205	8193	12227	12307
	10	0.69	1548	3799	6252	12636	17814	16490
	15	1.00	1870	4817	7805	16656	20013	16689
	25	1.70	2690	6968	10967	22735	21215	
	30	2.10	2870	7082	12494	22875		
	60	4.10	4800	11343	19941	25990		
	75	5.17	5820	14074	23788			
	100	6.90	7900	16241	29032			
	125	8.60	9850	11159				

1. Limited due to boost
   - Shaded areas show where maximum operating inlet pressure for a given port diameter is exceeded.
2. When using the 4" to 14" range spring in combination with the 3/8" or 1/2" orifice, the boost to the outlet pressure (P2) will exceed 1% of the set pressure when the inlet pressure (P1) is above 30 PSIG. This will occur only on the internal registration model (D) and does not occur on the external registration model (P).

F200 Flanged

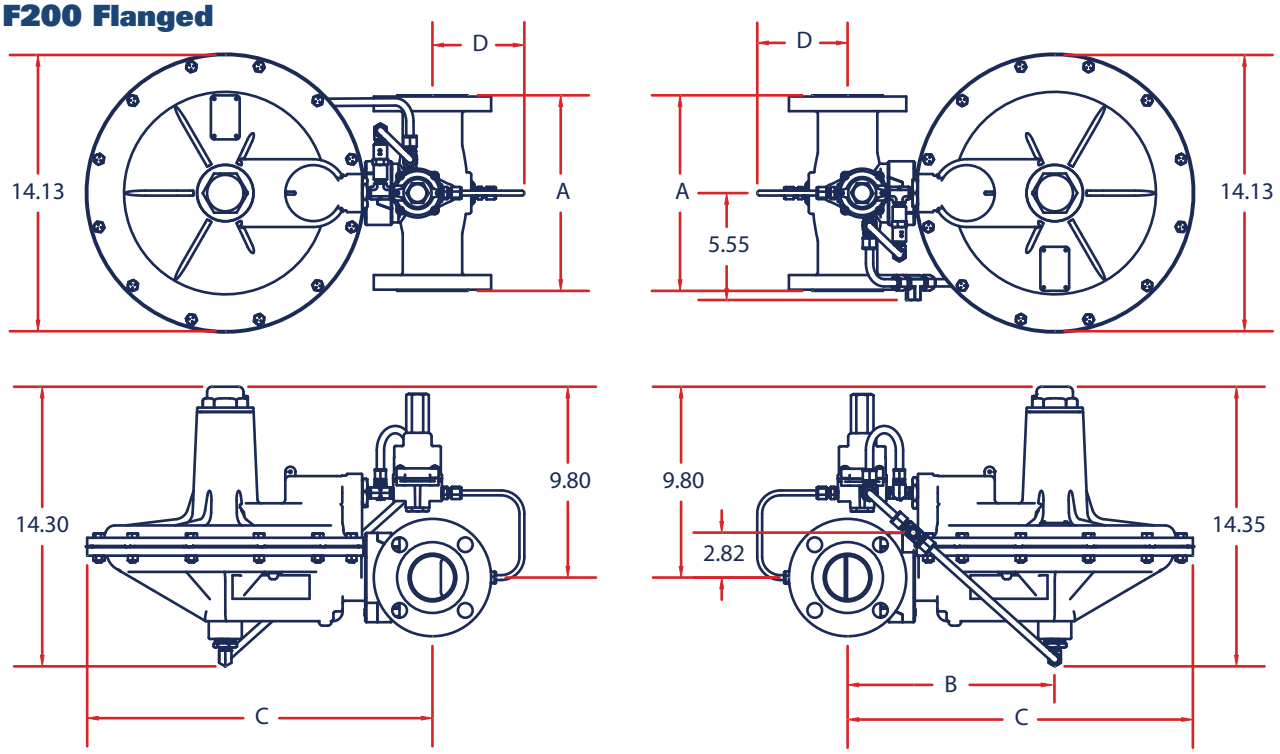

F200D Flow Capacities in SCFH of 0.6 Specific Gravity Natural Gas

Outlet Pressure, Spring Part Number, and Accuracy	Inlet Pressure		NPT 2 (DN 50) Body Sizes					
			Orifice Size, Inches (mm)					
	PSIG	BAR	1/4	3/8	1/2	3/4	1	1-3/16
2 PSIG / 0.138 BAR 655-697-004 1% Droop	5	0.34	885	2204	3876	7918	11296	13256
	10	0.69	1500	3638	6120	11761	17727	15753
	15	1.00	1872	4697	7826	15924	20141	17475
	25	1.70	2605	6880	11090	23775	22475	
	30	2.10	2816	7139	12465	25837		
	60	4.10	4600	11116	19794	26585		
	75	5.17	5763	15070	23514			
	100	6.90	7600	17534	29662			
	125	8.60	8910	21383				
2 PSIG / 0.138 BAR 655-697-004 1% Droop	5	0.34	914	2200	3684	7356	11198	13236
	10	0.69	1525	3547	5804	11212	17230	16737
	15	1.00	1874	4566	7609	16223	19974	17335
	25	1.70	2607	6892	11098	23785	23328	
	30	2.10	2817	7267	12367	23716		
	60	4.10	4740	11421	19742	27821		
	75	5.17	6200	14490	23297			
	100	6.90	7500	18396	28595			
	125	8.60	8846	22076				
5 PSIG / 0.345 BAR 655-697-004 1% Droop	10	0.69	1269	3082	5173	10665	13034	17165
	15	1.00	1740	4343	7501	14764	22517	19215
	25	1.70	2641	6899	11045	18844	24540	
	30	2.10	2877	6672	12462	24553		
	60	4.10	4770	11591	19461	31796		
	75	5.17	6236	14801	22500			
	100	6.90	8137	18096	28504			
	125	8.60	8893	21553				
10 PSIG / 0.689 BAR 655-697-004 1% Droop	15	1.00	1430	3476	6027	11837	14849	18153
	25	1.70	2584	6899	11045	18844	29278	
	30	2.10	2897	6421	12346	22853		
	60	4.10	4810	8926	19405	37290		
	75	5.17	6394	14869	21782			
	100	6.90	8155	17656	28725			
	125	8.60	8925	21365				

1. Limited due to boost
   - Shaded areas show where maximum operating inlet pressure for a given port diameter is exceeded.
2. When using the 4" to 14" range spring in combination with the 3/8" or 1/2" orifice, the boost to the outlet pressure (P2) will exceed 1% of the set pressure when the inlet pressure (P1) is above 30 PSIG. This will occur only on the internal registration model (D) and does not occur on the external registration model (P).

F200 Parts List

Item	Description		Qty.	Part Number
2	Closing Spring 4" WC - 2 PSIG		1	655-697-003
	Closing Spring 2 - 10 PSIG			655-697-004
7	Diaphragm Relief Plug		1	650-134-000
8	Diaphragm		1	618-072-000
9	Diaphragm Head		2	628-277-000
10	Pusher Post		1	637-326-001
11	Lower Casing Assembly F200D		1	629-219-002
	Lower Casing Assembly F200P			629-219-001
17	Valve Stem Assembly F200D		1	827-013-000
	Valve Stem Assembly F200P			827-013-001
24	2 NPT	Iron Body	1	664-443-000
		Steel Body		664-443-001
	1.5 NPT	Iron Body		664-442-000
		Steel Body		664-442-002
	1.5 x 2 NPT	Iron Body		664-441-000
		Steel Body		664-441-001
	1.25 NPT	Iron Body		664-442-001
		Steel Body		664-442-003
	125 FF 10"	Iron Body		664-444-000
	150 RF 2"	Steel Body		664-444-001
	150 RF 1.5"	Steel Body		664-444-002
25	Stem		1	689-020-000
38	Retaining Ring (F200P Only)		1	693-027-000
39	O-ring Lg (F200P Only)		1	649-309-004
40	O-ring (F200P Only)		1	649-000-005
41	Wiper Ring (F200P Only)		1	644-061-000
42	Stem Adaptor (F200P Only)		1	653-058-000
60	Spring Retainer		1	626-121-000
61	Hex Nut		1	634-000-054
63	Spring Seat		1	650-198-000
64	Case Bushing 3/4 x 1/4		1	622-076-000
65	Bonnet Bushing 1 x 1/4		1	622-075-000
66	Tee M1/4 x M1/4 x M1/4		1	622-077-000
67	Relief Valve		1	678-061-000
68	Relief Valve Tubing		1	660-124-000
69	Right Angle Tee 1/4 x 3/8 x 3/8		1	622-074-000
70	Straight 1/4 x 1/4 Fitting		2	622-045-000
71	Pilot Supply Tubing		1	660-122-000
72	Elbow 1/4 x 3/8		2	622-061-000
73	In-Line Tee F1/4 x 3/8 x 3/8 (F200P Only)		1	622-078-000
74	Sensing Tubing F200D		1	660-123-000
75	Sensing Tubing F200P Short End		1	660-125-000
76	Sensing Tubing F200P Long End		1	660-126-000
77	PL84 Pilot 4" - 14" WC		1	832-036-000
	PL84 Pilot 14" WC - 2 PSIG			832-036-001
	PL84 Pilot 2 -10 PSIG			832-036-002

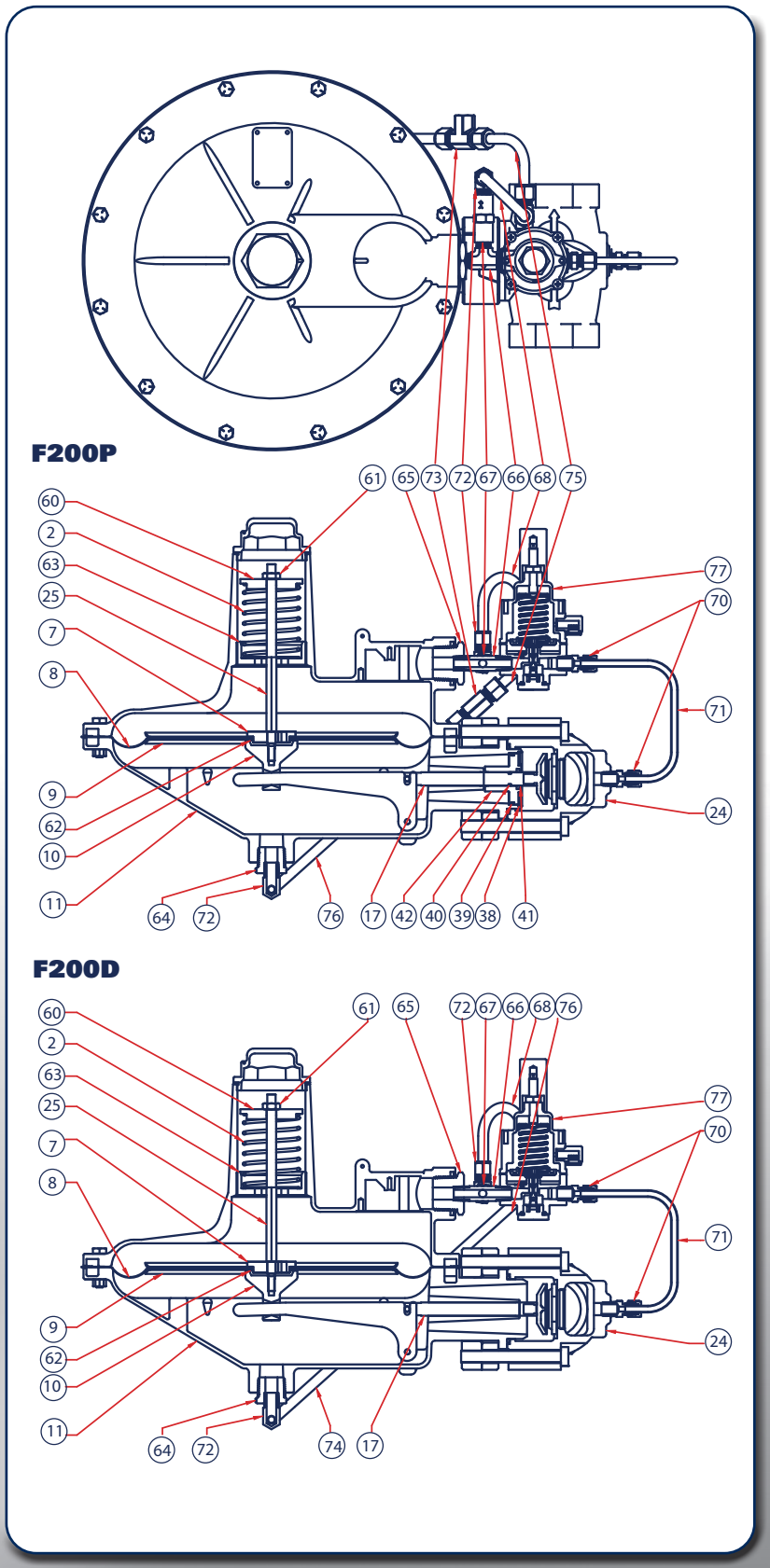

BelGAS™
A DIVISION OF MARSH BELLOFRAM

F200 Body Orientation*

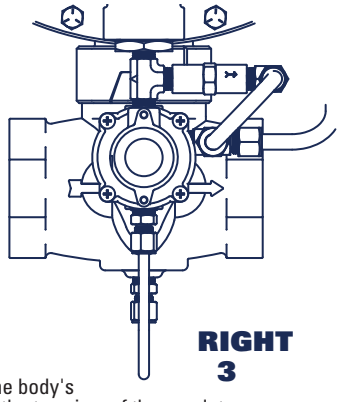

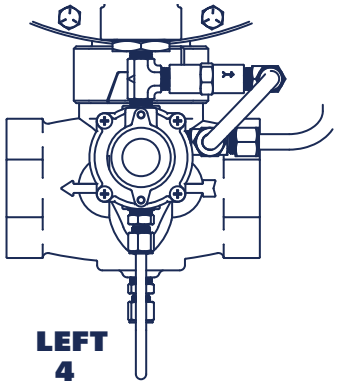

* Port orientation is based on the body's "Out" port location in relation to the top view of the regulator.

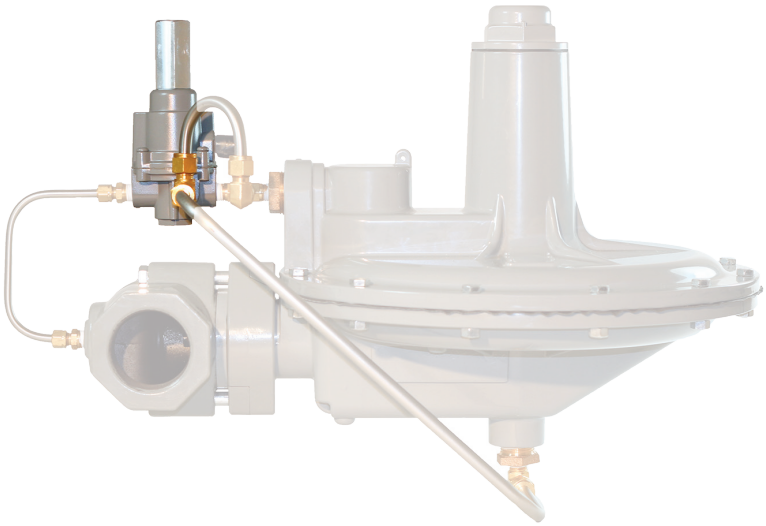

01CW18WEB

P203 Pressure Reducing Regulator

The P203 and P203H are available with a true monitor regulator, which acts independently of the main regulator. The monitor provides equivalent overpressure protection when compared to a standard two-regulator monitor setup. If one regulator fails, the other regulator provides control and overpressure protection.

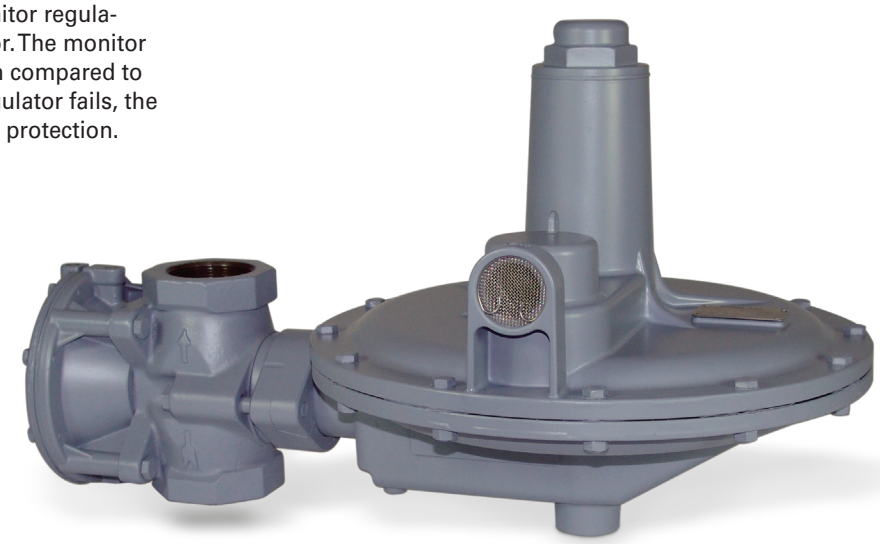

Applications

- Commercial / Industrial / Service
- Gas Engine Control
- Gate Applications

Features

- Integral Monitoring
- Fast Acting Minimizing Shock
- Internal Relief

Materials of Construction

Adjusting Screw	Aluminum
Body	Ductile Cast Iron
Bonnet	Aluminum
Closing Cap	Aluminum
Diaphragm	Nitrile
Lower Casing	Aluminum
Molded Seat Assembly	Nitrile
Orifice	Aluminum

Specifications

Maximum Inlet	See Table 1	
Maximum Emergency Outlet	15 PSIG	
Port Sizes	1.5 NPT	
	1.5 NPT x 2 NPT	
	2 NPT	
Orifice Sizes	1/4"	
	3/8"	
	1/2"	
	3/4"	
	1"	
	1-3/16"	
End Connections	NPT	
	125 FF Flange	2" Iron Units Only
Temperature Range	-20˚F to 180˚F	
	-29˚C to 82˚C	

P203 Max Inlet Pressures

Table 1

Orifice Inches	Range	Maximum Inlet Pressure	
		PSIG	BAR
1/4"	Any	125	8.618
3/8"	Any	125	8.618
1/2"	Any	100	6.894
3/4"	Any	60	4.136
1"	0 -5" WC thru 0.5-1.0 PSIG	25	1.723
	1-1.6 thru 1.25-3.25 PSIG	30	2.068
1-3/16"	0-5" WC thru 0.5-1.0 PSIG	13	0.896
	1-1.6 thru 1.25-3.25 PSIG	14	0.965

Type	Control Spring Part Number and Color	Maximum Downstream Pressure with Integral Monitor in Operation		Maximum Flow Through Internal Relief Valve with Integral Monitor in Operation[1]		Monitor Spring Number & Color	Outlet Pressure Range		Number of Lower Spring Seats
		PSIG	mBAR	SCFH	Nm³/h		WC or PSIG	mBAR	
P203	655-697-002, Brown	0.8	60	950	25.5	655-746-000, Green	0-5" WC	0-12	0
	655-697-003, Red	0.8	60	1000	26.8		4-9.5" WC	10-24	1
	655-697-004, Black								
	655-697-005, White	1.4	100	1200	32.2		8-14" WC	20-35	2
		1.4	100	1350	36.2	655-746-001, Red	8-12" WC	20-30	0
		1.8	120	1600	42.9		10-20" WC	25-50	1
		2.2	150	1800	48.2	655-746-002, Blue	11-21" WC	27-52	0
	655-697-006, Dark Green	2.8	190	1900	50.9	655-746-001, Red	14-28" WC	35-70	2
		3.0	210	2000	53.6	655-746-002, Blue	18-33" WC	45-82	1
		3.0	210	2200	60.0	655-746-003, Silver	0.5-1.0 PSIG	34-69	0
P203H	655-697-007, Dark Blue	3.8	260	2200	60.0	655-746-002, Blue	1.0-1.6 PSIG	69-110	2
		4.0	280	2500	67.0	655-746-003, Silver	0.75-1.6 PSIG	52-110	1
	655-697-008, Orange	5.0	350	3000	80.4	655-746-003, Silver	1.25-2.25 PSIG	86-155	2
		6.0	410	3000	80.4	655-746-003, Silver	1.25-3.25 PSIG	86-224	3

1. Flow of 0.6 specific gravity natural gas in SCFH at 60°F and 14.7 PSIA and Nm³/h at 0°C and 1.01325 BAR.

How Does the P203 Series Work?

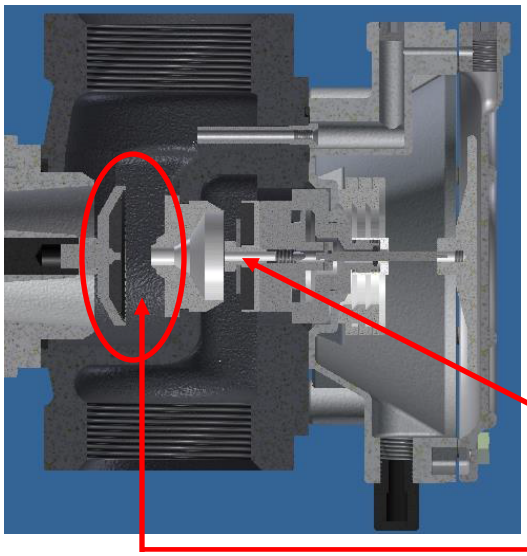

Under normal operational conditions, the P203 Series performs as the P200. When there is a demand downstream of the regulator, the main valve disk moves away from the orifice to allow flow. The Monitor diaphragm and piston are always in motion based on outlet feedback though the pitot tube at the outlet.

Secondary or monitor orifice & valve disk

Main orifice & valve disk

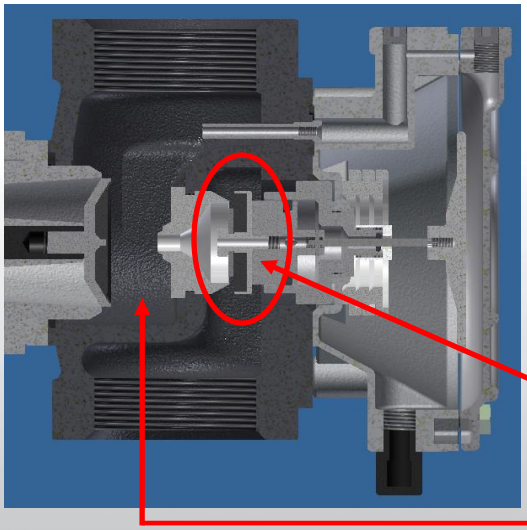

The monitor module will activate when the system experiences a failure such as the main valve disk is stuck open or the lever disengages from the valve stem assembly. When the P203 main regulator fails to regulate and the output pressure climbs, the increased output pressure will move the monitor valve disk towards the secondary sealing surface of the orifice.

Monitor valve disk starts to regulate

Main seat lodged open

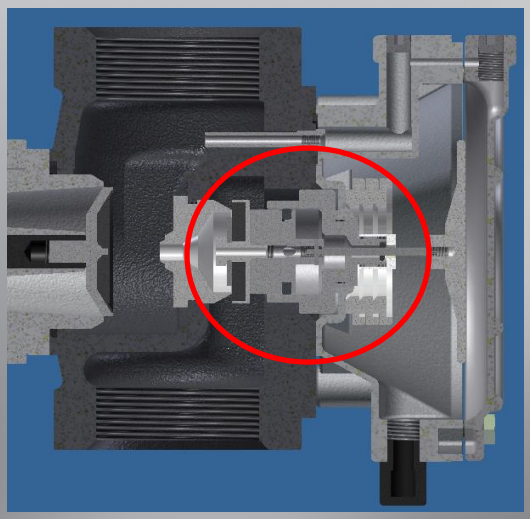

Once the output pressure has increased 7″ to 28″ WC above the set operating output pressure, the monitor valve disk will fully seal on the secondary sealing surface of the orifice. At this point, the only supply pressure that is passing through the unit is passing through the tiny bleed hole on the disk holder screw and venting directly out the main regulator diaphragm assembly and through the main regulator's vent assembly.

BelGAS P203 Part Number Selection

Before attempting to select a BelGAS P203, several pieces of information should be known: port size, the supply pressure the unit operates at normally, the output pressure the unit operates at normally, the downstream flow requirement during normal operation, the maximum amount of output pressure the unit is allowed to have during an over pressurization situation, and the media the unit will be regulating.

Example #1

Known Requirements
1.5 NPT
60 PSIG inlet
9" WC outlet under normal conditions
18,000 SCFH air
Should not rise above 1.3 PSIG

Port Size
The code of for 1.5 NPT in the Port Size section is 14.
P203X14XX0XXXXX

Outlet Pressure Range
It's best to operate in the middle of the range in order to preserve the life of the unit's springs. Since the output pressure is supposed to be a 9" WC during normal operation, the unit could be either the G2 or R0 option from the Monitor Range section. G2 has a range of 8-14" WC and R0 has a range of 8-12" WC. That means the code for the Spring Coordination section is 18 and the code for the Version section is 0.
P203014180XXXG2 or P203014180XXXR0

Downstream Flow Requirements
The unit needs to flow at least 18,000 SCFH under normal operation. According to P200 Series flow tables for that spring range and outlet pressure droop, both the 1/2" orifice and the 3/4" orifice generated more than 18,000 SCFH. The 1/2" orifice generates 19,300 SCFH flow of air. The 3/4" orifice generates 20,000 SCFH flow of air.
P2030141808XXG2 or P2030141808XXR0
or P203014180BXXG2 or P203014180BXXR0

Body and Bonnet Orientation
BelGAS offers sixteen different body/bonnet orientation combination controlled through two digits in the part number.
If no special orientation is required the 1D orientation is selected.
P20301418081DG2 or P20301418081DR0 or P203014180B-1DG2 or P203014180B1DR0

Over Pressurization Conditions
Since the unit cannot climb above 1.3 PSIG, the R0 option for Monitor Range section is eliminated. The R0 option for the Monitor Range can climb to 1.4 PSIG per the table of the catalog.
P20301418081DG2 or P203014180B1DG2

Based on the criteria provided, both regulators listed above can handle the application. However, the 3/4" orifice will flow more than the 1/2" orifice. So if more flow rate is desirable in this particular function: P203014180B1DG2

Example #2

Known Requirements
2" 125 FF
40 PSIG inlet
2.4 PSIG outlet under normal conditions
12,000 SCFH air
Rotometer present downstream of the regulator

Port Size
The code for 2" 125FF in the Port Size section is 16. In the Special Construction section, you should put code E.
P203X16XXEXXXXX

Version
Since there is a rotometer downstream of the regulator. the code for the Version selection should be an S. This allows for the installation of a throat stabilizer in the neck of the regulator. The stabilizer will allow the unit to function with minimal amount of cavitation.
P203S16XXEXXXXX

Outlet Pressure Range
It's best to operated in the middle of the range in order to preserve the life of the unit's springs. Since the output pressure is supposed to be at 2.4 PSIG during normal operation, the unit should be the S3 option from the Monitor Range section. S3 has a range of 1.25 - 3.25 PSIG. That means the code for the Spring Coordination section is 03.
P203S1603EXXXS3

Downstream Flow Requirements
The unit needs to flow at least 12,000 SCFH under normal operation. According to the P200 Series flow tables for that spring range and outlet pressure droop, the 3/4" orific can generate more than 12,000 SCFH. The 3/4" orifice generates 13,800 SCFH flow of air.
P203S1603EBXXS3

Body and Bonnet Orientation
BelGAS offers sixteen different body/bonnet orientation combination controlled through two digits in the part number. If no special orientation is required, the 1D orientaten is selected.
P203S1603EB4FS3

P203 Dimensions

Body Size	A		B	C	D	
Inches	NPT	125 FF Flange			NPT	125 FF Flange
1.5	6.13		11.03	18.09	4.18	
1.5 x 2	6.13		11.03	18.09	4.18	
2	6.13	10	10.59	17.66	4.61	4.61

P203 2" NPT 125FF

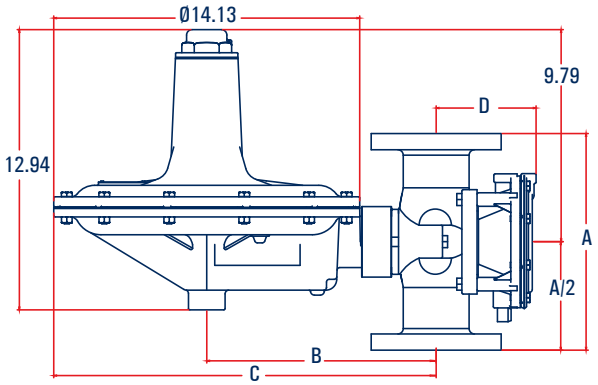

P203 2" NPT

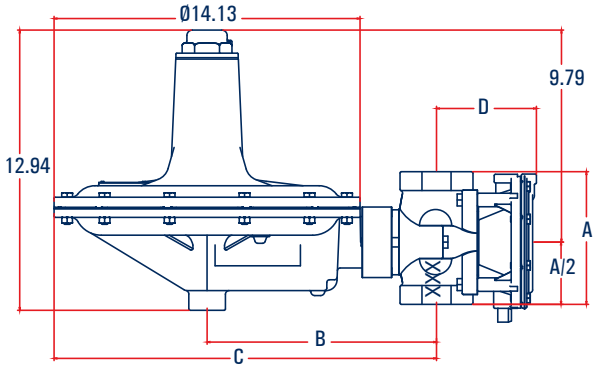

P203 1-1/2" NPT

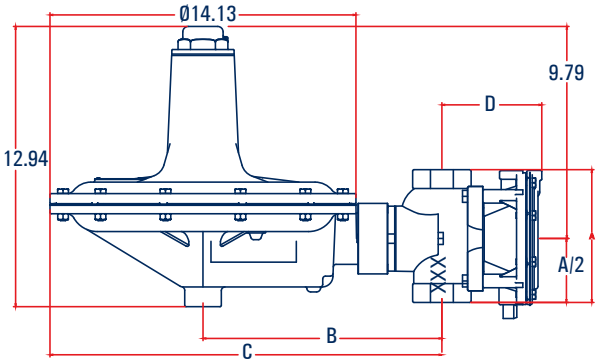

P203 Regulator Rebuild Kits

	Kit Includes	Part Number
P203	**Main Regulator -** Diaphragm, disk holder assembly, cap gasket and body/lower casing O-ring. **Monitor -** disk holder assembly, diaphragm, pilot tube O-ring, piston guide O-rings, piston ring, and piston assembly O-ring	971-203-000

P203 Stabilizer Kit

	Kit Includes	Part Number
P203, P203H, and P203S	Stabilizer kit for downstream dampening	971-200-004

P203 Conversions Kits

	Kit Includes	Part Number
P203 and P203S	Brown main spring, green monitor spring, no spring seats	971-203-0G0
	Red main spring, green monitor spring, one spring seat	971-203-6G1
	Black main spring, green monitor spring, one spring seat	971-203-9G1
	White main spring, green monitor spring, two spring seats	971-203-0G2
	White main spring, red monitor spring, no spring seats	971-203-0R0
	White main spring, red monitor spring, one spring seat	971-203-0R1
	White main spring, blue monitor spring, no spring seats	971-203-0B0
	Green main spring, red monitor spring, two spring seats	971-203-0R2
	Green main spring, blue monitor spring, one spring seat	971-203-0B1
	Green main spring, silver monitor spring, no spring seats	971-203-0S0
P203H and P203S	Blue main spring, blue monitor spring, two spring seats	971-203-0B2
	Blue main spring, silver monitor spring, one spring seat	971-203-0S1
	Orange main spring, silver monitor spring, two spring seats	971-203-0S2
	Orange main spring, silver monitor spring, three spring seats	971-203-0S3

P203 Part Matrix

P203

		Version	
0		Normal	
H		High Pressure	
P		External Pressure Registration	
S		Throat Stabilizer	
		Port Size	
14		1.5 NPT	
15		1.5 x 2 NPT	
16		2 NPT	
		Spring Range	
04	use with G0 Monitor	2 - 4.5 "	O, P or S Version Only — Note: Monitor Range should be chosen prior to choosing Main Spring
06	use with G1 Monitor	3.5 - 6.5"	
09	use with G1 Monitor	5 - 9"	
18	use with G2, R0, R1, B0 Monitor	8.5 - 18"	
30	use with R2, B1, SO Monitor	14 - 30"	
02	use with B2, S1 Monitor	1 - 2 PSIG	H, P or S Version Only
03	use with S2, S3 Monitor	1.5 - 3.25 PSIG	
		Special Construction	
0		MPT	
		Orifice	
4		1/4"	
6		3/8"	
8		1/2"	
B		3/4"	
D		1"	
F		1-3/16"	
		Port Orientation	
1		Up (Standard)	
2		Down	
3		Right	
4		Left	
		Bonnet Vent Orientation	
C		12 O'Clock	
D		3 O'Clock (Standard)	
E		6 O'Clock	
F		9 O'Clock	
		Monitor Ranges	

	WC or PSIG	BAR	
G0	0-5" WC	0 - 11.20	use with 04 Main Spring
G1	4 - 9.5" WC	9.96 - 23.66	use with 06 or 09 Main Spring
G2	8-14" WC	19.92 - 34.87	use with 18 Main Spring
R0	8-12" WC	19.92 - 29.89	use with 18 Main Spring
R1	10 - 20" WC	24.90 - 49.81	use with 18 Main Spring
R2	14 - 28" WC	54.87 - 69.74	use with 30 Main Spring
B0	11 - 21" WC	27.39 - 52.30	use with 18 Main Spring
B1	18 - 33" WC	44.83 - 82.19	use with 30 Main Spring
S0	0.5 -1 PSIG	34.47 - 68.94	use with 30 Main Spring
B2	1.0 - 1.6 PSIG	68.94 - 110.31	use with 02 Main Spring
S1	0.75 - 1.6 PSIG	51.71 - 110.31	use with 02 Main Spring
S2	1.25 - 2.25 PSIG	86.18 - 15513	use with 03 Main Spring
S3	1.25 - 3.25 PSIG	86.18 - 224.07	use with 03 Main Spring

Note: Monitor Range should be chosen prior to choosing Main Spring

P203 Normal (0) Relief Capacities

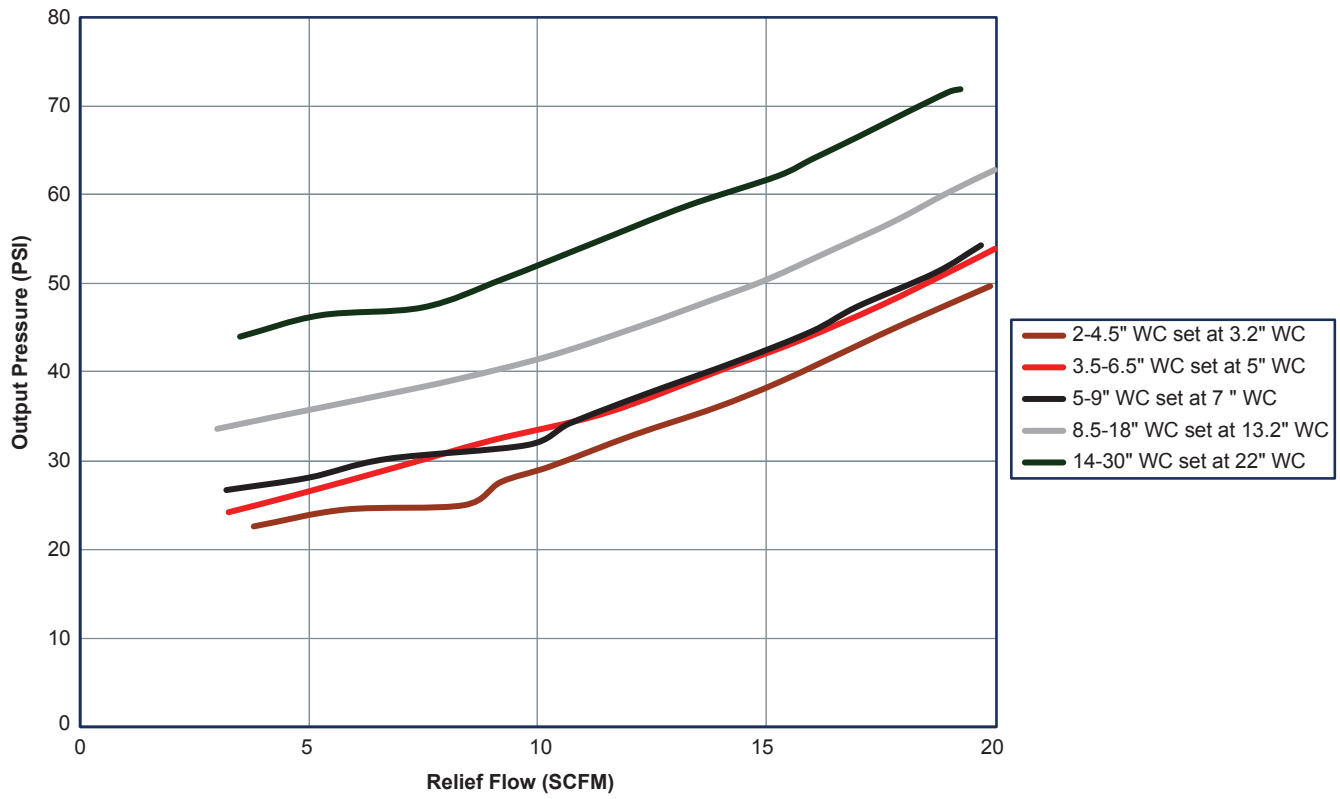

P203 High (H) Relief Capacities

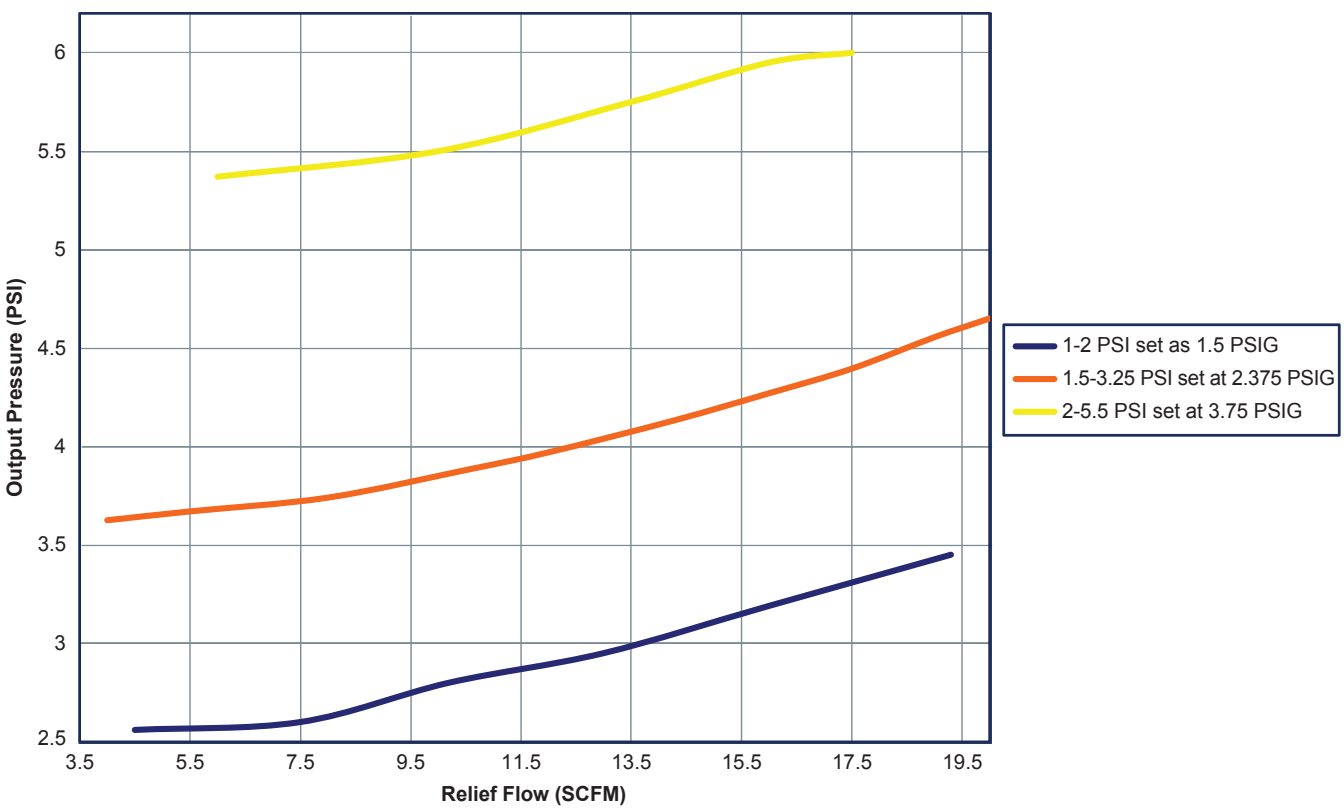

P203 Flow Capacities in SCFH (Nm³/h) of 0.6 Specific Gravity Natural Gas

Outlet Pressure, Spring Part Number, and Accuracy	Inlet Pressure		NPT 1-1/2 Body Size					
			Orifice Size, Inches (mm)					
	PSIG	BAR	1/4 (6.4)	3/8 (9.5)	1/2 (13)	3/4 (19)	1 (25)	1-3/16 (30)
4 inches w.c. (10 mbar)	0.4	0.028				1000 (26.8)	1400 (37.5)	1600 (42.8)
	0.5	0.034				1400 (37.5)	1600 (42.8)	1800 (48.2)
	1	0.07	400 (10.7)	800 (21.4)	1200 (32.2)	2100 (56.3)	2500 (67.0)	2700 (72.4)
655-697-002 or 655-697-003	1.5	0.10	500 (13.4)	1050 (28.1)	1600 (42.9)	2500 (67.0)	3000 (80.4)	3200 (85.8)
	2	0.14	600 (16.1)	1300 (34.8)	2100 (56.3)	2800 (75.0)	3500 (93.8)	3800 (102)
	5	0.34	1150 (30.8)	2200 (58.9)	3300 (88.4)	4500 (121)	5300 (142)	6000 (161)
1 inch w.c. (2 mbar) droop 2 inches w.c. (5 mbar) boost	13	0.90	1600 (42.8)	3600 (96.4)	6200 (166)	7000 (188)	6000 (161)	6850 (184)
	25	1.7	2550 (68.3)	5000 (134)	7350 (197)	8950 (240)	9000 (241)	
	60	4.1	4750 (127)	5100 (137)	7050 (189)	5600 (150)[1]		
	100	6.9	6650 (186)	7300 (196)	5200 (139)[1]			
	125	8.6	6950 ()	8300 (222)				
7 inches w.c. (17 mbar)	0.4	0.028				900 (24.1)	1300 (34.8)	1450 (38.9)
	0.5	0.034				1200 (32.2)	1550 (41.5)	1750 (46.9)
	1	0.07	400 (10.7)	800 (21.4)	1100 (29.5)	1900 (50.9)	2300 (61.6)	2500 (67.0)
655-697-004	1.5	0.10	500 (13.4)	1050 (28.1)	1500 (40.2)	2300 (61.6)	2800 (75.0)	1800 (48.2)
	2	0.14	600 (16.1)	1300 (34.8)	1900 (50.9)	2100 (56.3)	3300 (88.4)	1800 (48.2)
	5	0.34	950 (25.5)	2100 (56.3)	3200 (85.8)	3350 (89.8)	5100 (137)	4500 (121)
1 inch w.c. (2 mbar) droop 2 inches w.c. (5 mbar) boost	13	0.90	1600 (42.8)	2200 (58.9)	3300 (88.4)	5800 (155)	8000 (214)	8000 (214)
	25	1.7	2200 (58.9)	5200 (139)	6800 (182)	8400 (225)	8750 (235)	
	60	4.1	4300 (115)	9200 (247)	10100 (271)	9900 (265)		
	100	6.9	7500 (201)	10500 (281)	9200 (247)[1]			
	125	8.6	9050 (243)	9800 (263)[1]				
11 inches w.c. (17 mbar)	0.5	0.03				800 (21.4)	1500 (40.2)	1700 (45.6)
	1	0.07	400 (10.7)	700 (18.7)	1100 (29.5)	1800 (48.2)	2200 (58.9)	2450 (65.7)
	1.5	0.10	500 (13.4)	950 (25.5)	1450 (38.9)	2300 (61.6)	2800 (75.0)	2600 (69.7)
655-697-005	2	0.14	600 (16.1)	1200 (32.2)	1700 (45.6)	1950 (52.3)	3200 (85.8)	2750 (73.7)
	5	0.34	950 (25.5)	2000 (53.6)	2900 (77.7)	3800 (102)	5100 (137)	5150 (138)
	13	0.90	1600 (42.8)	3400 (91.1)	3700 (99.2)	6100 (163)	7250 (194)	7650 (205)
± 2 inches w.c. (5 mbar)	25	1.7	2100 (56.3)	5150 (138)	7100 (190)	7950 (213)	9400 (252)	
	60	4.1	4400 (118)	9250 (248)	9400 (252)	10400 (279)		
	100	6.9	7300 (196)	10000 (268)	10100 (271)			
	125	8.6	9050 (243)	10800 (289)				
14 inches w.c. (35 mbar)	1	0.07	450 (12.1)	800 (21.4)	1000 (26.8)	1250 (33.5)	1500 (40.2)	1950 (52.3)
	1.5	0.10	500 (13.4)	850 (22.8)	1050 (28.1)	1550 (41.5)	1650 (44.2)	2350 (62.9)
	2	0.14	550 (14.7)	1150 (30.8)	1400 (37.5)	1750 (46.9)	2300 (61.6)	2500 (67.0)
655-697-005	5	0.34	1000 (26.8)	1200 (32.2)	2050 (54.9)	3000 (80.4)	4300 (115)	4750 (127)
	13	0.90	1750 (46.9)	3050 (81.7)	4250 (114)	6100 (163)	7300 (196)	7850 (210)
± 2 inches w.c. (5 mbar)	25	1.7	2500 (67.0)	4750 (127)	5650 (151)	8700 (233)	8700 (233)	
	60	4.1	4750 (127)	9450 (253)	9950 (267)	10550 (283)		
	100	6.9	7450 (200)	10400 (279)	10600 (284)			
	125	8.6	9050 (243)	10450 (280)				
20 inches w.c. (50 mbar)	1	0.07	300 (8.04)	500 (13.4)	750 (20.1)	1000 (26.8)	1300 (34.8)	1700 (45.6)
	2	0.14	500 (13.4)	950 (25.5)	1400 (37.5)	2000 (53.6)	2800 (75.0)	3100 (83.1)
	5	0.34	900 (24.1)	1700 (45.6)	2500 (67.0)	4200 (113)	5000 (134)	5500 (147)
655-697-006	13	0.90	1500 (40.2)	3200 (85.8)	5400 (145)	6500 (174)	7000 (188)	7100 (190)
	25	1.7	2100 (56.3)	4700 (126)	7000 (188)	8250 (221)	9350 (251)	
± 3 inches w.c. (7 mbar)	60	4.1	4750 (127)	8900 (239)	9950 (267)	10600 (284)		
	100	6.9	7400 (198)	10500 (281)	10800 (289)			
	125	8.6	9200 (247)	10950 (293)				

1. Limited due to boost

- Shaded areas show where indicated droop would be exceeded regardless of capacity.
- Shaded areas show where maximum operating inlet pressure for a given port diameter is exceeded.

P203 Flow Capacities in SCFH (Nm³/h) of 0.6 Specific Gravity Natural Gas

BelGAS

Outlet Pressure, Spring Part Number, and Accuracy	Inlet Pressure		NPT 2 (DN 50) Body Size					
			Orifice Size, Inches (mm)					
	PSIG	BAR	1/4 (6.4)	3/8 (9.5)	1/2 (13)	3/4 (19)	1 (25)	1-3/16 (30)
4 inches w.c. (10 mbar) 655-697-002 or 655-697-003 1 inch w.c. (2 mbar) droop 2 inches w.c. (5 mbar) boost	0.4	0.028				1200 (32.3)	1600 (42.8)	1800 (48.2)
	0.5	0.034				1700 (45.6)	2200 (58.9)	2400 (64.3)
	1	0.07	400 (10.7)	900 (24.1)	1300 (34.8)	2800 (75.0)	3200 (85.8)	3800 (102)
	1.5	0.10	500 (13.4)	1100 (29.5)	1700 (45.5)	3600 (96.5)	4300 (115)	5000 (134)
	2	0.14	600 (16.1)	1400 (37.5)	2200 (58.9)	4500 (121)	5500 (147)	6400 (172)
	5	0.34	1000 (26.8)	2300 (61.6)	3700 (99.2)	7800 (209)	9500 (255)	12700 (340)
	13	0.90	1650 (44.2)	3700 (99.2)	6500 (174)	13000 (348)	14000 (375)	14500 (389)
	25	1.7	2500 (64.3)	5200 (139)	9200 (247)	13000 (348)	18000 (482)	
	60	4.1	4450 (119)	9000 (241)	14550 (390)	15000 (402)		
	100	6.9	5500 (147)	9500 (255)	12900 (346)[1]			
	125	8.6	7250 (194)	3900 (105)[1]				
7 inches w.c. (17 mbar) 655-697-004 1 inch w.c. (2 mbar) droop 2 inches w.c. (5 mbar) boost	0.4	0.028				950 (25.5)	1400 ()37.5	1600 (42.8)
	0.5	0.034				1500 (40.2)	1800 (48.2)	2000 (53.6)
	1	0.07	400 (10.7)	800 (21.4)	1200 (32.2)	2300 (61.6)	2800 (75.0)	3300 (88.4)
	1.5	0.10	500 (13.4)	1050 (28.1)	1600 (42.8)	3100 (83.1)	3600 (96.5)	4500 (121)
	2	0.14	600 (16.1)	1300 (34.8)	2000 (53.6)	4000 (107)	4500 (121)	6000 (161)
	5	0.34	1000 (26.8)	2100 (56.3)	3500 (93.8)	7700 (206)	9400 (252)	9400 (252)
	13	0.90	1650 (44.2)	3500 (93.8)	6400 (172)	10000 (268)	20200 (541)	21200 (568)
	25	1.7	2400 (64.3)	5200 (139)	10300 (276)	20000 (536)	11800 (316)[1]	
	60	4.1	4450 (119)	9000 (241)	12000 (322)	20700 (555)		
	100	6.9	7500 (201)	10000 (268)	13100 (351)			
	125	8.6	9500 (255)	10300 (276)				
11 inches w.c. (17 mbar) 655-697-005 ± 2 inches w.c. (5 mbar)	0.5	0.03				800 (21.4)	1500 (40.2)	1600 (42.8)
	1	0.07	400 (10.7)	750 (20.1)	1100 (29.5)	1800 (48.2)	2500 (64.0)	2600 (69.7)
	1.5	0.10	500 (13.4)	1000 (26.8)	1450 (38.9)	2500 (67.0)	3400 (91.1)	3350 (89.8)
	2	0.14	600 (16.1)	1200 (32.2)	1700 (45.6)	3100 (83.1)	3600 (113)	3750 (101)
	5	0.34	1000 (26.8)	2000 (53.6)	3000 (80.4)	7300 (196)	7000 (188)	8500 (228)
	13	0.90	1600 (42.9)	3400 (91.1)	6200 (166)	10350 (277)	17650 (473)	18100 (485)
	25	1.7	2400 (64.3)	5650 (151)	10350 (277)	19300 (517)	23450 (628)	
	60	4.1	4450 (119)	11350 (304)	19300 (517)	20200 (541)		
	100	6.9	7450 (200)	16650 (446)	20200 (541)			
	125	8.6	9500 (255)	17500 (469)				
14 inches w.c. (35 mbar) 655-697-005 ± 2 inches w.c. (5 mbar)	1	0.07	450 (12.1)	700 (18.8)	1100 (29.5)	1500 (40.2)	1700 (45.6)	2700 (72.4)
	1.5	0.10	550 (14.7)	850 (22.8)	1200 (32.3)	1900 (50.9)	2700 (72.4)	3600 (96.5)
	2	0.14	600 (16.1)	1000 (26.8)	1900 (50.9)	2800 (75.0)	3800 (102)	3800 (102)
	5	0.34	1050 (28.1)	1750 (46.9)	2800 (75.0)	4000 (107)	5300 (142)	10600 (284)
	13	0.90	1750 (46.9)	3700 (99.2)	5700 (153)	14400 (386)	18000 (482)	18500 (496)
	25	1.7	2600 (69.7)	5700 (153)	10200 (273)	18000 (482)	25400 (681)	
	60	4.1	4800 (129)	10900 (292)	11000 (295)	19600 (525)		
	100	6.9	7400 (198)	16500 (442)	14100 (378)			
	125	8.6	9100 (244)	18000 (482)				
20 inches w.c. (50 mbar) 655-697-006 ± 3 inches w.c. (7 mbar)	1	0.07	300 (8.04)	750 (20.1)	550 (14.7)	1250 (33.5)	1700 (45.6)	1800 (48.2)
	2	0.14	500 (13.4)	1150 (30.8)	1700 (45.6)	1900 (50.9)	2350 (62.9)	3250 (87.1)
	5	0.34	900 (24.1)	1650 (44.2)	2150 (57.6)	3250 (87.1)	6400 (172)	6700 (180)
	13	0.90	1500 (40.2)	2550 (68.3)	4350 (117)	5950 (159)	10150 (272)	10500 (281)
	25	1.7	2450 (65.7)	4850 (130)	7200 (193)	18100 (485)	19200 (515)	
	60	4.1	4900 (131)	9400 (252)	19600 (525)	22700 (608)		
	100	6.9	7500 (201)	17400 (466)	13800 (370)			
	125	8.6	9150 (245)	5500 (147)[1]				

P203 Flow Capacities in SCFH (Nm³/h) of 0.6 Specific Gravity Natural Gas

Outlet Pressure, Spring Part Number, and Accuracy	Inlet Pressure		NPT 1-1/2 Body Size					
			Orifice Size, Inches (mm)					
	PSIG	BAR	1/4 (6.4)	3/8 (9.5)	1/2 (13)	3/4 (19)	1 (25)	1-3/16 (30)
1 PSIG (0.07 BAR) 655-697-006 ±0.2 PSIG (0.014 BAR)	2	0.14	700 (18.8)	1250 (33.5)	1550 (41.5)	2900 (77.7)	3050 (81.7)	3250 (87.1)
	5	0.34	1050 (28.1)	2150 (57.6)	2800 (75.0)	4800 (129)	5600 (150)	6300 (169)
	10	0.69	1650 (44.2)	3200 (85.8)	4400 (118)	6550 (176)	7800 (209)	8150 (218)
	15	1.0	2000 (53.6)	4100 (110)	5750 (154)	8000 (214)	9400 (252)	10250 (275)
	20	1.4	2300 (61.6)	4750 (127)	6100 (163)	8700 (233)	10950 (293)	
	25	1.7	2600 (69.7)	5500 (147)	8200 (220)	9950 (267)	11550 (310)	
	30	2.1	2900 (77.7)	6250 (168)	8350 (224)	10800 (289)	12250 (328)	
	40	2.8	3600 (96.5)	7500 (201)	9350 (251)	10850 (291)		
	45	3.1	3900 (105)	8400 (225)	10350 (277)	11000 (295)		
	50	3.5	4250 (114)	8900 (239)	10950 (293)	11050 (296)		
	60	4.1	4950 (133)	10000 (268)	11000 (295)	11400 (306)		
	80	5.5	6150 (165)	11150 (299)	11350 (304)			
	100	6.9	7500 (201)	12000 (322)	12000 (322)			
	125	8.6	9150 (245)	12000 (322)				
1 PSIG (0.07 BAR) 655-697-006 ± 1% ABS ±0.16 psia (0.011 BAR)	2	0.14	650 (17.4)	1050 (28.1)	1350 (36.2)	2450 (65.7)	2700 (72.4)	3000 (80.4)
	5	0.34	1050 (28.1)	2100 (56.3)	2700 (72.4)	3800 (102)	4700 (126)	5200 (139)
	10	0.69	1500 (40.2)	2800 (75.0)	3700 (99.2)	5600 (150)	7000 (188)	7300 (196)
	15	1.0	1950 (52.3)	3750 (101)	4900 (131)	6900 (185)	8500 (228)	8750 (235)
	20	1.4	2200 (58.9)	4600 (123)	5800 (155)	8150 (218)	10350 (277)	
	25	1.7	2500 (67.0)	5000 (134)	7250 (194)	9050 (243)	10850 (291)	
	30	2.1	2800 (75.0)	6000 (161)	8200 (220)	9400 (252)	11000 (295)	
	40	2.8	3550 (95.1)	7350 (197)	9100 (244)	9500 (255)		
	45	3.1	3900 (105)	8250 (221)	9650 (259)	10100 (271)		
	50	3.5	4050 (109)	8450 (226)	10300 (276)	10300 (276)		
	60	4.1	4800 (129)	9050 (243)	10450 (280)	10550 (283)		
	80	5.5	5900 (158)	11000 (295)	11100 (297)			
	10	6.9	7400 (198)	11150 (299)	11500 (299)			
	125	8.6	9000 (241)	11750 (315)				
1 PSIG (0.07 BAR) 655-697-006 ± 2% ABS ±0.31 psia (0.021 BAR)	2	0.14	750 (20.1)	1450 (38.9)	2100 (56.3)	3700 (99.2)	4650 (125)	5350 (143)
	5	0.34	1250 (33.5)	2500 (67.0)	3550 (95.1)	6050 (162)	7900 (212)	7900 (212)
	10	0.69	1750 (46.9)	3450 (92.5)	5100 (137)	8550 (229)	9550 (256)	10100 (271)
	15	1.0	2050 (54.9)	4350 (117)	6700 (180)	9400 (252)	11250 (302)	11400 (306)
	20	1.4	2500 (67.0)	5150 (138)	8100 (217)	10500 (281)	12200 (327)	
	25	1.7	2700 (72.4)	5800 (155)	10100 (271)	11550 (310)	12600 (338)	
	30	2.1	3050 (81.7)	6650 (178)	10550 (283)	12350 (331)	13100 (351)	
	40	2.8	3700 (99.2)	7950 (212)	10550 (283)	12350 (331)		
	45	3.1	4100 (110)	8800 (236)	11800 (316)	12700 (340)		
	50	3.5	4550 (122)	9250 (248)	12000 (322)	13000 (348)		
	60	4.1	5000 (134)	10900 (292)	12600 (338)	13000 (348)		
	80	5.5	6450 (173)	12550 (336)	13000 (348)			
	10	6.9	7950 (213)	12900 (346)	13450 (360)			
	125	8.6	9450 (253)	13450 (360)				
1 PSIG (0.07 BAR) 655-697-006 ±0.2 PSIG (0.014 BAR)	2	0.14	500 (13.4)	750 (20.1)	1750 (46.9)	2250 (60.3)	2400 (64.3)	2850 (76.4)
	5	0.34	1100 (29.5)	1800 (48.2)	2300 (61.6)	3400 (91.1)	4850 (130)	5350 (143)
	10	0.69	1600 (42.9)	3200 (85.8)	4600 (123)	7250 (194)	8800 (236)	8800 (236)
	30	2.1	2800 (75.0)	6300 (169)	7800 (209)	10400 (279)	11250 (302)	
	60	4.1	4900 (131)	9600 (257)	9650 (259)	11000 (295)		
	100	6.9	7300 (196)	11200 (300)	11950 (320)			
	125	8.6	9100 (244)	10550 (283)[1]				

1. Limited due to boost

- Shaded areas show where maximum operating inlet pressure for a given port diameter is exceeded.

P203 Flow Capacities in SCFH (Nm³/h) of 0.6 Specific Gravity Natural Gas

BelGAS

Outlet Pressure, Spring Part Number, and Accuracy	Inlet Pressure		NPT 2 (DN 50) Body Size					
			Orifice Size, Inches (mm)					
	PSIG	BAR	1/4 (6.4)	3/8 (9.5)	1/2 (13)	3/4 (19)	1 (25)	1-3/16 (30)
1 PSIG (0.07 BAR) 655-697-006 ±0.2 PSIG (0.014 BAR)	2	0.14	650 (17.4)	1200 (32.2)	2200 (58.9)	3200 (85.8)	3600 (96.5)	4500 (121)
	5	0.34	1100 (25.5)	2300 (61.6)	3200 (85.8)	4800 (129)	7700 (206)	10000 (268)
	10	0.69	1600 (42.9)	3000 (80.4)	4300 (115)	11400 (306)	15200 (407)	16300 (437)
	15	1.0	1900 (50.9)	4000 (107)	6900 (185)	15600 (418)	20800 (557)	22300 (598)
	20	1.4	2300 (61.6)	4900 (131)	9100 (244)	19000 (509)	24000 (643)	
	25	1.7	2600 (69.7)	5600 (150)	10500 (281)	21700 (582)	27400 (734)	
	30	2.1	2900 (77.7)	6500 (174)	11800 (316)	25300 (678)	32800 (879)	
	40	2.8	3700 (99.2)	8000 (214)	14500 (389)	27000 (724)		
	45	3.1	4000 (107)	8800 (236)	15800 (423)	27000 (724)		
	50	3.5	4300 (115)	9300 (249)	16600 (445)	28000 (750)		
	60	4.1	4900 (131)	11300 (303)	19500 (523)	31600 (847)		
	80	5.5	6300 (169)	14200 (381)	24000 (643)			
	100	6.9	7700 (206)	16700 (448)	29500 (791)			
	125	8.6	9600 (257)	20200 (541)				
1 PSIG (0.07 BAR) 655-697-006 ± 1% ABS ±0.16 psia (0.011 BAR)	2	0.14	570 (15.3)	1100 (29.5)	2000 (53.6)	2750 (73.7)	3100 (83.1)	4000 (107)
	5	0.34	1050 (28.1)	2200 (58.9)	2750 (73.7)	4100 (110)	6250 (168)	9000 (241)
	10	0.69	1500 (40.2)	2500 (67.0)	4050 (109)	8500 (228)	13250 (355)	13700 (367)
	15	1.0	1900 (50.9)	3450 (92.5)	5800 (155)	15500 (415)	16000 (429)	16300 (437)
	20	1.4	2300 (61.6)	4800 (129)	7700 (206)	18300 (490)	20850 (559)	
	25	1.7	2500 (67.0)	5600 (150)	10400 (279)	21500 (576)	22800 (611)	
	30	2.1	2900 (77.7)	6350 (170)	11950 (320)	23800 (638)	24300 (651)	
	40	2.8	3650 (97.8)	7850 (210)	14550 (390)	24300 (651)		
	45	3.1	3850 (103)	8400 (225)	15600 (418)	25400 (681)		
	50	3.5	4250 (114)	9350 (251)	16700 (448)	26000 ()697		
	60	4.1	4900 (131)	11200 (300)	19400 (520)	32000 (858)		
	80	5.5	6200 (166)	14250 (382)	24600 (659)			
	10	6.9	7400 (198)	16750 (449)	29000 (777)			
	125	8.6	9350 (251)	20200 (541)				
1 PSIG (0.07 BAR) 655-697-006 ± 2% ABS ±0.31 psia (0.021 BAR)	2	0.14	700 (18.8)	1450 (38.9)	2450 (65.7)	4100 (110)	5600 (150)	7900 (212)
	5	0.34	1150 (30.8)	2550 (68.3)	4000 (107)	8000 (214)	11700 (314)	14300 (383)
	10	0.69	1800 (48.2)	3550 (95.1)	6200 (166)	12300 (330)	18400 (493)	20000 (536)
	15	1.0	2050 (54.9)	4450 (119)	7850 (210)	15900 (426)	22000 (590)	24600 (659)
	20	1.4	2400 (64.3)	5250 (141)	9100 (244)	19200 (515)	25800 (691)	
	25	1.7	2750 (73.7)	5900 (158)	10300 (276)	21800 (584)	31200 (836)	
	30	2.1	3150 (84.4)	6550 (176)	11800 (316)	26200 (702)	35000 (938)	
	40	2.8	3750 (101)	8200 (220)	14300 (383)	30500 (817)		
	45	3.1	4050 (109)	8800 (236)	15600 (418)	28100 (753)		
	50	3.5	4400 (118)	9300 (249)	16700 (448)	33900 (909)		
	60	4.1	5050 (135)	10850 (291)	19500 (523)	34200 (917)		
	80	5.5	6350 (170)	13600 (364)	24600 (659)			
	10	6.9	7850 (210)	17000 (456)	30200 (809)			
	125	8.6	9400 (252)	20500 (549)				
1 PSIG (0.07 BAR) 655-697-006 ±0.2 PSIG (0.014 BAR)	2	0.14	500 (13.4)	1050 (28.1)	1400 (37.5)	2200 (58.9)	2900 (77.7)	3700 (99.2)
	5	0.34	1100 (29.5)	2000 (53.6)	2200 (58.9)	4500 (121)	6600 (177)	7000 (188)
	10	0.69	1600 (42.9)	3500 (93.8)	5700 (153)	9700 (260)	13000 (348)	13300 (356)
	30	2.1	2800 (75.0)	6200 (166)	11700 (314)	20000 (536)	23000 (616)	
	60	4.1	4900 (131)	10900 (292)	19300 (517)	20600 (552)		
	100	6.9	7500 (201)	17300 (464)	23900 (641)			
	125	8.6	9000 (241)	19900 (533)				

1. Limited due to boost

- Shaded areas show where maximum operating inlet pressure for a given port diameter is exceeded.

P203 H Flow Capacities in SCFH (Nm³/h) of 0.6 Specific Gravity Natural Gas

Outlet Pressure, Spring Part Number, and Accuracy	Inlet Pressure		NPT 1-1/2 Body Size					
			Orifice Size, Inches (mm)					
	PSIG	BAR	1/4 (6.4)	3/8 (9.5)	1/2 (13)	3/4 (19)	1 (25)	1-3/16 (30)
2 PSIG (0.14 BAR) 655-697-007 ±0.2 PSIG (0.014 BAR)	5	0.34	850 (22.8)	1600 (42.9)	1650 (44.2)	2400 (64.3)	2450 (65.7)	3900 (105)
	10	0.69	1450 (38.9)	2050 (54.9)	3250 (87.1)	5400 (145)	5750 (154)	6650 (178)
	15	1.0	1650 (44.2)	3000 (80.4)	4300 (115)	7000 (188)	8200 (220)	8200 (220)
	20	1.4	2050 (54.9)	3850 (103)	5650 (151)	7500 (201)	9050 (243)	
	25	1.7	2500 (67.0)	4600 (123)	6500 (174)	9600 (257)	9700 (260)	
	30	2.1	2750 (73.7)	5650 (151)	6500 (174)	9600 (257)	10850 (291)	
	40	2.8	3500 (93.8)	7000 (188)	8400 (225)	10150 (272)		
	45	3.1	3750 (101)	7800 (209)	9150 (245)	10500 (281)		
	50	3.5	4250 (114)	8500 (228)	9600 (257)	10500 (281)		
	60	4.1	4850 (130)	8800 (236)	9700 (260)	11400 (306)		
	80	5.5	6150 (165)	10000 (268)	11250 (302)			
	100	6.9	7600 (204)	10800 (289)	11250 (302)			
	125	8.6	9300 (249)	12200 (327)				
2 PSIG (0.14 BAR) 655-697-007 ± 1% ABS ±0.04 psia (0.028 BAR)	5	0.34	1100 (29.5)	2200 (58.9)	2800 (75.0)	4550 (122)	5600 (150)	6550 (176)
	10	0.69	1750 (46.9)	3150 (84.4)	4600 (123)	7550 (202)	9050 (243)	10150 (272)
	15	1.0	2000 (53.6)	4200 (113)	6400 (172)	10050 (269)	11000 (295)	11200 (300)
	20	1.4	2400 (64.3)	5000 (134)	7550 (202)	11700 (314)	12200 (327)	
	25	1.7	2700 (72.4)	5750 (154)	9600 (257)	11900 (319)	12950 (347)	
	30	2.1	3100 (83.1)	6700 (180)	9600 (257)	11900 (319)	13300 (356)	
	40	2.8	3750 (101)	7950 (213)	10750 (288)	13000 (348)		
	45	3.1	4100 (110)	8750 (235)	10750 (288)	13000 (348)		
	50	3.5	4550 (122)	9550 (256)	12700 (340)	13000 (348)		
	60	4.1	5150 (138)	11250 (302)	13300 (356)	14400 (386)		
	80	5.5	6450 (173)	12750 (342)	13300 (356)			
	100	6.9	7750 (208)	14450 (387)	13300 (356)			
	125	8.6	9400 (252)	14600 (391)				
2 PSIG (0.14 BAR) 655-697-007 ± 1% ABS ±0.17 psia (0.012 BAR)	5	0.34	850 (22.8)	1400 (37.5)	1450 (38.9)	2250 (60.3)	2450 (65.7)	3300 (88.4)
	10	0.69	1400 (37.5)	1650 (44.2)	2550 (68.3)	4350 (117)	5250 (141)	5600 (150)
	15	1.0	1500 (40.2)	2700 (72.4)	3800 (102)	6000 (161)	5400 (145)	8000 (214)
	20	1.4	2000 (53.6)	3600 (96.5)	5200 (139)	7200 (193)	8200 (220)	
	25	1.7	2400 (64.3)	4500 (121)	6400 (172)	9000 (241)	9550 (256)	
	30	2.1	2800 (75.0)	5600 (150)	7500 (201)	10000 (268)	10400 (279)	
	40	2.8	3600 (96.5)	7800 (209)	9200 (247)	10150 (272)		
	45	3.1	3900 (105)	8400 (225)	9800 (263)	10900 (292)		
	50	3.5	4300 (115)	9100 (244)	10300 (276)	10600 (284)		
	60	4.1	5000 (134)	10200 (273)	11400 (306)	11300 (303)		
	80	5.5	6400 (172)	12000 (322)	10300 (276)(1)			
	100	6.9	7900 (212)	13000 (348)	11150 (299)(1)			
	125	8.6	9600 (257)	11950 (320)(1)				
2 PSIG (0.14 BAR) 655-697-007 ± 2% ABS ±0.33 psia (0.023 BAR)	5	0.34	1050 (28.1)	2100 (56.3)	2500 (67.0)	4100 (110)	5200 (139)	6250 (168)
	10	0.69	1650 (44.2)	3050 (81.7)	4200 (113)	6400 (172)	8350 (224)	8850 (237)
	15	1.0	1900 (50.9)	4200 (113)	6200 (166)	8800 (236)	10500 (281)	10750 (288)
	20	1.4	2200 (58.9)	5100 (137)	7600 (204)	10300 (276)	12000 (322)	
	25	1.7	2500 (67.0)	5800 (155)	8700 (233)	11800 (316)	12050 (323)	
	30	2.1	3000 (80.4)	6500 (174)	9600 (257)	12600 (338)	12700 (340)	
	40	2.8	3600 (96.5)	8100 (217)	11500 (308)	12700 (340)		
	45	3.1	3900 (105)	8800 (236)	12000 (322)	12800 (343)		
	50	3.5	4300 (115)	9700 (260)	12600 (338)	12900 (346)		
	60	4.1	5000 (134)	11300 (303)	13600 (364)	13700 (367)		
	80	5.5	6400 (172)	14200 (381)	12650 (339)			
	100	6.9	7900 (212)	15500 (415)	12950 (347)			
	125	8.6	9600 (257)	14200 (381)(1)				

1. Limited due to boost

- Shaded areas show where maximum operating inlet pressure for a given port diameter is exceeded.

P203 H Flow Capacities in SCFH (Nm³/h) of 0.6 Specific Gravity Natural Gas

Outlet Pressure, Spring Part Number, and Accuracy	Inlet Pressure		NPT 2 (DN 50) Body Size					
			Orifice Size, Inches (mm)					
	PSIG	BAR	1/4 (6.4)	3/8 (9.5)	1/2 (13)	3/4 (19)	1 (25)	1-3/16 (30)
2 PSIG (0.14 BAR) 655-697-007 ±0.2 PSIG (0.014 BAR)	5	0.34	850 (22.8)	1800 (48.2)	1800 (48.2)	2950 (79.1)	4250 (114)	5200 (139)
	10	0.69	1350 (36.2)	1900 (50.9)	3000 (80.4)	5200 (139)	6600 (177)	7800 (209)
	15	1.0	1700 (45.6)	2800 (75.0)	3700 (99.2)	6900 (185)	7200 (193)	9500 (255)
	20	1.4	2000 (53.6)	3800 (102)	5300 (142)	9000 (241)	9800 (263)	
	25	1.7	2450 (65.7)	4500 (121)	6800 (182)	12500 (335)	14200 (381)	
	30	2.1	2650 (71.0)	5200 (139)	7500 (201)	16000 (429)	16100 (431)	
	40	2.8	3400 (91.1)	7400 (198)	13200 (354)	21600 (579)		
	45	3.1	3600 (96.1)	8000 (214)	15500 (415)	21600 (579)		
	50	3.5	4000 (107)	8500 (228)	16700 (448)	21900 (587)		
	60	4.1	4600 (123)	10700 (287)	19200 (515)	18800 (504)[1]		
	80	5.5	5800 (155)	13100 (351)	24800 (665)			
	100	6.9	7100 (190)	16200 (434)	25600 (686)			
	125	8.6	9000 (241)	19900 (533)				
2 PSIG (0.14 BAR) 655-697-007 ±0.4 PSIG (0.028 BAR)	5	0.34	1100 (29.5)	2250 (60.3)	3200 (85.8)	5500 (147)	7800 (209)	10100 (271)
	10	0.69	1600 (42.9)	3250 (87.1)	5400 (145)	10000 (268)	14100 (378)	15100 (405)
	15	1.0	2000 (53.6)	4150 (111)	7200 (193)	14400 (386)	18600 (498)	22100 (592)
	20	1.4	2300 (61.6)	4950 (133)	9000 (241)	17500 (469)	24000 (643)	
	25	1.7	2650 (71.0)	5800 (155)	10200 (273)	20700 (555)	28000 (750)	
	30	2.1	3100 (83.1)	6600 (177)	11800 (316)	24900 (667)	28500 (764)	
	40	2.8	3600 (96.5)	8100 (217)	14600 (391)	28000 (750)		
	45	3.1	4100 (110)	8850 (237)	15800 (423)	29000 (777)		
	50	3.5	4400 (118)	9850 (264)	17200 (461)	29200 (783)		
	60	4.1	4900 (131)	11300 (303)	19500 (523)	29300 (785)		
	80	5.5	6400 (172)	14300 (383)	24500 (657)			
	100	6.9	7600 (204)	17200 (461)	29700 (796)			
	125	8.6	9400 (252)	20500 (549)				
2 PSIG (0.14 BAR) 655-697-007 ± 1% ABS ±0.17 psia (0.012 BAR)	5	0.34	750 (20.1)	1600 (42.9)	1600 (42.9)	2400 (64.3)	3000 (80.4)	4100 (110)
	10	0.69	1250 (33.5)	1600 (42.9)	2550 (68.3)	4250 (114)	5000 (134)	6100 (163)
	15	1.0	1600 (42.9)	2700 (72.4)	3800 (102)	5200 (139)	6900 (185)	7600 (204)
	20	1.4	2000 (53.6)	3600 (96.5)	5200 (139)	6900 (185)	9400 (252)	
	25	1.7	2450 (65.7)	4400 (118)	7500 (201)	9600 (257)	10650 (285)	
	30	2.1	2800 (75.0)	5200 (139)	8600 (230)	11800 (316)	16100 (431)	
	40	2.8	3700 (99.2)	7500 (201)	12200 (327)	16200 (434)		
	45	3.1	4100 (110)	8400 (225)	15200 (407)	18350 (492)		
	50	3.5	4400 (118)	9000 (241)	16900 (453)	21000 (563)		
	60	4.1	5100 (137)	11000 (295)	20800 (557)	21000 (563)		
	80	5.5	6500 (174)	14600 (391)	24800 (665)			
	100	6.9	8000 (214)	18000 (482)	29300 (785)			
	125	8.6	9800 (263)	20500 (549)				
2 PSIG (0.14 BAR) 655-697-007 ± 2% ABS ±0.33 psia (0.023 BAR)	5	0.34	1000 (26.8)	2150 (57.6)	2750 (73.7)	5000 (134)	6200 (166)	7900 (212)
	10	0.69	1550 (41.5)	3050 (81.7)	5000 (134)	8600 (230)	12750 (342)	13800 (370)
	15	1.0	1900 (50.9)	4200 (113)	7200 (193)	11000 (295)	11750 (315)	21700 (582)
	20	1.4	2300 (61.6)	5100 (137)	9200 (247)	14200 (381)	16000 (429)	
	25	1.7	2600 (69.7)	5900 (158)	10700 (287)	16400 (440)	25400 (681)	
	30	2.1	3000 (80.4)	6600 (177)	12100 (324)	19700 (528)	27900 (748)	
	40	2.8	3700 (99.2)	8200 (220)	12200 (327)	27200 (729)		
	45	3.1	4100 (110)	9000 (241)	15200 (407)	27200 (729)		
	50	3.5	4400 (118)	9700 (260)	16900 (453)	27400 (734)		
	60	4.1	5100 (137)	11300 (303)	20800 (557)	27400 (734)		
	80	5.5	6500 (174)	14600 (391)	24500 (657)			
	100	6.9	8000 (214)	18000 (482)	29600 (793)			
	125	8.6	9800 (263)	20500 (549)				

1. Limited due to boost

- Shaded areas show where maximum operating inlet pressure for a given port diameter is exceeded.

P203 H Flow Capacities in SCFH (Nm³/h) of 0.6 Specific Gravity Natural Gas

Outlet Pressure, Spring Part Number, and Accuracy	Inlet Pressure		NPT 1-1/2 Body Size					
			Orifice Size, Inches (mm)					
	PSIG	BAR	1/4 (6.4)	3/8 (9.5)	1/2 (13)	3/4 (19)	1 (25)	1-3/16 (30)
3 PSIG (0.21 BAR) 655-697-008 ±0.3 PSIG (0.021 BAR)	5	0.34	800 (21.4)	1350 (36.2)	1650 (44.2)	2500 (67.0)	2500 (67.0)	3850 (103)
	10	0.69	1200 (32.2)	1800 (48.2)	2650 (71.0)	4600 (123)	6050 (162)	6600 (177)
	15	1.0	1650 (44.2)	2300 (61.6)	3750 (101)	5600 (174)	9200 (247)	8200 (220)
	20	1.4	1950 (52.3)	3500 (93.8)	5000 (134)	8350 (224)	9200 (247)	
	25	1.7	2150 (57.6)	4400 (118)	6500 (174)	8150 (218)	10050 (269)	
	30	2.1	2700 (72.4)	5600 (150)	6700 (180)	10050 (269)	11250 (302)	
	40	2.8	3300 (88.4)	6900 (185)	7900 (212)	10300 (275)		
	45	3.1	3550 (95.1)	7000 (188)	8650 (232)	11000 (295)		
	50	3.5	4050 (109)	7800 (209)	9700 (260)	11000 (295)		
	60	4.1	4250 (114)	8200 (220)	9900 (265)	11450 (307)		
	80	5.5	5950 (159)	10000 (268)	11600 (311)			
	100	6.9	7450 (200)	11750 (315)	11900 (319)			
	125	8.6	8800 (236)	12200 (327)				
3 PSIG (0.21 BAR) 655-697-008 ±0.6 PSIG (0.041 BAR)	5	0.34	1100 (29.5)	1950 (52.3)	2800 (75.0)	4250 (114)	5400 (145)	7200 (193)
	10	0.69	1650 (44.2)	3100 (83.1)	4650 (125)	7750 (208)	8700 (233)	9100 (244)
	15	1.0	2050 (54.9)	4100 (110)	5950 (159)	9550 (256)	11150 (299)	11800 (316)
	20	1.4	2400 (64.3)	4900 (131)	7800 (209)	10650 (285)	12350 (331)	
	25	1.7	2600 (69.7)	5750 (154)	8700 (233)	11950 (320)	14050 (377)	
	30	2.1	3100 (83.1)	6550 (176)	10250 (275)	12050 (323)	14400 (386)	
	40	2.8	3150 (84.4)	7850 (210)	11300 (303)	13800 (370)		
	45	3.1	4150 (111)	8400 (225)	12450 (334)	14150 (379)		
	50	3.5	4400 (118)	9300 (249)	12450 (334)	14150 (379)		
	60	4.1	5000 (134)	10700 (287)	13000 (348)	15350 (411)		
	80	5.5	6400 (172)	13050 (350)	16000 (429)			
	100	6.9	7650 (205)	15400 (413)	16050 (430)			
	125	8.6	9200 (247)	16050 (430)				
3 PSIG (0.21 BAR) 655-697-008 ± 1% ABS ±0.18 psia (0.012 BAR)	5	0.34	500 (13.4)	1150 (30.8)	1200 (32.2)	1450 (38.9)	1550 (41.5)	2100 (56.3)
	10	0.69	900 (24.1)	1350 (36.2)	1500 (40.2)	2750 (73.7)	3200 (85.8)	3400 (91.1)
	15	1.0	1200 (32.2)	1700 (45.6)	2200 (58.9)	3900 (105)	4900 (131)	4950 (133)
	20	1.4	1500 (40.2)	2100 (56.3)	2900 (77.7)	5300 (142)	8000 (214)	
	25	1.7	1900 (50.9)	2600 (69.7)	4300 (115)	7400 (198)	9350 (251)	
	30	2.1	2200 (58.9)	3100 (83.1)	5100 (137)	8400 (225)	8650 (232)[1]	
	40	2.8	2900 (77.7)	4800 (129)	8000 (214)	8750 (235)		
	45	3.1	3300 (88.4)	5800 (155)	9300 (249)	9900 (265)		
	50	3.5	3700 (99.2)	6800 (182)	10200 (273)	10600 (284)		
	60	4.1	4400 (118)	8400 (225)	11600 (311)	10700 (287)		
	80	5.5	6300 (169)	10800 (289)	9400 (252)[1]			
	100	6.9	8100 (217)	12100 (324)	11750 (315)			
	125	8.6	10000 (268)	10750 (288)[1]				
3 PSIG (0.21 BAR) 655-697-008 ± 2% ABS ±0.35 psia (0.024 BAR)	5	0.34	900 (24.1)	1450 (38.9)	1800 (48.2)	3000 (80.4)	3000 (80.4)	4650 (125)
	10	0.69	1250 (33.5)	2050 (54.9)	3150 (84.4)	5150 (138)	6450 (173)	6650 (178)
	15	1.0	1800 (48.2)	3100 (83.1)	4400 (118)	7200 (193)	8700 (233)	8700 (233)
	20	1.4	2200 (58.9)	3800 (102)	6100 (163)	8600 (230)	11000 (295)	
	25	1.7	2600 (69.7)	5000 (134)	7600 (204)	9700 (260)	11050 (296)	
	30	2.1	2900 (77.7)	5800 (155)	8700 (233)	11200 (300)	11450 (3070)	
	40	2.8	3600 (96.5)	7800 (209)	10800 (289)	11600 (311)		
	45	3.1	4000 (107)	8400 (225)	11600 (311)	11600 (311)		
	50	3.5	4600 (123)	9400 (252)	12400 (332)	11750 (315)		
	60	4.1	5100 (137)	10600 (284)	13800 (370)	13250 (355)		
	80	5.5	6500 (174)	12700 (340)	12600 (338)[1]			
	100	6.9	8100 (217)	14400 (386)	12550 (336)[1]			
	125	8.6	10000 (268)	12500 (335)[1]				

1. Limited due to boost

- Shaded areas show where maximum operating inlet pressure for a given port diameter is exceeded.

P203 H Flow Capacities in SCFH (Nm³/h) of 0.6 Specific Gravity Natural Gas

Outlet Pressure, Spring Part Number, and Accuracy	Inlet Pressure		NPT 2 (DN 50) Body Size					
			Orifice Size, Inches (mm)					
	PSIG	BAR	1/4 (6.4)	3/8 (9.5)	1/2 (13)	3/4 (19)	1 (25)	1-3/16 (30)
3 PSIG (0.21 BAR) 655-697-008 ±0.3 PSIG (0.021 BAR)	5	0.34	750 (20.1)	1400 (37.5)	1600 (42.9)	2400 (64.3)	2900 (77.7)	3500 (93.8)
	10	0.69	1200 (32.2)	1900 (50.9)	2750 (73.7)	5000 (134)	6400 (171)	6900 (185)
	15	1.0	1400 (37.5)	2000 (53.6)	3100 (83.1)	5900 (158)	7700 (206)	9800 (263)
	20	1.4	1850 (49.6)	3000 (80.4)	4150 (111)	7700 (206)	7900 (212)	
	25	1.7	2050 (54.9)	3900 (105)	5000 (134)	9100 (244)	9750 (261)	
	30	2.1	2550 (68.3)	4800 (129)	6700 (180)	10100 (271)	17200 (461)	
	40	2.8	3150 (84.4)	6250 (168)	8700 (233)	11600 (311)		
	45	3.1	3400 (91.1)	6750 (181)	9900 (265)	14500 (389)		
	50	3.5	3900 (105)	6750 (181)	12300 (330)	13900 (373)		
	60	4.1	4350 (117)	9400 (252)	12700 (340)	18300 (490)		
	80	5.5	5600 (150)	12700 (340)	18800 (504)			
	100	6.9	7000 (188)	14800 (397)	18800 (504)			
	125	8.6	8650 (232)	18800 (504)				
3 PSIG (0.21 BAR) 655-697-008 ±0.6 PSIG (0.041 BAR)	5	0.34	1100 (29.5)	1950 (52.3)	2550 (68.3)	4700 (126)	6000 (161)	7450 (200)
	10	0.69	1550 (41.5)	3000 (80.4)	4750 (127)	8600 (230)	12200 (327)	15400 (413)
	15	1.0	2050 (54.9)	3850 (103)	5950 (159)	12500 (338)	16200 (434)	20300 (544)
	20	1.4	2400 (64.3)	4850 (130)	8200 (220)	17000 (456)	21800 (584)	
	25	1.7	2800 (75.0)	5750 (154)	9800 (263)	19700 (528)	23000 (616)	
	30	2.1	3150 (84.4)	6450 (173)	11600 (311)	22500 (603)	26500 (710)	
	40	2.8	3650 (97.8)	7850 (210)	14300 (383)	26400 (708)		
	45	3.1	4100 (110)	8900 (239)	15500 (415)	28500 (764)		
	50	3.5	4350 (117)	9450 (253)	17000 (456)	29600 (793)		
	60	4.1	5100 (137)	11100 (297)	19850 (532)	29900 (801)		
	80	5.5	6350 (170)	14350 (385)	25200 (675)			
	100	6.9	7250 (194)	17250 (462)	29400 (788)			
	125	8.6	9400 (252)	21000 (563)				
3 PSIG (0.21 BAR) 655-697-008 ± 1% ABS ±0.18 psia (0.012 BAR)	5	0.34	650 (17.4)	1100 (29.3)	790 (21.2)	1500 (40.2)	1700 (45.6)	1750 (46.9)
	10	0.69	1000 (26.8)	1250 (33.5)	1500 (40.2)	2500 (67.0)	3700 (99.2)	4300 (115)
	15	1.0	1250 (33.5)	1750 (46.9)	2000 (53.6)	2900 (77.7)	3750 (101)	6000 (161)
	20	1.4	1450 (38.9)	2400 (64.3)	2200 (58.9)	4100 (110)	5750 (154)	
	25	1.7	1600 (42.8)	2900 (77.7)	4000 (107)	6900 (185)	6400 (172)	
	30	2.1	1950 (52.3)	3550 (95.1)	4400 (118)	8700 (233)	6700 (180)	
	40	2.8	2700 (72.4)	3850 (103)	5500 (147)	6450 (173)		
	45	3.1	2900 (77.7)	5400 (145)	9000 (241)	8000 (214)		
	50	3.5	3300 (88.4)	5700 (153)	9100 (244)	7900 (212)		
	60	4.1	3900 (105)	7200 (193)	11500 (308)	10300 (276)		
	80	5.5	5250 (141)	9200 (247)	9800 (263)[1]			
	100	6.9	6250 (168)	11300 (303)	10900 (292)[1]			
	125	8.6	7750 (208)	12650 (339)				
3 PSIG (0.21 BAR) 655-697-008 ± 2% ABS ±0.35 psia (0.024 BAR)	5	0.34	800 (21.4)	1450 (38.9)	1700 (45.6)	3150 (84.4)	3250 (87.1)	4000 (107)
	10	0.69	1300 (34.8)	2150 (57.6)	3200 (85.8)	5550 (149)	7200 (193)	9000 (241)
	15	1.0	1550 (41.5)	2850 (76.4)	4050 (109)	6800 (182)	8250 (221)	10800 (289)
	20	1.4	1850 (49.6)	3300 (88.4)	5400 (145)	9300 (249)	10900 (292)	
	25	1.7	2350 (62.9)	4650 (125)	6700 (180)	11250 (302)	15600 (418)	
	30	2.1	2450 (65.7)	5100 (137)	8600 (230)	12250 (328)	17350 (465)	
	40	2.8	3150 (84.4)	6950 (186)	11400 (306)	15150 (406)		
	45	3.1	3400 (91.1)	7650 (205)	11900 (319)	18150 (486)		
	50	3.5	3800 (102)	8500 (228)	14000 (375)	20200 (541)		
	60	4.1	4300 (115)	9850 (264)	19000 (509)	21150 (567)		
	80	5.5	5500 (147)	12600 (338)	23100 (619)			
	100	6.9	6500 (174)	15500 (415)	23650 (634)			
	125	8.6	8100 (217)	20650 (553)				

1. Limited due to boost

- Shaded areas show where maximum operating inlet pressure for a given port diameter is exceeded.

P203 P Flow Capacities in SCFH (Nm³/h) of 0.6 Specific Gravity Natural Gas

Outlet Pressure, Spring Part Number, and Accuracy	Inlet Pressure		NPT 1-1/2 Body Size					
			Orifice Size, Inches (mm)					
	PSIG	BAR	1/4 (6.4)	3/8 (9.5)	1/2 (13)	3/4 (19)	1 (25)	1-3/16 (30)
6 inches w.c. (15 mbar) 655-697-003 ±1 inch w.c. 2.5 mbar	0.4	0.028				1200 (32.2)	1500 (40.2)	1750 (46.9)
	0.5	0.034				1600 (42.9)	1900 (50.9)	2200 (59.0)
	1	0.07	400 (10.7)	900 (42.1)	1300 (34.8)	2300 (61.6)	2900 (77.7)	3300 (88.4)
	1.5	0.10	500 (13.4)	1150 (30.8)	1650 (44.2)	3000 (80.4)	3600 (96.5)	4300 (115)
	2	0.14	600 (16.1)	1400 (37.5)	2000 (53.6)	3500 (93.8)	4200 (113)	5500 (147)
	5	0.34	1000 (26.8)	2300 (61.6)	3500 (93.8)	5700 (153)	7300 (196)	7700 (206)
	13	0.90	1650 (44.2)	3700 (99.2)	6200 (166)	10,000 (268)	13,500 (362)	13,500 (362)
	25	1.7	2400 (64.3)	5200 (139)	9000 (241)	13,500 (362)	13,500 (362)	
	60	4.1	4400 (118)	9600 (257)	13,500 (362)	13,500 (362)		
	100	6.9	7000 (188)	13,500 (362)	13,500 (362)			
	125	8.6	7000 (188)	13,500 (362)				
7 inches w.c. (17 mbar) 655-697-004 ± 1 inch w.c. 2 inches mbar	0.4	0.028				950 (25.5)	1350 (36.2)	1550 (41.5)
	0.5	0.034				1500 (40.2)	1700 (45.6)	1950 (52.3)
	1	0.07	400 (10.7)	800 (21.4)	1200 (52.2)	2000 (53.6)	2600 (85.8)	3000 (80.4)
	1.5	0.10	500 (13.4)	1050 (28.1)	1500 (40.2)	2550 (68.3)	3200 (85.8)	4100 (110)
	2	0.14	600 (16.1)	1300 (34.8)	1800 (48.2)	3000 (80.4)	3700 (99.2)	5000 (134)
	5	0.34	1000 (26.8)	2100 (56.3)	3100 (83.1)	5000 (134)	6500 (174)	7000 (188)
	13	0.90	1650 (44.2)	3300 (88.4)	5500 (147)	8600 (230)	12,000 (322)	13,500 (362)
	25	1.7	2400 (64.3)	5000 (134)	8000 (214)	13,500 (362)	13,500 (362)	
	60	4.1	4400 (118)	9400 (252)	13,500 (362)	13,500 (362)		
	100	6.9	7000 (188)	13,500 (362)	13,500 (362)			
	125	8.6	7000 (188)	13,500 (362)				
11 inches w.c. (27 mbar) 655-697-005 ± 2 inches w.c. (5 mbar)	0.5	0.03				1450 (38.9)	1650 (44.2)	1850 (49.8)
	1	0.07	375 (10.1)	750 (20.1)	1100 (29.5)	1800 (48.2)	2500 (67.0)	2900 (77.7)
	1.5	0.10	475 (12.7)	1000 (26.8)	1450 (38.9)	2400 (64.3)	3100 (83.1)	3900 (105)
	2	0.14	550 (14.7)	1250 (33.5)	1700 (45.6)	3000 (80.4)	3600 (96.5)	4800 (129)
	5	0.34	950 (25.5)	2000 (53.6)	2900 (77.7)	4800 (129)	6500 (174)	6700 (180)
	13	0.90	1550 (41.5)	3100 (83.1)	5100 (137)	9000 (241)	11,000 (295)	13,500 (362)
	25	1.7	2260 (60.6)	4700 (126)	8000 (214)	13,500 (362)	13,500 (362)	
	60	4.1	4200 (113)	8900 (239)	13,500 (362)	13,500 (362)		
	100	6.9	6600 (177)	13,500 (362)	13,500 (362)			
	125	8.6	6600 (177)	13,500 (362)				
20 inches w.c. (50 mbar) 655-697-006 ± 3 inches w.c. (7 mbar)	1	0.07	300 (8.04)	500 (13.4)	950 (25.5)	1000 (26.8)	1300 (34.8)	2000 (53.6)
	2	0.14	500 (13.4)	950 (24.5)	1500 (40.2)	2000 (53.6)	2900 (77.7)	4000 (107)
	5	0.34	850 (22.8)	1700 (45.6)	2400 (64.3)	4000 (107)	5000 (134)	5300 (142)
	13	0.90	1350 (36.2)	2800 (75.0)	4400 (118)	6500 (174)	8700 (233)	13,500 (362)
	25	1.7	2000 (53.6)	4800 (129)	6600 (177)	10,000 (268)	13,500 (362)	
	60	4.1	3700 (99.2)	9000 (241)	12,700 (340)	13,500 (362)		
	100	6.9	6000 (161)	13,500 (362)	13,500 (362)			
	125	8.6	6000 (161)	13,500 (362)				
1 PSIG 0.069 BAR 655-697-007 ±0.2 PSIG 0.014 BAR	2.0	0.14	500 (13.4)	750 (20.1)	1100 (29.5)	1400 (37.5)	2400 (64.3)	3000 (80.4)
	6.0	0.41	1100 (29.5)	1800 (48.2)	2500 (67.0)	4000 (107)	5200 (139)	7000 (188)
	14	0.97	1500 (40.5)	3000 (80.4)	4500 (121)	7000 (188)	9000 (241)	13,500 (362)
	30	2.1	2300 (61.6)	4800 (129)	7000 (188)	11,000 (295)	13,500 (362)	
	60	4.1	4400 (118)	9200 (247)	10,500 (281)	13,500 (362)		
	100	6.9	7000 (188)	13,500 (362)	13,500 (362)			
	125	8.6	7000 (188)	13,500 (362)				
3 PSIG 0.069 BAR 655-697-008 ±0.6 PSIG 0.041 BAR	3.0	0.21	500 (13.4)	1000 (26.8)	1500 (40.2)	2000 (53.6)	3200 (85.8)	3600 (96.5)
	7.0	0.48	1000 (26.8)	2200 (59.0)	3400 (91.1)	5700 (152)	7000 (188)	8800 (236)
	14	0.97	1500 (40.2)	3000 (80.4)	5700 (153)	10,000 (268)	11,000 (295)	13,500 (362)
	30	2.1	2400 (63.3)	5000 (134)	7500 (201)	13,500 (362)	13,500 (362)	
	60	4.1	4300 (115)	9400 (252)	11,500 (308)	13,500 (362)		
	100	6.9	6800 (182)	11,400 (306)	13,500 (362)			
	125	8.6	6800 (182)	11,400 (306)				

1. Limited due to boost

- Shaded areas show where indicated droop would be exceeded regardless of capacity.
- Shaded areas show where maximum operating inlet pressure for a given port diameter is exceeded.

P203 Parts List

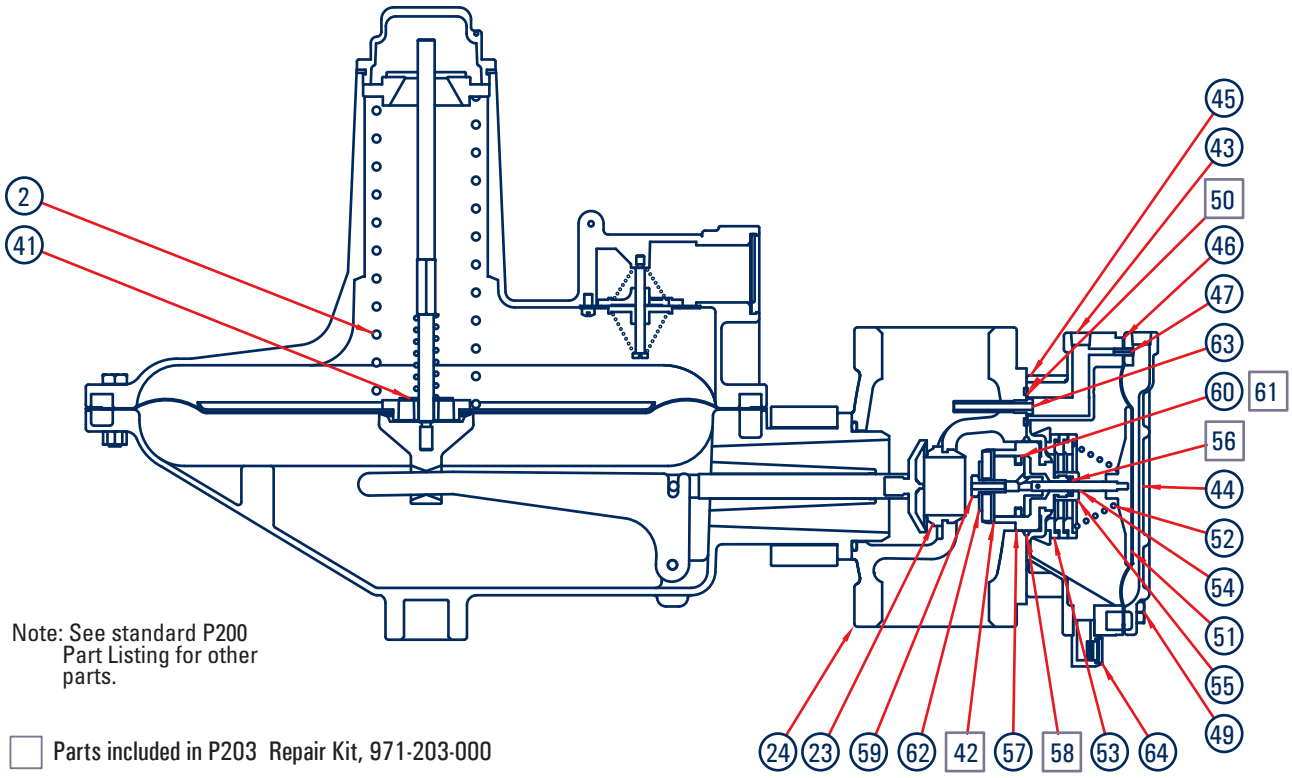

Note: See standard P200 Part Listing for other parts.

☐ Parts included in P203 Repair Kit, 971-203-000

P203 Body Positions

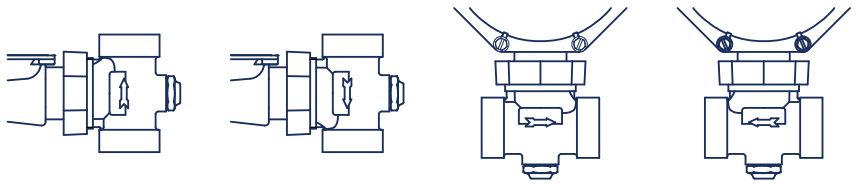

UP 1 | **DOWN** 2 | **RIGHT** 3 | **LEFT** 4

P203 Vent Positions

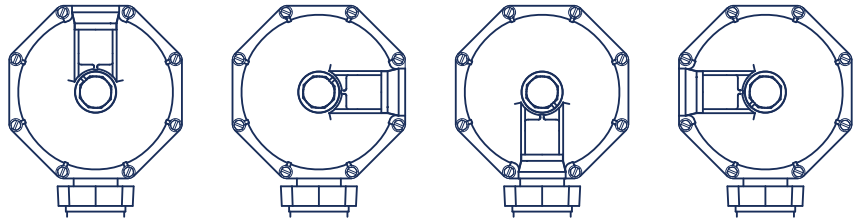

12 C | **3** D | **6** E | **9** F

Item	Description	Qty.	Part Number
2	**Range Spring - Normal (0)**	1	See Table
	Brown, Plated Steel	1	655-697-002
	Red Plated Steel	1	655-697-003
	Black, Plated Steel	1	655-697-004
	Gray, Plated Steel	1	655-697-005
	Dark Green, Plated Steel	1	655-697-006
	Range Spring - High (H)		
	Dark Blue, Plated Steel	1	655-697-007
	Orange, Plated Steel	1	655-697-008
23	**Orifices**		
	1/4" Aluminum	1	688-061-000
	3/8" Aluminum	1	688-061-001
	1/2" Aluminum	1	688-061-002
	3/4" Aluminum	1	688-061-003
	1" Aluminum	1	688-061-004
	1-3/16" Aluminum	1	688-061-005
24	**Body**		
	Iron 1.5″ NPT	1	664-396-000
	Iron 1.5″ x 2" NPT	1	664-396-001
	Iron 2″ NPT	1	664-384-000
	Iron 2" , 125 FF	1	664-385-000
	P203 Monitor Parts Only - See P200 for other Parts		
41	Relief Restriction	1	662-237-000
42	Disk Holder Assembly	1	822-044-000
43	Pipe Plug	2	639-000-054
44	Monitor Spring Case	1	604-264-000
45	Monitor Lower Case	1	629-237-000
46	Diaphragm	1	618-101-000
47	Roll Pin	1	635-074-000
48	Cap Screw	4	648-466-009
	P203 Monitor Parts Only - See P200 for other Parts		
49	Cap Screw	8	648-466-000
50	O-ring	1	649-000-185
51	Diaphragm Plate	1	638-079-000
52	**Monitor Springs**		
	Green Spring (See Monitor Data Table)	1	655-746-000
	Red Spring (See Monitor Data Table)	1	655-746-001
	Blue Spring (See Monitor Data Table)	1	655-746-002
	Silver Spring (See Monitor Data Table)	1	655-746-003
53	Lower Spring Seat (See Monitor Data Table)	0-3	650-178-000
54	Piston Assembly	1	809-237-000
55	O-ring Retainer	1	643-206-000
56	Piston Assembly O-ring	1	649-000-001
57	Piston Guide	1	626-112-000
58	Piston Guide O-ring	1	649-309-003
59	Disk Holder Screw	1	648-545-000
60	Piston Ring Expander	1	644-062-000
61	Piston Ring	1	644-063-000
62	Washer	1	662-236-002
63	Pilot Tube	1	660-082-000
64	Vent Assembly	1	836-004-001
65	Sealing Screw (P203P only)	1	645-544-000
66	Stabilizer Gasket (P203S only)	1	624-088-000
67	Stabilizer Frame (P203S only)	1	704-008-000
68	Stabilizer Snap Ring (P203S only)	1	693-028-000

Item	Description	Qty.	Part Number
69	Stabilizer Neck (P203S only)	1	608-084-000

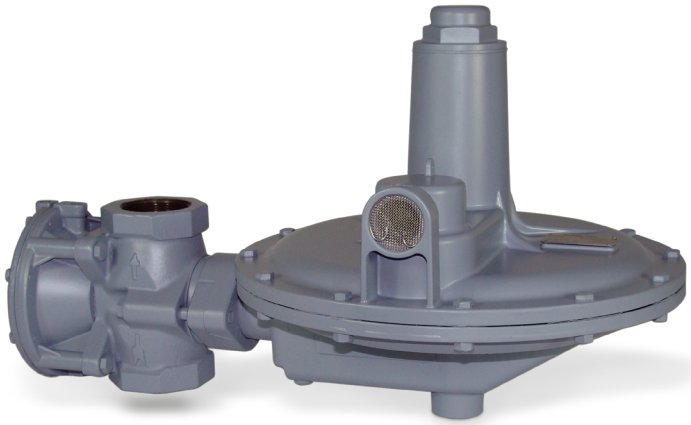

P212 Pressure Regulator

- Minimize Sudden Downstream Load Change
- Wide Pressure Ranges
- Full Relief Valve

The BelGAS P212 gas pressure regulator is a direct operating, spring loaded adjustable regulator, used in applications where pressure reduction is required.

The P212 is built on the reliable and time proven P202 platform and has been enhanced to offer a full relieving regulator through the diaphragm relief device. When used with a 2.5" bonnet vent port, the P212 becomes a fully relieving pressure regulator.

Available in pressure ranges from 2" of water column up to 5 PSIG, making them ideal for use in applications where wide variations in pressure reduction are also required. The BelGAS Type P212 is offered with choice of ductile cast iron or WCB steel body, flanged or threaded.

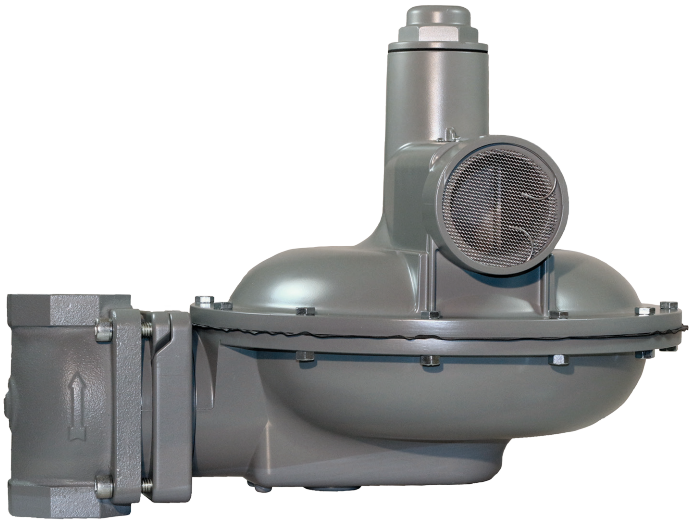

Applications

- Compressors
- Gas Engines
- Service Regulators

Materials of Construction

Adjusting Screw	Aluminum
Body	Ductile Iron or WCB Steel
Bonnet	Aluminum
Closing Cap	Aluminum
Diaphragm	Nitrile
Lower Casing	Aluminum
Molded Seat Assembly	Nitrile
Orifice	Aluminum
Flange	Ductile Iron / WCB Steel

Specifications

Maximum Inlet	See Table 1	
Maximum Emergency Outlet	15 PSIG	
Pressure Ranges	See Table 2	
Port Sizes	1.25 NPT	
	1.5 NPT	
	1.5 NPT x 2 NPT	
	2 NPT	
Orifice Sizes	1/4"	
	3/8"	
	1/2"	
	3/4"	
	1"	
	1-3/16"	
End Connections	NPT	
	150 RF Flange	Steel Units Only
	125 FF Flange	Iron Units Only

P212 Series Maximum Inlet Pressure

Table 1

Orifice Inches	Range	Maximum Inlet Pressure	
		PSIG	BAR
1/4"	Any	125	8.618
3/8"	Any	125	8.618
1/2"	Any	100	6.894
3/4"	Any	60	4.136
1"	2-4.5" thru 14-30" WC	25	1.723
	1-2 thru 2-5 PSIG	30	2.068
1-3/16"	2-4.5" thru 14-30" WC	13	0.896
	1-2 thru 1.5-3.25 PSIG	14	0.965
	2-5 PSIG	20	1.378

P212 Series Range Springs

Table 2

Model	Spring Ranges		Spring Color	Part Number
	W.C. or PSI	Bar		
P212L	2 - 4.5 WC	0.005 - 0.011	Brown	655-697-002
	3.5- 6.5 WC	0.009 -0.016	Red	655.697-003
	5 - 9 WC	0.012 - 0.022	Black	655-697-004
	6 - 14 WC	0.015 - 0.035	Purple	655-697-011
	8.5 - 18 WC	0.021 - 0.045	White	655-697-005
	14 - 30 WC	0.035 - 0.075	Dark Green	655-697-006
P212H	1 - 2 PSIG	0.069 - 0.138	Dark Blue	655-697-007
	1.5 - 3.25 PSIG	0.103 - 0.224	Orange	655-697-008
	2 - 5 PSIG	0.138 - 0.345	Yellow	655-697-009

P212 Regulator Rebuild Kits

	Kit Includes	Part Number
P212L & P212H Ranges	Diaphragm, disk holder assembly, cap gasket and body/lower casing o-ring	971-212-000

P212 Part Matrix

P212										
									Configuration	
	L								Normal	
	H								High	
									Port Size	
		12							1.25 NPT	
		14							1.5 NPT	
		15							1.5 x 2 NPT	
		16							2 NPT	
									Spring Range - WC or PSI / mBAR	
			004						2 - 4.5" WC / 4.98 - 11.20	L Version
			006						3.5 - 6.5" WC / 8.71 - 16.19	L Version
			009						5 - 9" WC / 12.45 - 22.41	L Version
			014						6 - 14" WC / 14.94 - 34.87	L Version
			018						8.5 - 18" WC / 21.17 - 44.83	L Version
			030						14 - 30" WC / 34.87 - 74.72	L Version
			002						1 - 2 PSIG / 68.94 - 137.89	H Version
			003						1.5 - 3.25 PSIG / 103.42 - 224.07	H Version
			005						2 - 5 PSIG / 137.89 - 344.73	H Version
									Special Construction	
				0					None	
				A					150 RF (2" Steel Only)	
				E					125 FF (2" Iron Only)	
									Orifice	
					4				1/4"	
					6				3/8"	
					8				1/2"	
					B				3/4"	
					D				1"	
					F				1-3/16"	
									Port Orientation	
						1			Up (Standard)	
						2			Down	
						3			Right	
						4			Left	
									Bonnet Orientation	
							C		12 O'Clock	
							D		3 O'Clock (Standard)	
							E		6 O'Clock	
							F		9 O'Clock	
									Body Material	
								0	Iron	
								2	Steel	

P212 Dimensions

Body Size	A			B	C	D		
Inches	NPT	125 FF Flange	150 RF Flange			NPT	125 FF Flange	150 RF Flange
1.25	6.13			11.03	18.09	1.85		
1.5	6.13		10	11.03	18.09	1.85		1.85
1.5 x 2	6.13			11.03	18.09	1.85		

P212 Standard

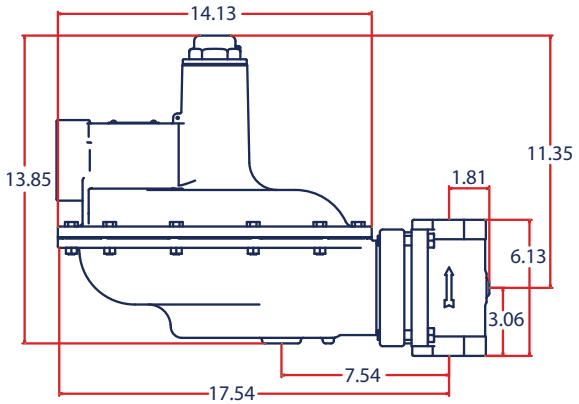

P212 Flanged

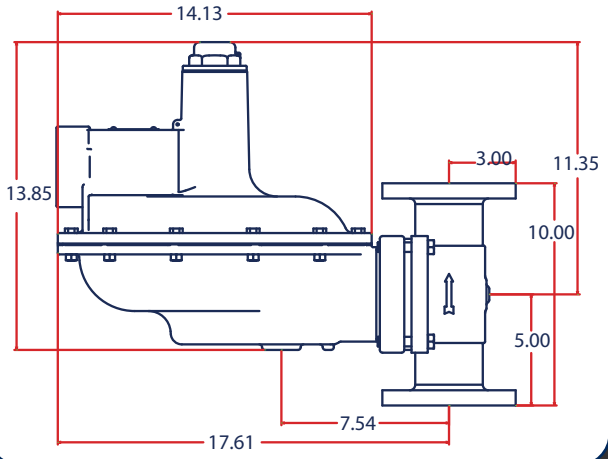

P212 Head Only

P212						
					Configuration	
	L				Normal	
	H				High	
					Spring Range - WC or PSIG / mBAR	
		004	L Version Only		2 - 4.5" WC 4.98 - 11.20	L Version
		006			3.5 - 6.5" WC 8.71 - 16.19	
		009			5 - 9" WC 12.45 - 22.41	
		014			6 - 14" WC 14.94 - 34.87	
		018			8.5 - 18" WC 21.17 - 44.83	
		030			14 - 30" WC 34.87 - 74.72	
		002	H Version Only		1 - 2 PSIG 68.94 - 137.89	H Version
		003			1.5 - 3.25 PSIG 103.42 - 224.07	
		005			2 - 5 PSIG 137.89 - 344.73	
					Special Construction	
			0		None	
					Bonnet Orientation	
				C	12 O'Clock	
				D	3 O'Clock (Standard)	
				E	6 O'Clock	
				F	9 O'Clock	

P212 Vent Orientation

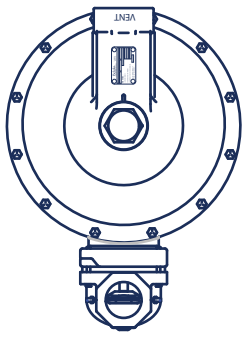

12 O'CLOCK - CODE C

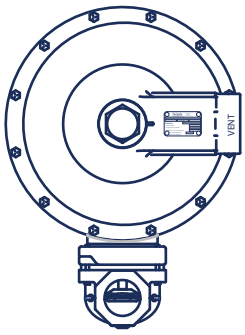

3 O'CLOCK - CODE D
STANDARD

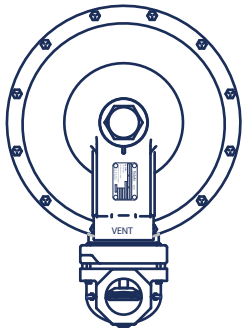

6 O'CLOCK - CODE E

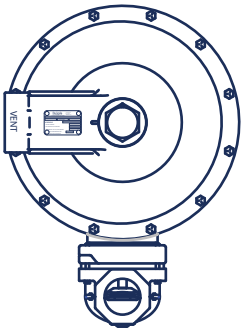

9 O'CLOCK - CODE F

P212 Body Positions

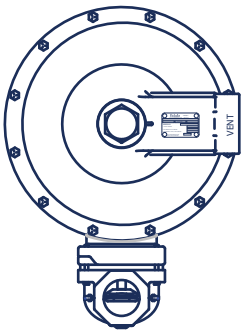

UP - CODE 1
STANDARD

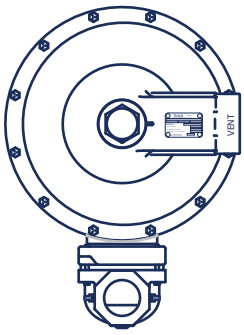

DOWN - CODE 2

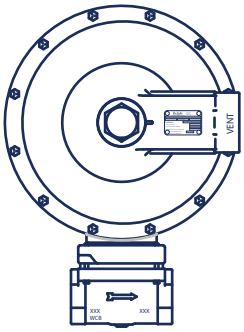

RIGHT - CODE 3

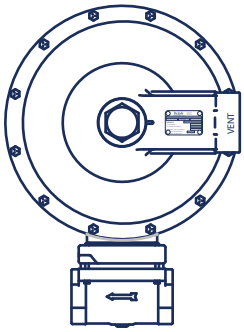

LEFT - CODE 4

P212 Normal (L) Relief Capacities

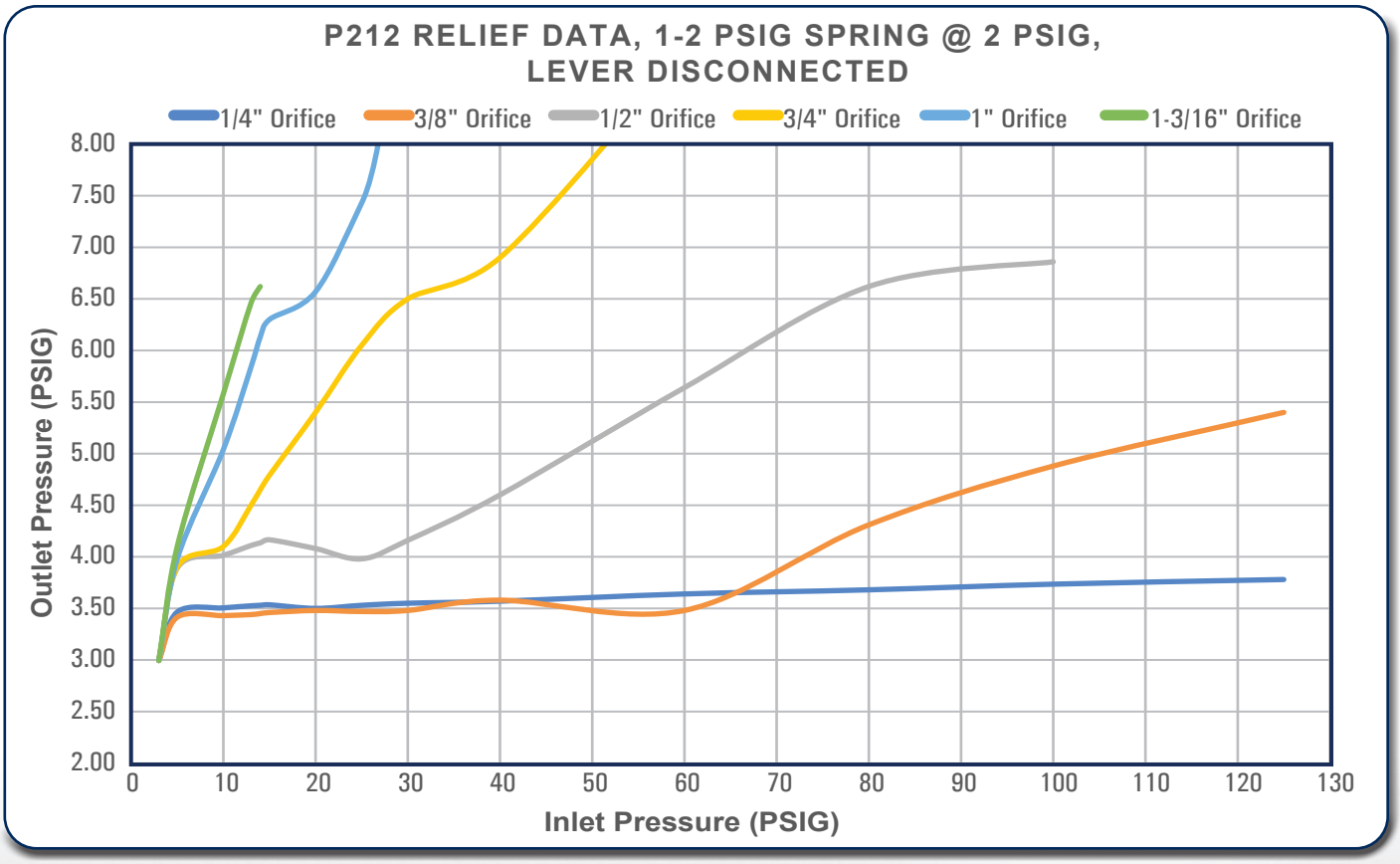

P212 High (H) Relief Capacities

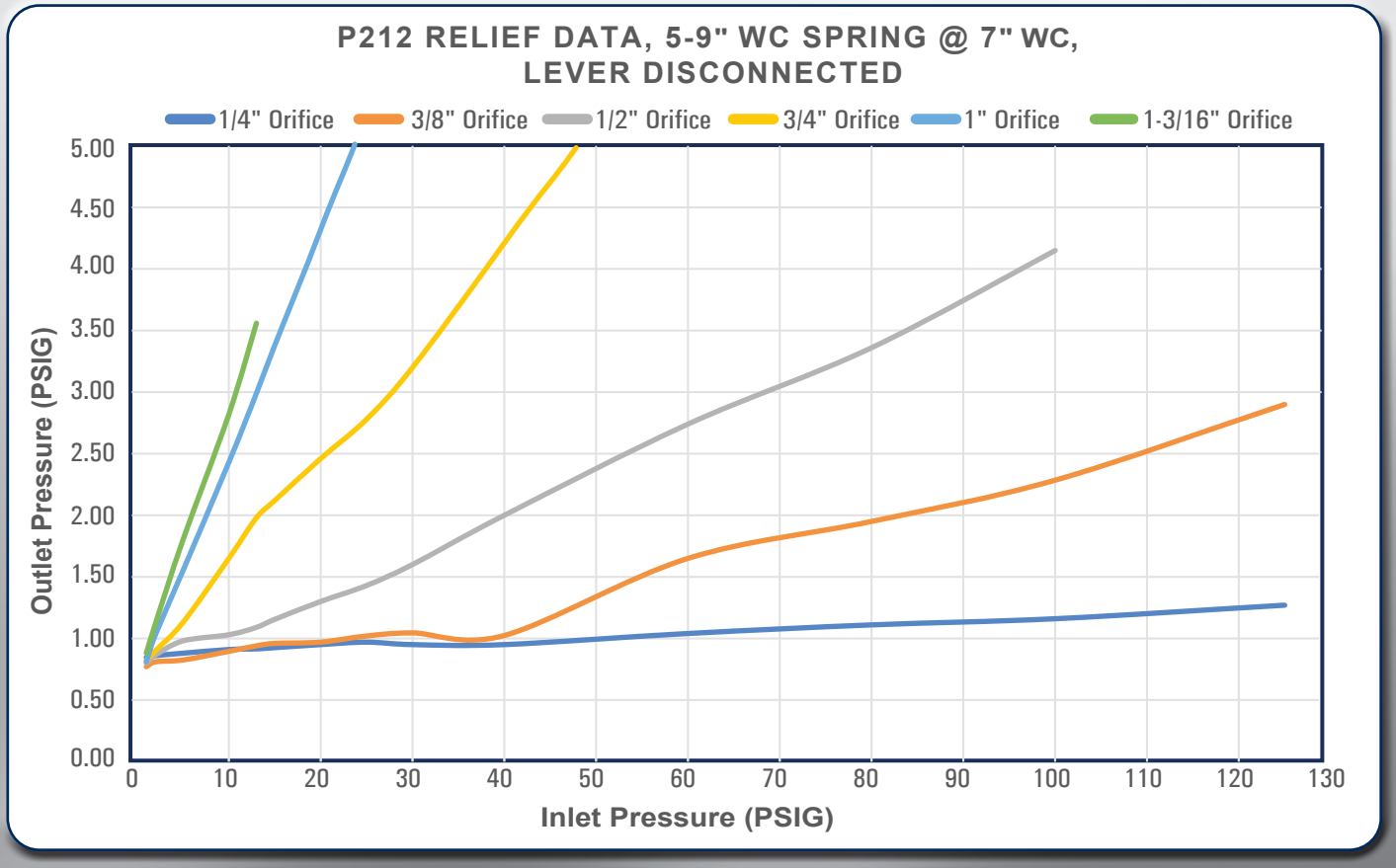

P212 Flow Capacities in SCFH (Nm³/h) of 0.6 Specific Gravity Natural Gas

Outlet Pressure, Spring Part Number, and Accuracy	Inlet Pressure		NPT 1-1/2 Body Size					
			Orifice Size, Inches (mm)					
	PSIG	BAR	1/4 (6.4)	3/8 (9.5)	1/2 (13)	3/4 (19)	1 (25)	1-3/16 (30)
4 inches w.c. (10 mbar)	0.4	0.028				1000 (26.8)	1400 (37.5)	1600 (42.8)
	0.5	0.034				1400 (37.5)	1600 (42.8)	1800 (48.2)
	1	0.07	400 (10.7)	800 (21.4)	1200 (32.2)	2100 (56.3)	2500 (67.0)	2700 (72.4)
655-697-002 or 655-697-003	1.5	0.10	500 (13.4)	1050 (28.1)	1600 (42.9)	2500 (67.0)	3000 (80.4)	3200 (85.8)
	2	0.14	600 (16.1)	1300 (34.8)	2100 (56.3)	2800 (75.0)	3500 (93.8)	3800 (102)
	5	0.34	1150 (30.8)	2200 (58.9)	3300 (88.4)	4500 (121)	5300 (142)	6000 (161)
1 inch w.c. (2 mbar) droop 2 inches w.c. (5 mbar) boost	13	0.90	1600 (42.8)	3600 (96.4)	6200 (166)	7000 (188)	6000 (161)	6850 (184)
	25	1.7	2550 (68.3)	5000 (134)	7350 (197)	8950 (240)	9000 (241)	
	60	4.1	4750 (127)	5100 (137)	7050 (189)	5600 (150)[1]		
	100	6.9	6650 (186)	7300 (196)	5200 (139)[1]			
	125	8.6	6950 ()	8300 (222)				
7 inches w.c. (17 mbar)	0.4	0.028				900 (24.1)	1300 (34.8)	1450 (38.9)
	0.5	0.034				1200 (32.2)	1550 (41.5)	1750 (46.9)
	1	0.07	400 (10.7)	800 (21.4)	1100 (29.5)	1900 (50.9)	2300 (61.6)	2500 (67.0)
655-697-004	1.5	0.10	500 (13.4)	1050 (28.1)	1500 (40.2)	2300 (61.6)	2800 (75.0)	1800 (48.2)
	2	0.14	600 (16.1)	1300 (34.8)	1900 (50.9)	2100 (56.3)	3300 (88.4)	1800 (48.2)
	5	0.34	950 (25.5)	2100 (56.3)	3200 (85.8)	3350 (89.8)	5100 (137)	4500 (121)
1 inch w.c. (2 mbar) droop 2 inches w.c. (5 mbar) boost	13	0.90	1600 (42.8)	2200 (58.9)	3300 (88.4)	5800 (155)	8000 (214)	8000 (214)
	25	1.7	2200 (58.9)	5200 (139)	6800 (182)	8400 (225)	8750 (235)	
	60	4.1	4300 (115)	9200 (247)	10100 (271)	9900 (265)		
	100	6.9	7500 (201)	10500 (281)	9200 (247)[1]			
	125	8.6	9050 (243)	9800 (263)[1]				
11 inches w.c. (27 mbar)	0.5	0.03				800 (21.4)	1500 (40.2)	1700 (45.6)
	1	0.07	400 (10.7)	700 (18.7)	1100 (29.5)	1800 (48.2)	2200 (58.9)	2450 (65.7)
	1.5	0.10	500 (13.4)	950 (25.5)	1450 (38.9)	2300 (61.6)	2800 (75.0)	2600 (69.7)
655-697-005	2	0.14	600 (16.1)	1200 (32.2)	1700 (45.6)	1950 (52.3)	3200 (85.8)	2750 (73.7)
	5	0.34	950 (25.5)	2000 (53.6)	2900 (77.7)	3800 (102)	5100 (137)	5150 (138)
	13	0.90	1600 (42.8)	3400 (91.1)	3700 (99.2)	6100 (163)	7250 (194)	7650 (205)
± 2 inches w.c. (5 mbar)	25	1.7	2100 (56.3)	5150 (138)	7100 (190)	7950 (213)	9400 (252)	
	60	4.1	4400 (118)	9250 (248)	9400 (252)	10400 (279)		
	100	6.9	7300 (196)	10000 (268)	10100 (271)			
	125	8.6	9050 (243)	10800 (289)				
14 inches w.c. (35 mbar)	1	0.07	450 (12.1)	800 (21.4)	1000 (26.8)	1250 (33.5)	1500 (40.2)	1950 (52.3)
	1.5	0.10	500 (13.4)	850 (22.8)	1050 (28.1)	1550 (41.5)	1650 (44.2)	2350 (62.9)
	2	0.14	550 (14.7)	1150 (30.8)	1400 (37.5)	1750 (46.9)	2300 (61.6)	2500 (67.0)
655-697-005	5	0.34	1000 (26.8)	1200 (32.2)	2050 (54.9)	3000 (80.4)	4300 (115)	4750 (127)
	13	0.90	1750 (46.9)	3050 (81.7)	4250 (114)	6100 (163)	7300 (196)	7850 (210)
± 2 inches w.c. (5 mbar)	25	1.7	2500 (67.0)	4750 (127)	5650 (151)	8700 (233)	8700 (233)	
	60	4.1	4750 (127)	9450 (253)	9950 (267)	10550 (283)		
	100	6.9	7450 (200)	10400 (279)	10600 (284)			
	125	8.6	9050 (243)	10450 (280)				
20 inches w.c. (50 mbar)	1	0.07	300 (8.04)	500 (13.4)	750 (20.1)	1000 (26.8)	1300 (34.8)	1700 (45.6)
	2	0.14	500 (13.4)	950 (25.5)	1400 (37.5)	2000 (53.6)	2800 (75.0)	3100 (83.1)
	5	0.34	900 (24.1)	1700 (45.6)	2500 (67.0)	4200 (113)	5000 (134)	5500 (147)
655-697-006	13	0.90	1500 (40.2)	3200 (85.8)	5400 (145)	6500 (174)	7000 (188)	7100 (190)
	25	1.7	2100 (56.3)	4700 (126)	7000 (188)	8250 (221)	9350 (251)	
± 3 inches w.c. (7 mbar)	60	4.1	4750 (127)	8900 (239)	9950 (267)	10600 (284)		
	100	6.9	7400 (198)	10500 (281)	10800 (289)			
	125	8.6	9200 (247)	10950 (293)				

1. Limited due to boost

- Shaded areas show where indicated droop would be exceeded regardless of capacity.
- Shaded areas show where maximum operating inlet pressure for a given port diameter is exceeded.

P212 Flow Capacities in SCFH (Nm³/h) of 0.6 Specific Gravity Natural Gas

BelGAS

Outlet Pressure, Spring Part Number, and Accuracy	Inlet Pressure		NPT 2 (DN 50) Body Size					
			Orifice Size, Inches (mm)					
	PSIG	BAR	1/4 (6.4)	3/8 (9.5)	1/2 (13)	3/4 (19)	1 (25)	1-3/16 (30)
4 inches w.c. (10 mbar) 655-697-002 or 655-697-003 1 inch w.c. (2 mbar) droop 2 inches w.c. (5 mbar) boost	0.4	0.028				1200 (32.3)	1600 (42.8)	1800 (48.2)
	0.5	0.034				1700 (45.6)	2200 (58.9)	2400 (64.3)
	1	0.07	400 (10.7)	900 (24.1)	1300 (34.8)	2800 (75.0)	3200 (85.8)	3800 (102)
	1.5	0.10	500 (13.4)	1100 (29.5)	1700 (45.5)	3600 (96.5)	4300 (115)	5000 (134)
	2	0.14	600 (16.1)	1400 (37.5)	2200 (58.9)	4500 (121)	5500 (147)	6400 (172)
	5	0.34	1000 (26.8)	2300 (61.6)	3700 (99.2)	7800 (209)	9500 (255)	12700 (340)
	13	0.90	1650 (44.2)	3700 (99.2)	6500 (174)	13000 (348)	14000 (375)	14500 (389)
	25	1.7	2500 (64.3)	5200 (139)	9200 (247)	13000 (348)	18000 (482)	
	60	4.1	4450 (119)	9000 (241)	14550 (390)	15000 (402)		
	100	6.9	5500 (147)	9500 (255)	12900 (346)[1]			
	125	8.6	7250 (194)	3900 (105)[1]				
7 inches w.c. (17 mbar) 655-697-004 1 inch w.c. (2 mbar) droop 2 inches w.c. (5 mbar) boost	0.4	0.028				950 (25.5)	1400 ()37.5	1600 (42.8)
	0.5	0.034				1500 (40.2)	1800 (48.2)	2000 (53.6)
	1	0.07	400 (10.7)	800 (21.4)	1200 (32.2)	2300 (61.6)	2800 (75.0)	3300 (88.4)
	1.5	0.10	500 (13.4)	1050 (28.1)	1600 (42.8)	3100 (83.1)	3600 (96.5)	4500 (121)
	2	0.14	600 (16.1)	1300 (34.8)	2000 (53.6)	4000 (107)	4500 (121)	6000 (161)
	5	0.34	1000 (26.8)	2100 (56.3)	3500 (93.8)	7700 (206)	9400 (252)	9400 (252)
	13	0.90	1650 (44.2)	3500 (93.8)	6400 (172)	10000 (268)	20200 (541)	21200 (568)
	25	1.7	2400 (64.3)	5200 (139)	10300 (276)	20000 (536)	11800 (316)[1]	
	60	4.1	4450 (119)	9000 (241)	12000 (322)	20700 (555)		
	100	6.9	7500 (201)	10000 (268)	13100 (351)			
	125	8.6	9500 (255)	10300 (276)				
11 inches w.c. (17 mbar) 655-697-005 ± 2 inches w.c. (5 mbar)	0.5	0.03				800 (21.4)	1500 (40.2)	1600 (42.8)
	1	0.07	400 (10.7)	750 (20.1)	1100 (29.5)	1800 (48.2)	2500 (64.0)	2600 (69.7)
	1.5	0.10	500 (13.4)	1000 (26.8)	1450 (38.9)	2500 (67.0)	3400 (91.1)	3350 (89.8)
	2	0.14	600 (16.1)	1200 (32.2)	1700 (45.6)	3100 (83.1)	3600 (113)	3750 (101)
	5	0.34	1000 (26.8)	2000 (53.6)	3000 (80.4)	7300 (196)	7000 (188)	8500 (228)
	13	0.90	1600 (42.9)	3400 (91.1)	6200 (166)	10350 (277)	17650 (473)	18100 (485)
	25	1.7	2400 (64.3)	5650 (151)	10350 (277)	19300 (517)	23450 (628)	
	60	4.1	4450 (119)	11350 (304)	19300 (517)	20200 (541)		
	100	6.9	7450 (200)	16650 (446)	20200 (541)			
	125	8.6	9500 (255)	17500 (469)				
14 inches w.c. (35 mbar) 655-697-005 ± 2 inches w.c. (5 mbar)	1	0.07	450 (12.1)	700 (18.8)	1100 (29.5)	1500 (40.2)	1700 (45.6)	2700 (72.4)
	1.5	0.10	550 (14.7)	850 (22.8)	1200 (32.3)	1900 (50.9)	2700 (72.4)	3600 (96.5)
	2	0.14	600 (16.1)	1000 (26.8)	1900 (50.9)	2800 (75.0)	3800 (102)	3800 (102)
	5	0.34	1050 (28.1)	1750 (46.9)	2800 (75.0)	4000 (107)	5300 (142)	10600 (284)
	13	0.90	1750 (46.9)	3700 (99.2)	5700 (153)	14400 (386)	18000 (482)	18500 (496)
	25	1.7	2600 (69.7)	5700 (153)	10200 (273)	18000 (482)	25400 (681)	
	60	4.1	4800 (129)	10900 (292)	11000 (295)	19600 (525)		
	100	6.9	7400 (198)	16500 (442)	14100 (378)			
	125	8.6	9100 (244)	18000 (482)				
20 inches w.c. (50 mbar) 655-697-006 ± 3 inches w.c. (7 mbar)	1	0.07	300 (8.04)	750 (20.1)	550 (14.7)	1250 (33.5)	1700 (45.6)	1800 (48.2)
	2	0.14	500 (13.4)	1150 (30.8)	1700 (45.6)	1900 (50.9)	2350 (62.9)	3250 (87.1)
	5	0.34	900 (24.1)	1650 (44.2)	2150 (57.6)	3250 (87.1)	6400 (172)	6700 (180)
	13	0.90	1500 (40.2)	2550 (68.3)	4350 (117)	5950 (159)	10150 (272)	10500 (281)
	25	1.7	2450 (65.7)	4850 (130)	7200 (193)	18100 (485)	19200 (515)	
	60	4.1	4900 (131)	9400 (252)	19600 (525)	22700 (608)		
	100	6.9	7500 (201)	17400 (466)	13800 (370)			
	125	8.6	9150 (245)	5500 (147)[1]				

P212 Flow Capacities in SCFH (Nm³/h) of 0.6 Specific Gravity Natural Gas

Outlet Pressure, Spring Part Number, and Accuracy	Inlet Pressure		NPT 1-1/2 Body Size					
			Orifice Size, Inches (mm)					
	PSIG	BAR	1/4 (6.4)	3/8 (9.5)	1/2 (13)	3/4 (19)	1 (25)	1-3/16 (30)
1 PSIG (0.07 BAR) 655-697-006 ±0.2 PSIG (0.014 BAR)	2	0.14	700 (18.8)	1250 (33.5)	1550 (41.5)	2900 (77.7)	3050 (81.7)	3250 (87.1)
	5	0.34	1050 (28.1)	2150 (57.6)	2800 (75.0)	4800 (129)	5600 (150)	6300 (169)
	10	0.69	1650 (44.2)	3200 (85.8)	4400 (118)	6550 (176)	7800 (209)	8150 (218)
	15	1.0	2000 (53.6)	4100 (110)	5750 (154)	8000 (214)	9400 (252)	10250 (275)
	20	1.4	2300 (61.6)	4750 (127)	6100 (163)	8700 (233)	10950 (293)	
	25	1.7	2600 (69.7)	5500 (147)	8200 (220)	9950 (267)	11550 (310)	
	30	2.1	2900 (77.7)	6250 (168)	8350 (224)	10800 (289)	12250 (328)	
	40	2.8	3600 (96.5)	7500 (201)	9350 (251)	10850 (291)		
	45	3.1	3900 (105)	8400 (225)	10350 (277)	11000 (295)		
	50	3.5	4250 (114)	8900 (239)	10950 (293)	11050 (296)		
	60	4.1	4950 (133)	10000 (268)	11000 (295)	11400 (306)		
	80	5.5	6150 (165)	11150 (299)	11350 (304)			
	100	6.9	7500 (201)	12000 (322)	12000 (322)			
	125	8.6	9150 (245)	12000 (322)				
1 PSIG (0.07 BAR) 655-697-006 ± 1% ABS ±0.16 psia (0.011 BAR)	2	0.14	650 (17.4)	1050 (28.1)	1350 (36.2)	2450 (65.7)	2700 (72.4)	3000 (80.4)
	5	0.34	1050 (28.1)	2100 (56.3)	2700 (72.4)	3800 (102)	4700 (126)	5200 (139)
	10	0.69	1500 (40.2)	2800 (75.0)	3700 (99.2)	5600 (150)	7000 (188)	7300 (196)
	15	1.0	1950 (52.3)	3750 (101)	4900 (131)	6900 (185)	8500 (228)	8750 (235)
	20	1.4	2200 (58.9)	4600 (123)	5800 (155)	8150 (218)	10350 (277)	
	25	1.7	2500 (67.0)	5000 (134)	7250 (194)	9050 (243)	10850 (291)	
	30	2.1	2800 (75.0)	6000 (161)	8200 (220)	9400 (252)	11000 (295)	
	40	2.8	3550 (95.1)	7350 (197)	9100 (244)	9500 (255)		
	45	3.1	3900 (105)	8250 (221)	9650 (259)	10100 (271)		
	50	3.5	4050 (109)	8450 (226)	10300 (276)	10300 (276)		
	60	4.1	4800 (129)	9050 (243)	10450 (280)	10550 (283)		
	80	5.5	5900 (158)	11000 (295)	11100 (297)			
	10	6.9	7400 (198)	11150 (299)	11500 (299)			
	125	8.6	9000 (241)	11750 (315)				
1 PSIG (0.07 BAR) 655-697-006 ± 2% ABS ±0.31 psia (0.021 BAR)	2	0.14	750 (20.1)	1450 (38.9)	2100 (56.3)	3700 (99.2)	4650 (125)	5350 (143)
	5	0.34	1250 (33.5)	2500 (67.0)	3550 (95.1)	6050 (162)	7900 (212)	7900 (212)
	10	0.69	1750 (46.9)	3450 (92.5)	5100 (137)	8550 (229)	9550 (256)	10100 (271)
	15	1.0	2050 (54.9)	4350 (117)	6700 (180)	9400 (252)	11250 (302)	11400 (306)
	20	1.4	2500 (67.0)	5150 (138)	8100 (217)	10500 (281)	12200 (327)	
	25	1.7	2700 (72.4)	5800 (155)	10100 (271)	11550 (310)	12600 (338)	
	30	2.1	3050 (81.7)	6650 (178)	10550 (283)	12350 (331)	13100 (351)	
	40	2.8	3700 (99.2)	7950 (212)	10550 (283)	12350 (331)		
	45	3.1	4100 (110)	8800 (236)	11800 (316)	12700 (340)		
	50	3.5	4550 (122)	9250 (248)	12000 (322)	13000 (348)		
	60	4.1	5000 (134)	10900 (292)	12600 (338)	13000 (348)		
	80	5.5	6450 (173)	12550 (336)	13000 (348)			
	10	6.9	7950 (213)	12900 (346)	13450 (360)			
	125	8.6	9450 (253)	13450 (360)				

P212H Flow Capacities in SCFH (Nm³/h) of 0.6 Specific Gravity Natural Gas NPT 1-1/2 Body Size

1 PSIG (0.07 BAR) 655-697-007 ±0.2 PSIG (0.014 BAR)	2	0.14	500 (13.4)	750 (20.1)	1750 (46.9)	2250 (60.3)	2400 (64.3)	2850 (76.4)
	5	0.34	1100 (29.5)	1800 (48.2)	2300 (61.6)	3400 (91.1)	4850 (130)	5350 (143)
	10	0.69	1600 (42.9)	3200 (85.8)	4600 (123)	7250 (194)	8800 (236)	8800 (236)
	30	2.1	2800 (75.0)	6300 (169)	7800 (209)	10400 (279)	11250 (302)	
	60	4.1	4900 (131)	9600 (257)	9650 (259)	11000 (295)		
	100	6.9	7300 (196)	11200 (300)	11950 (320)			
	125	8.6	9100 (244)	10550 (283)[1]				

1. Limited due to boost

- Shaded areas show where maximum operating inlet pressure for a given port diameter is exceeded.

P212 Flow Capacities in SCFH (Nm³/h) of 0.6 Specific Gravity Natural Gas

Outlet Pressure, Spring Part Number, and Accuracy	Inlet Pressure		NPT 2 (DN 50) Body Size					
			Orifice Size, Inches (mm)					
	PSIG	BAR	1/4 (6.4)	3/8 (9.5)	1/2 (13)	3/4 (19)	1 (25)	1-3/16 (30)
1 PSIG (0.07 BAR) 655-697-006 ±0.2 PSIG (0.014 BAR)	2	0.14	650 (17.4)	1200 (32.2)	2200 (58.9)	3200 (85.8)	3600 (96.5)	4500 (121)
	5	0.34	1100 (25.5)	2300 (61.6)	3200 (85.8)	4800 (129)	7700 (206)	10000 (268)
	10	0.69	1600 (42.9)	3000 (80.4)	4300 (115)	11400 (306)	15200 (407)	16300 (437)
	15	1.0	1900 (50.9)	4000 (107)	6900 (185)	15600 (418)	20800 (557)	22300 (598)
	20	1.4	2300 (61.6)	4900 (131)	9100 (244)	19000 (509)	24000 (643)	
	25	1.7	2600 (69.7)	5600 (150)	10500 (281)	21700 (582)	27400 (734)	
	30	2.1	2900 (77.7)	6500 (174)	11800 (316)	25300 (678)	32800 (879)	
	40	2.8	3700 (99.2)	8000 (214)	14500 (389)	27000 (724)		
	45	3.1	4000 (107)	8800 (236)	15800 (423)	27000 (724)		
	50	3.5	4300 (115)	9300 (249)	16600 (445)	28000 (750)		
	60	4.1	4900 (131)	11300 (303)	19500 (523)	31600 (847)		
	80	5.5	6300 (169)	14200 (381)	24000 (643)			
	100	6.9	7700 (206)	16700 (448)	29500 (791)			
	125	8.6	9600 (257)	20200 (541)				
1 PSIG (0.07 BAR) 655-697-006 ± 1% ABS ±0.16 psia (0.011 BAR)	2	0.14	570 (15.3)	1100 (29.5)	2000 (53.6)	2750 (73.7)	3100 (83.1)	4000 (107)
	5	0.34	1050 (28.1)	2200 (58.9)	2750 (73.7)	4100 (110)	6250 (168)	9000 (241)
	10	0.69	1500 (40.2)	2500 (67.0)	4050 (109)	8500 (228)	13250 (355)	13700 (367)
	15	1.0	1900 (50.9)	3450 (92.5)	5800 (155)	15500 (415)	16000 (429)	16300 (437)
	20	1.4	2300 (61.6)	4800 (129)	7700 (206)	18300 (490)	20850 (559)	
	25	1.7	2500 (67.0)	5600 (150)	10400 (279)	21500 (576)	22800 (611)	
	30	2.1	2900 (77.7)	6350 (170)	11950 (320)	23800 (638)	24300 (651)	
	40	2.8	3650 (97.8)	7850 (210)	14550 (390)	24300 (651)		
	45	3.1	3850 (103)	8400 (225)	15600 (418)	25400 (681)		
	50	3.5	4250 (114)	9350 (251)	16700 (448)	26000 ()697		
	60	4.1	4900 (131)	11200 (300)	19400 (520)	32000 (858)		
	80	5.5	6200 (166)	14250 (382)	24600 (659)			
	10	6.9	7400 (198)	16750 (449)	29000 (777)			
	125	8.6	9350 (251)	20200 (541)				
1 PSIG (0.07 BAR) 655-697-006 ± 2% ABS ±0.31 psia (0.021 BAR)	2	0.14	700 (18.8)	1450 (38.9)	2450 (65.7)	4100 (110)	5600 (150)	7900 (212)
	5	0.34	1150 (30.8)	2550 (68.3)	4000 (107)	8000 (214)	11700 (314)	14300 (383)
	10	0.69	1800 (48.2)	3550 (95.1)	6200 (166)	12300 (330)	18400 (493)	20000 (536)
	15	1.0	2050 (54.9)	4450 (119)	7850 (210)	15900 (426)	22000 (590)	24600 (659)
	20	1.4	2400 (64.3)	5250 (141)	9100 (244)	19200 (515)	25800 (691)	
	25	1.7	2750 (73.7)	5900 (158)	10300 (276)	21800 (584)	31200 (836)	
	30	2.1	3150 (84.4)	6550 (176)	11800 (316)	26200 (702)	35000 (938)	
	40	2.8	3750 (101)	8200 (220)	14300 (383)	30500 (817)		
	45	3.1	4050 (109)	8800 (236)	15600 (418)	28100 (753)		
	50	3.5	4400 (118)	9300 (249)	16700 (448)	33900 (909)		
	60	4.1	5050 (135)	10850 (291)	19500 (523)	34200 (917)		
	80	5.5	6350 (170)	13600 (364)	24600 (659)			
	10	6.9	7850 (210)	17000 (456)	30200 (809)			
	125	8.6	9400 (252)	20500 (549)				

P212H Flow Capacities in SCFH (Nm³/h) of 0.6 Specific Gravity Natural Gas NPT 2 (DN 50) Body Size

1 PSIG (0.07 BAR) 655-697-007 ±0.2 PSIG (0.014 BAR)	2	0.14	500 (13.4)	1050 (28.1)	1400 (37.5)	2200 (58.9)	2900 (77.7)	3700 (99.2)
	5	0.34	1100 (29.5)	2000 (53.6)	2200 (58.9)	4500 (121)	6600 (177)	7000 (188)
	10	0.69	1600 (42.9)	3500 (93.8)	5700 (153)	9700 (260)	13000 (348)	13300 (356)
	30	2.1	2800 (75.0)	6200 (166)	11700 (314)	20000 (536)	23000 (616)	
	60	4.1	4900 (131)	10900 (292)	19300 (517)	20600 (552)		
	100	6.9	7500 (201)	17300 (464)	23900 (641)			
	125	8.6	9000 (241)	19900 (533)				

1. Limited due to boost

- Shaded areas show where maximum operating inlet pressure for a given port diameter is exceeded.

P212H Flow Capacities in SCFH (Nm³/h) of 0.6 Specific Gravity Natural Gas

Outlet Pressure, Spring Part Number, and Accuracy	Inlet Pressure		NPT 1-1/2 Body Size					
			Orifice Size, Inches (mm)					
	PSIG	BAR	1/4 (6.4)	3/8 (9.5)	1/2 (13)	3/4 (19)	1 (25)	1-3/16 (30)
2 PSIG (0.14 BAR) 655-697-007 ±0.2 PSIG (0.014 BAR)	5	0.34	850 (22.8)	1600 (42.9)	1650 (44.2)	2400 (64.3)	2450 (65.7)	3900 (105)
	10	0.69	1450 (38.9)	2050 (54.9)	3250 (87.1)	5400 (145)	5750 (154)	6650 (178)
	15	1.0	1650 (44.2)	3000 (80.4)	4300 (115)	7000 (188)	8200 (220)	8200 (220)
	20	1.4	2050 (54.9)	3850 (103)	5650 (151)	7500 (201)	9050 (243)	
	25	1.7	2500 (67.0)	4600 (123)	6500 (174)	9600 (257)	9700 (260)	
	30	2.1	2750 (73.7)	5650 (151)	6500 (174)	9600 (257)	10850 (291)	
	40	2.8	3500 (93.8)	7000 (188)	8400 (225)	10150 (272)		
	45	3.1	3750 (101)	7800 (209)	9150 (245)	10500 (281)		
	50	3.5	4250 (114)	8500 (228)	9600 (257)	10500 (281)		
	60	4.1	4850 (130)	8800 (236)	9700 (260)	11400 (306)		
	80	5.5	6150 (165)	10000 (268)	11250 (302)			
	100	6.9	7600 (204)	10800 (289)	11250 (302)			
	125	8.6	9300 (249)	12200 (327)				
2 PSIG (0.14 BAR) 655-697-007 ±0.4 PSIG (0.028 BAR)	5	0.34	1100 (29.5)	2200 (58.9)	2800 (75.0)	4550 (122)	5600 (150)	6550 (176)
	10	0.69	1750 (46.9)	3150 (84.4)	4600 (123)	7550 (202)	9050 (243)	10150 (272)
	15	1.0	2000 (53.6)	4200 (113)	6400 (172)	10050 (269)	11000 (295)	11200 (300)
	20	1.4	2400 (64.3)	5000 (134)	7550 (202)	11700 (314)	12200 (327)	
	25	1.7	2700 (72.4)	5750 (154)	9600 (257)	11900 (319)	12950 (347)	
	30	2.1	3100 (83.1)	6700 (180)	9600 (257)	11900 (319)	13300 (356)	
	40	2.8	3750 (101)	7950 (213)	10750 (288)	13000 (348)		
	45	3.1	4100 (110)	8750 (235)	10750 (288)	13000 (348)		
	50	3.5	4550 (122)	9550 (256)	12700 (340)	13000 (348)		
	60	4.1	5150 (138)	11250 (302)	13300 (356)	14400 (386)		
	80	5.5	6450 (173)	12750 (342)	13300 (356)			
	100	6.9	7750 (208)	14450 (387)	13300 (356)			
	125	8.6	9400 (252)	14600 (391)				
2 PSIG (0.14 BAR) 655-697-007 ± 1% ABS ±0.17 psia (0.012 BAR)	5	0.34	850 (22.8)	1400 (37.5)	1450 (38.9)	2250 (60.3)	2450 (65.7)	3300 (88.4)
	10	0.69	1400 (37.5)	1650 (44.2)	2550 (68.3)	4350 (117)	5250 (141)	5600 (150)
	15	1.0	1500 (40.2)	2700 (72.4)	3800 (102)	6000 (161)	5400 (145)	8000 (214)
	20	1.4	2000 (53.6)	3600 (96.5)	5200 (139)	7200 (193)	8200 (220)	
	25	1.7	2400 (64.3)	4500 (121)	6400 (172)	9000 (241)	9550 (256)	
	30	2.1	2800 (75.0)	5600 (150)	7500 (201)	10000 (268)	10400 (279)	
	40	2.8	3600 (96.5)	7800 (209)	9200 (247)	10150 (272)		
	45	3.1	3900 (105)	8400 (225)	9800 (263)	10900 (292)		
	50	3.5	4300 (115)	9100 (244)	10300 (276)	10600 (284)		
	60	4.1	5000 (134)	10200 (273)	11400 (306)	11300 (303)		
	80	5.5	6400 (172)	12000 (322)	10300 (276)(1)			
	100	6.9	7900 (212)	13000 (348)	11150 (299)(1)			
	125	8.6	9600 (257)	11950 (320)(1)				
2 PSIG (0.14 BAR) 655-697-007 ± 2% ABS ±0.33 psia (0.023 BAR)	5	0.34	1050 (28.1)	2100 (56.3)	2500 (67.0)	4100 (110)	5200 (139)	6250 (168)
	10	0.69	1650 (44.2)	3050 (81.7)	4200 (113)	6400 (172)	8350 (224)	8850 (237)
	15	1.0	1900 (50.9)	4200 (113)	6200 (166)	8800 (236)	10500 (281)	10750 (288)
	20	1.4	2200 (58.9)	5100 (137)	7600 (204)	10300 (276)	12000 (322)	
	25	1.7	2500 (67.0)	5800 (155)	8700 (233)	11800 (316)	12050 (323)	
	30	2.1	3000 (80.4)	6500 (174)	9600 (257)	12600 (338)	12700 (340)	
	40	2.8	3600 (96.5)	8100 (217)	11500 (308)	12700 (340)		
	45	3.1	3900 (105)	8800 (236)	12000 (322)	12800 (343)		
	50	3.5	4300 (115)	9700 (260)	12600 (338)	12900 (346)		
	60	4.1	5000 (134)	11300 (303)	13600 (364)	13700 (367)		
	80	5.5	6400 (172)	14200 (381)	12650 (339)			
	100	6.9	7900 (212)	15500 (415)	12950 (347)			
	125	8.6	9600 (257)	14200 (381)(1)				

1. Limited due to boost

- Shaded areas show where maximum operating inlet pressure for a given port diameter is exceeded.

P212H Flow Capacities in SCFH (Nm³/h) of 0.6 Specific Gravity Natural Gas

Outlet Pressure, Spring Part Number, and Accuracy	Inlet Pressure		NPT 2 (DN 50) Body Size					
			Orifice Size, Inches (mm)					
	PSIG	BAR	1/4 (6.4)	3/8 (9.5)	1/2 (13)	3/4 (19)	1 (25)	1-3/16 (30)
2 PSIG (0.14 BAR) 655-697-007 ±0.2 PSIG (0.014 BAR)	5	0.34	850 (22.8)	1800 (48.2)	1800 (48.2)	2950 (79.1)	4250 (114)	5200 (139)
	10	0.69	1350 (36.2)	1900 (50.9)	3000 (80.4)	5200 (139)	6600 (177)	7800 (209)
	15	1.0	1700 (45.6)	2800 (75.0)	3700 (99.2)	6900 (185)	7200 (193)	9500 (255)
	20	1.4	2000 (53.6)	3800 (102)	5300 (142)	9000 (241)	9800 (263)	
	25	1.7	2450 (65.7)	4500 (121)	6800 (182)	12500 (335)	14200 (381)	
	30	2.1	2650 (71.0)	5200 (139)	7500 (201)	16000 (429)	16100 (431)	
	40	2.8	3400 (91.1)	7400 (198)	13200 (354)	21600 (579)		
	45	3.1	3600 (96.1)	8000 (214)	15500 (415)	21600 (579)		
	50	3.5	4000 (107)	8500 (228)	16700 (448)	21900 (587)		
	60	4.1	4600 (123)	10700 (287)	19200 (515)	18800 (504)[1]		
	80	5.5	5800 (155)	13100 (351)	24800 (665)			
	100	6.9	7100 (190)	16200 (434)	25600 (686)			
	125	8.6	9000 (241)	19900 (533)				
2 PSIG (0.14 BAR) 655-697-007 ±0.4 PSIG (0.028 BAR)	5	0.34	1100 (29.5)	2250 (60.3)	3200 (85.8)	5500 (147)	7800 (209)	10100 (271)
	10	0.69	1600 (42.9)	3250 (87.1)	5400 (145)	10000 (268)	14100 (378)	15100 (405)
	15	1.0	2000 (53.6)	4150 (111)	7200 (193)	14400 (386)	18600 (498)	22100 (592)
	20	1.4	2300 (61.6)	4950 (133)	9000 (241)	17500 (469)	24000 (643)	
	25	1.7	2650 (71.0)	5800 (155)	10200 (273)	20700 (555)	28000 (750)	
	30	2.1	3100 (83.1)	6600 (177)	11800 (316)	24900 (667)	28500 (764)	
	40	2.8	3600 (96.5)	8100 (217)	14600 (391)	28000 (750)		
	45	3.1	4100 (110)	8850 (237)	15800 (423)	29000 (777)		
	50	3.5	4400 (118)	9850 (264)	17200 (461)	29200 (783)		
	60	4.1	4900 (131)	11300 (303)	19500 (523)	29300 (785)		
	80	5.5	6400 (172)	14300 (383)	24500 (657)			
	100	6.9	7600 (204)	17200 (461)	29700 (796)			
	125	8.6	9400 (252)	20500 (549)				
2 PSIG (0.14 BAR) 655-697-007 ± 1% ABS ±0.17 psia (0.012 BAR)	5	0.34	750 (20.1)	1600 (42.9)	1600 (42.9)	2400 (64.3)	3000 (80.4)	4100 (110)
	10	0.69	1250 (33.5)	1600 (42.9)	2550 (68.3)	4250 (114)	5000 (134)	6100 (163)
	15	1.0	1600 (42.9)	2700 (72.4)	3800 (102)	5200 (139)	6900 (185)	7600 (204)
	20	1.4	2000 (53.6)	3600 (96.5)	5200 (139)	6900 (185)	9400 (252)	
	25	1.7	2450 (65.7)	4400 (118)	7500 (201)	9600 (257)	10650 (285)	
	30	2.1	2800 (75.0)	5200 (139)	8600 (230)	11800 (316)	16100 (431)	
	40	2.8	3700 (99.2)	7500 (201)	12200 (327)	16200 (434)		
	45	3.1	4100 (110)	8400 (225)	15200 (407)	18350 (492)		
	50	3.5	4400 (118)	9000 (241)	16900 (453)	21000 (563)		
	60	4.1	5100 (137)	11000 (295)	20800 (557)	21000 (563)		
	80	5.5	6500 (174)	14600 (391)	24800 (665)			
	100	6.9	8000 (214)	18000 (482)	29300 (785)			
	125	8.6	9800 (263)	20500 (549)				
2 PSIG (0.14 BAR) 655-697-007 ± 2% ABS ±0.33 psia (0.023 BAR)	5	0.34	1000 (26.8)	2150 (57.6)	2750 (73.7)	5000 (134)	6200 (166)	7900 (212)
	10	0.69	1550 (41.5)	3050 (81.7)	5000 (134)	8600 (230)	12750 (342)	13800 (370)
	15	1.0	1900 (50.9)	4200 (113)	7200 (193)	11000 (295)	11750 (315)	21700 (582)
	20	1.4	2300 (61.6)	5100 (137)	9200 (247)	14200 (381)	16000 (429)	
	25	1.7	2600 (69.7)	5900 (158)	10700 (287)	16400 (440)	25400 (681)	
	30	2.1	3000 (80.4)	6600 (177)	12100 (324)	19700 (528)	27900 (748)	
	40	2.8	3700 (99.2)	8200 (220)	12200 (327)	27200 (729)		
	45	3.1	4100 (110)	9000 (241)	15200 (407)	27200 (729)		
	50	3.5	4400 (118)	9700 (260)	16900 (453)	27400 (734)		
	60	4.1	5100 (137)	11300 (303)	20800 (557)	27400 (734)		
	80	5.5	6500 (174)	14600 (391)	24500 (657)			
	100	6.9	8000 (214)	18000 (482)	29600 (793)			
	125	8.6	9800 (263)	20500 (549)				

1. Limited due to boost

- Shaded areas show where maximum operating inlet pressure for a given port diameter is exceeded.

P212H Flow Capacities in SCFH (Nm³/h) of 0.6 Specific Gravity Natural Gas

Outlet Pressure, Spring Part Number, and Accuracy	Inlet Pressure		NPT 1-1/2 Body Size					
			Orifice Size, Inches (mm)					
	PSIG	BAR	1/4 (6.4)	3/8 (9.5)	1/2 (13)	3/4 (19)	1 (25)	1-3/16 (30)
3 PSIG (0.21 BAR) 655-697-008 ±0.3 PSIG (0.021 BAR)	5	0.34	800 (21.4)	1350 (36.2)	1650 (44.2)	2500 (67.0)	2500 (67.0)	3850 (103)
	10	0.69	1200 (32.2)	1800 (48.2)	2650 (71.0)	4600 (123)	6050 (162)	6600 (177)
	15	1.0	1650 (44.2)	2300 (61.6)	3750 (101)	5600 (174)	9200 (247)	8200 (220)
	20	1.4	1950 (52.3)	3500 (93.8)	5000 (134)	8350 (224)	9200 (247)	
	25	1.7	2150 (57.6)	4400 (118)	6500 (174)	8150 (218)	10050 (269)	
	30	2.1	2700 (72.4)	5600 (150)	6700 (180)	10050 (269)	11250 (302)	
	40	2.8	3300 (88.4)	6900 (185)	7900 (212)	10300 (275)		
	45	3.1	3550 (95.1)	7000 (188)	8650 (232)	11000 (295)		
	50	3.5	4050 (109)	7800 (209)	9700 (260)	11000 (295)		
	60	4.1	4250 (114)	8200 (220)	9900 (265)	11450 (307)		
	80	5.5	5950 (159)	10000 (268)	11600 (311)			
	100	6.9	7450 (200)	11750 (315)	11900 (319)			
	125	8.6	8800 (236)	12200 (327)				
3 PSIG (0.21 BAR) 655-697-008 ±0.6 PSIG (0.041 BAR)	5	0.34	1100 (29.5)	1950 (52.3)	2800 (75.0)	4250 (114)	5400 (145)	7200 (193)
	10	0.69	1650 (44.2)	3100 (83.1)	4650 (125)	7750 (208)	8700 (233)	9100 (244)
	15	1.0	2050 (54.9)	4100 (110)	5950 (159)	9550 (256)	11150 (299)	11800 (316)
	20	1.4	2400 (64.3)	4900 (131)	7800 (209)	10650 (285)	12350 (331)	
	25	1.7	2600 (69.7)	5750 (154)	8700 (233)	11950 (320)	14050 (377)	
	30	2.1	3100 (83.1)	6550 (176)	10250 (275)	12050 (323)	14400 (386)	
	40	2.8	3150 (84.4)	7850 (210)	11300 (303)	13800 (370)		
	45	3.1	4150 (111)	8400 (225)	12450 (334)	14150 (379)		
	50	3.5	4400 (118)	9300 (249)	12450 (334)	14150 (379)		
	60	4.1	5000 (134)	10700 (287)	13000 (348)	15350 (411)		
	80	5.5	6400 (172)	13050 (350)	16000 (429)			
	100	6.9	7650 (205)	15400 (413)	16050 (430)			
	125	8.6	9200 (247)	16050 (430)				
3 PSIG (0.21 BAR) 655-697-008 ± 1% ABS ±0.18 psia (0.012 BAR)	5	0.34	500 (13.4)	1150 (30.8)	1200 (32.2)	1450 (38.9)	1550 (41.5)	2100 (56.3)
	10	0.69	900 (24.1)	1350 (36.2)	1500 (40.2)	2750 (73.7)	3200 (85.8)	3400 (91.1)
	15	1.0	1200 (32.2)	1700 (45.6)	2200 (58.9)	3900 (105)	4900 (131)	4950 (133)
	20	1.4	1500 (40.2)	2100 (56.3)	2900 (77.7)	5300 (142)	8000 (214)	
	25	1.7	1900 (50.9)	2600 (69.7)	4300 (115)	7400 (198)	9350 (251)	
	30	2.1	2200 (58.9)	3100 (83.1)	5100 (137)	8400 (225)	8650 (232)[1]	
	40	2.8	2900 (77.7)	4800 (129)	8000 (214)	8750 (235)		
	45	3.1	3300 (88.4)	5800 (155)	9300 (249)	9900 (265)		
	50	3.5	3700 (99.2)	6800 (182)	10200 (273)	10600 (284)		
	60	4.1	4400 (118)	8400 (225)	11600 (311)	10700 (287)		
	80	5.5	6300 (169)	10800 (289)	9400 (252)[1]			
	100	6.9	8100 (217)	12100 (324)	11750 (315)			
	125	8.6	10000 (268)	10750 (288)[1]				
3 PSIG (0.21 BAR) 655-697-008 ± 2% ABS ±0.35 psia (0.024 BAR)	5	0.34	900 (24.1)	1450 (38.9)	1800 (48.2)	3000 (80.4)	3000 (80.4)	4650 (125)
	10	0.69	1250 (33.5)	2050 (54.9)	3150 (84.4)	5150 (138)	6450 (173)	6650 (178)
	15	1.0	1800 (48.2)	3100 (83.1)	4400 (118)	7200 (193)	8700 (233)	8700 (233)
	20	1.4	2200 (58.9)	3800 (102)	6100 (163)	8600 (230)	11000 (295)	
	25	1.7	2600 (69.7)	5000 (134)	7600 (204)	9700 (260)	11050 (296)	
	30	2.1	2900 (77.7)	5800 (155)	8700 (233)	11200 (300)	11450 (3070)	
	40	2.8	3600 (96.5)	7800 (209)	10800 (289)	11600 (311)		
	45	3.1	4000 (107)	8400 (225)	11600 (311)	11600 (311)		
	50	3.5	4600 (123)	9400 (252)	12400 (332)	11750 (315)		
	60	4.1	5100 (137)	10600 (284)	13800 (370)	13250 (355)		
	80	5.5	6500 (174)	12700 (340)	12600 (338)[1]			
	100	6.9	8100 (217)	14400 (386)	12550 (336)[1]			
	125	8.6	10000 (268)	12500 (335)[1]				

1. Limited due to boost

- Shaded areas show where maximum operating inlet pressure for a given port diameter is exceeded.

P212H Flow Capacities in SCFH (Nm³/h) of 0.6 Specific Gravity Natural Gas

BelGAS

Outlet Pressure, Spring Part Number, and Accuracy	Inlet Pressure		NPT 2 (DN 50) Body Size					
			Orifice Size, Inches (mm)					
	PSIG	BAR	1/4 (6.4)	3/8 (9.5)	1/2 (13)	3/4 (19)	1 (25)	1-3/16 (30)
3 PSIG (0.21 BAR) 655-697-008 ±0.3 PSIG (0.021 BAR)	5	0.34	750 (20.1)	1400 (37.5)	1600 (42.9)	2400 (64.3)	2900 (77.7)	3500 (93.8)
	10	0.69	1200 (32.2)	1900 (50.9)	2750 (73.7)	5000 (134)	6400 (171)	6900 (185)
	15	1.0	1400 (37.5)	2000 (53.6)	3100 (83.1)	5900 (158)	7700 (206)	9800 (263)
	20	1.4	1850 (49.6)	3000 (80.4)	4150 (111)	7700 (206)	7900 (212)	
	25	1.7	2050 (54.9)	3900 (105)	5000 (134)	9100 (244)	9750 (261)	
	30	2.1	2550 (68.3)	4800 (129)	6700 (180)	10100 (271)	17200 (461)	
	40	2.8	3150 (84.4)	6250 (168)	8700 (233)	11600 (311)		
	45	3.1	3400 (91.1)	6750 (181)	9900 (265)	14500 (389)		
	50	3.5	3900 (105)	6750 (181)	12300 (330)	13900 (373)		
	60	4.1	4350 (117)	9400 (252)	12700 (340)	18300 (490)		
	80	5.5	5600 (150)	12700 (340)	18800 (504)			
	100	6.9	7000 (188)	14800 (397)	18800 (504)			
	125	8.6	8650 (232)	18800 (504)				
3 PSIG (0.21 BAR) 655-697-008 ±0.6 PSIG (0.041 BAR)	5	0.34	1100 (29.5)	1950 (52.3)	2550 (68.3)	4700 (126)	6000 (161)	7450 (200)
	10	0.69	1550 (41.5)	3000 (80.4)	4750 (127)	8600 (230)	12200 (327)	15400 (413)
	15	1.0	2050 (54.9)	3850 (103)	5950 (159)	12500 (338)	16200 (434)	20300 (544)
	20	1.4	2400 (64.3)	4850 (130)	8200 (220)	17000 (456)	21800 (584)	
	25	1.7	2800 (75.0)	5750 (154)	9800 (263)	19700 (528)	23000 (616)	
	30	2.1	3150 (84.4)	6450 (173)	11600 (311)	22500 (603)	26500 (710)	
	40	2.8	3650 (97.8)	7850 (210)	14300 (383)	26400 (708)		
	45	3.1	4100 (110)	8900 (239)	15500 (415)	28500 (764)		
	50	3.5	4350 (117)	9450 (253)	17000 (456)	29600 (793)		
	60	4.1	5100 (137)	11100 (297)	19850 (532)	29900 (801)		
	80	5.5	6350 (170)	14350 (385)	25200 (675)			
	100	6.9	7250 (194)	17250 (462)	29400 (788)			
	125	8.6	9400 (252)	21000 (563)				
3 PSIG (0.21 BAR) 655-697-008 ± 1% ABS ±0.18 psia (0.012 BAR)	5	0.34	650 (17.4)	1100 (29.3)	790 (21.2)	1500 (40.2)	1700 (45.6)	1750 (46.9)
	10	0.69	1000 (26.8)	1250 (33.5)	1500 (40.2)	2500 (67.0)	3700 (99.2)	4300 (115)
	15	1.0	1250 (33.5)	1750 (46.9)	2000 (53.6)	2900 (77.7)	3750 (101)	6000 (161)
	20	1.4	1450 (38.9)	2400 (64.3)	2200 (58.9)	4100 (110)	5750 (154)	
	25	1.7	1600 (42.8)	2900 (77.7)	4000 (107)	6900 (185)	6400 (172)	
	30	2.1	1950 (52.3)	3550 (95.1)	4400 (118)	8700 (233)	6700 (180)	
	40	2.8	2700 (72.4)	3850 (103)	5500 (147)	6450 (173)		
	45	3.1	2900 (77.7)	5400 (145)	9000 (241)	8000 (214)		
	50	3.5	3300 (88.4)	5700 (153)	9100 (244)	7900 (212)		
	60	4.1	3900 (105)	7200 (193)	11500 (308)	10300 (276)		
	80	5.5	5250 (141)	9200 (247)	9800 (263)[1]			
	100	6.9	6250 (168)	11300 (303)	10900 (292)[1]			
	125	8.6	7750 (208)	12650 (339)				
3 PSIG (0.21 BAR) 655-697-008 ± 2% ABS ±0.35 psia (0.024 BAR)	5	0.34	800 (21.4)	1450 (38.9)	1700 (45.6)	3150 (84.4)	3250 (87.1)	4000 (107)
	10	0.69	1300 (34.8)	2150 (57.6)	3200 (85.8)	5550 (149)	7200 (193)	9000 (241)
	15	1.0	1550 (41.5)	2850 (76.4)	4050 (109)	6800 (182)	8250 (221)	10800 (289)
	20	1.4	1850 (49.6)	3300 (88.4)	5400 (145)	9300 (249)	10900 (292)	
	25	1.7	2350 (62.9)	4650 (125)	6700 (180)	11250 (302)	15600 (418)	
	30	2.1	2450 (65.7)	5100 (137)	8600 (230)	12250 (328)	17350 (465)	
	40	2.8	3150 (84.4)	6950 (186)	11400 (306)	15150 (406)		
	45	3.1	3400 (91.1)	7650 (205)	11900 (319)	18150 (486)		
	50	3.5	3800 (102)	8500 (228)	14000 (375)	20200 (541)		
	60	4.1	4300 (115)	9850 (264)	19000 (509)	21150 (567)		
	80	5.5	5500 (147)	12600 (338)	23100 (619)			
	100	6.9	6500 (174)	15500 (415)	23650 (634)			
	125	8.6	8100 (217)	20650 (553)				

1. Limited due to boost

- Shaded areas show where maximum operating inlet pressure for a given port diameter is exceeded.

P212H Flow Capacities in SCFH (Nm³/h) of 0.6 Specific Gravity Natural Gas

Outlet Pressure, Spring Part Number, and Accuracy	Inlet Pressure		NPT 1-1/2 Body Size					
			Orifice Size, Inches (mm)					
	PSIG	BAR	1/4 (6.4)	3/8 (9.5)	1/2 (13)	3/4 (19)	1 (25)	1-3/16 (30)
5 PSIG (0.34 BAR) 655-697-009 ±0.5 PSIG (0.034 BAR)	10	0.69	1200 (32.2)	1850 (49.6)	2300 (61.6)	3350 (89.8)	4750 (127)	5500 (147)
	15	1.0	1350 (36.2)	2450 (65.7)	3200 (85.8)	5350 (141)	6650 (178)	7550 (202)
	20	1.4	1850 (49.6)	3200 (85.8)	3900 (105)	6700 (180)	8600 (230)	
	25	1.7	2200 (58.9)	3600 (96.5)	4900 (131)	8250 (221)	10000 (268)	
	30	2.1	2500 (67.0)	5100 (137)	6500 (174)	8800 (236)	11450 (307)	
	40	2.8	3250 (87.1)	6100 (163)	7650 (205)	10650 (285)		
	45	3.1	3650 (97.8)	6950 (186)	8500 (228)	11200 (300)		
	50	3.5	3850 (103)	7550 (202)	9250 (248)	12250 (328)		
	60	4.1	4600 (123)	8550 (229)	10300 (276)	12950 (347)		
	80	5.5	5900 (158)	10550 (283)	12500 (335)			
	100	6.9	7250 (194)	12000 (322)	12550 (336)			
	125	8.6	9000 (241)	13300 (356)				
5 PSIG (0.34 BAR) 655-697-009 ±1 PSIG (0.69 BAR)	10	0.69	1550 (41.5)	2850 (76.4)	4050 (109)	6450 (173)	8450 (226)	9800 (263)
	15	1.0	2000 (53.6)	3850 (103)	5800 (155)	9250 (248)	11150 (299)	12400 (332)
	20	1.4	2450 (65.7)	4750 (127)	7150 (192)	11400 (306)	13250 (355)	
	25	1.7	2800 (75.0)	5700 (153)	8600 (230)	12800 (343)	15250 (409)	
	30	2.1	3100 (83.1)	6400 (172)	10050 (269)	13550 (363)	16800 (450)	
	40	2.8	3700 (99.2)	7850 (210)	12350 (331)	15650 (419)		
	45	3.1	4050 (109)	8600 (230)	13000 (348)	15950 (427)		
	50	3.5	4450 (119)	9400 (252)	13650 (366)	16300 (437)		
	60	4.1	5050 (135)	10700 (287)	15100 (405)	18200 (488)		
	80	5.5	6300 (169)	13400 (359)	17650 (473)			
	100	6.9	7600 (204)	15950 (427)	17650 (473)			
	125	8.6	9200 (247)	17800 (477)				
5 PSIG (0.34 BAR) 655-697-009 ± 1% ABS ±0.20 psia (0.014 BAR)	10	0.69	650 (17.4)	900 (24.1)	1050 (28.1)	1200 (32.2)	1950 (52.3)	2200 (58.9)
	15	1.0	800 (21.4)	1100 (29.5)	1500 (40.2)	2000 (53.6)	2600 (69.7)	3400 (91.1)
	20	1.4	1050 (28.1)	1400 (37.5)	2050 (54.9)	2800 (75.0)	3800 (102)	
	25	1.7	1200 (32.2)	1800 (48.2)	2350 (62.9)	3800 (102)	4400 (118)	
	30	2.1	1450 (38.9)	2200 (58.9)	3000 (80.4)	4900 (131)	5250 (141)	
	40	2.8	1950 (52.3)	2950 (79.1)	4400 (118)	5750 (154)		
	45	3.1	2200 (58.9)	3300 (88.4)	5000 (134)	6550 (176)		
	50	3.5	2400 (64.3)	3850 (103)	6200 (166)	8200 (220)		
	60	4.1	2950 (79.1)	4800 (129)	8400 (225)	9250 (248)		
	80	5.5	4000 (107)	7400 (198)	7800 (209)			
	100	6.9	5300 (142)	10700 (287)	9200 (247)			
	125	8.6	7200 (193)	6150 (165)[1]				
5 PSIG (0.34 BAR) 655-697-009 ± 2% ABS ±0.39 psia (0.028 BAR)	10	0.69	1050 (28.1)	1650 (44.2)	1950 (52.3)	2600 (69.7)	3700 (99.2)	4900 (131)
	15	1.0	1350 (36.2)	2050 (54.9)	2900 (77.7)	4300 (115)	5600 (150)	6350 (170)
	20	1.4	1750 (46.9)	2700 (72.4)	3900 (105)	5800 (155)	7400 (198)	
	25	1.7	2100 (56.3)	3350 (89.8)	4850 (130)	7300 (196)	8750 (235)	
	30	2.1	2400 (64.3)	4050 (109)	5750 (154)	8700 (233)	10150 (272)	
	40	2.8	3200 (85.8)	5300 (142)	8000 (214)	9800 (263)		
	45	3.1	3500 (93.8)	6050 (162)	8950 (240)	10750 (288)		
	50	3.5	3900 (105)	6800 (182)	9800 (263)	11000 (295)		
	60	4.1	4700 (126)	8400 (225)	11500 (308)	12100 (324)		
	80	5.5	6150 (165)	11100 (297)	10300 (276)[1]			
	100	6.9	7900 (212)	13100 (351)	11200 (300)[1]			
	125	8.6	9700 (260)	11950 (320)[1]				

1. Limited due to boost

- Shaded areas show where maximum operating inlet pressure for a given port diameter is exceeded.

P212H Flow Capacities in SCFH (Nm³/h) of 0.6 Specific Gravity Natural Gas

Outlet Pressure, Spring Part Number, and Accuracy	Inlet Pressure		NPT 2 (DN 50) Body Size					
			Orifice Size, Inches (mm)					
	PSIG	BAR	1/4 (6.4)	3/8 (9.5)	1/2 (13)	3/4 (19)	1 (25)	1-3/16 (30)
5 PSIG (0.34 BAR) 655-697-009 ±0.5 PSIG (0.034 BAR)	10	0.69	1200 (32.2)	1700 (45.6)	2200 (58.9)	3750 (101)	5300 (142)	5800 (155)
	15	1.0	1400 (37.5)	2100 (56.3)	2850 (76.4)	5500 (147)	6850 (184)	8150 (218)
	20	1.4	1800 (48.2)	2850 (76.4)	3750 (101)	7000 (188)	7700 (206)	
	25	1.7	2050 (54.9)	3750 (101)	4550 (122)	7900 (212)	9750 (261)	
	30	2.1	2500 (67.0)	4550 (122)	5800 (155)	8500 (228)	10750 (288)	
	40	2.8	3150 (84.4)	5800 (155)	6200 (166)	12000 (322)		
	45	3.1	3500 (93.8)	6200 (166)	7000 (188)	12850 (344)		
	50	3.5	3900 (105)	7000 (188)	7700 (206)	14200 (381)		
	60	4.1	4350 (117)	7700 (206)	10950 (293)	16650 (446)		
	80	5.5	5850 (157)	10950 (293)	13500 (362)			
	100	6.9	7150 (192)	13500 (362)	16400 (440)			
	125	8.6	8900 (239)	16400 (440)				
5 PSIG (0.34 BAR) 655-697-009 ±1 PSIG (0.69 BAR)	10	0.69	1500 (40.2)	2800 (75.0)	4050 (109)	7350 (197)	9400 (252)	12400 (332)
	15	1.0	2050 (54.9)	3950 (106)	5700 (153)	10750 (288)	12950 (347)	17100 (458)
	20	1.4	2400 (64.3)	4750 (127)	7300 (196)	13550 (363)	18450 (494)	
	25	1.7	2750 (73.7)	5450 (146)	9100 (244)	16200 (434)	20400 (547)	
	30	2.1	3100 (83.1)	6500 (174)	10500 (281)	19200 (515)	24700 (662)	
	40	2.8	3750 (101)	7850 (210)	13700 (367)	25250 (677)		
	45	3.1	4050 (109)	8550 (229)	15150 (406)	25700 (689)		
	50	3.5	4400 (118)	9600 (257)	16650 (446)	27950 (749)		
	60	4.1	4950 (133)	10850 (291)	19150 (513)	30550 (819)		
	80	5.5	6450 (173)	14000 (375)	24150 (647)			
	100	6.9	7700 (206)	17000 (456)	29400 (788)			
	125	8.6	9250 (248)	20700 (555)				
5 PSIG (0.34 BAR) 655-697-009 ± 1% ABS ±0.20 psia (0.014 BAR)	10	0.69	500 (13.4)	850 (22.8)	1000 (26.8)	1500 (40.2)	2000 (53.6)	2200 (58.9)
	15	1.0	750 (20.1)	1200 (32.2)	1400 (37.5)	1900 (50.9)	2300 (61.6)	2900 (77.7)
	20	1.4	1000 (26.8)	1550 (41.5)	1900 (50.9)	2700 (72.4)	3000 (80.4)	
	25	1.7	1250 (33.5)	1950 (52.3)	2300 (61.6)	3400 (91.1)	3700 (99.2)	
	30	2.1	1450 (38.9)	2200 (58.9)	2800 (75.0)	4100 (110)	4000 (107)	
	40	2.8	1900 (50.9)	3100 (83.1)	4000 (107)	3300 (88.4)		
	45	3.1	2100 (56.3)	3400 (91.1)	4400 (118)	4600 (123)		
	50	3.5	2400 (64.3)	3800 (102)	5000 (134)	5300 (142)		
	60	4.1	2800 (75.0)	4700 (126)	6600 (177)	7250 (194)		
	80	5.5	3900 (105)	7300 (196)	5050 (135)[1]			
	100	6.9	5000 (134)	9300 (249)	6400 (172)[1]			
	125	8.6	7000 (188)	6000 (161)[1]				
5 PSIG (0.34 BAR) 655-697-009 ± 2% ABS ±0.39 psia (0.028 BAR)	10	0.69	1000 (26.8)	1400 (37.5)	1650 (44.2)	2900 (77.7)	3500 (93.8)	4500 (121)
	15	1.0	1300 (34.8)	2100 (56.3)	2800 (75.0)	3900 (105)	5500 (147)	5850 (157)
	20	1.4	1650 (44.2)	2750 (73.7)	3600 (96.5)	5300 (142)	7400 (198)	
	25	1.7	2050 (54.9)	3400 (91.1)	4400 (118)	6800 (182)	7400 (196)	
	30	2.1	2400 (64.3)	4000 (107)	5500 (147)	7900 (212)	8350 (224)	
	40	2.8	3100 (83.1)	5400 (145)	7200 (193)	9300 (249)		
	45	3.1	3250 (87.1)	6100 (163)	8300 (222)	9850 (264)		
	50	3.5	3850 (103)	6700 (180)	9400 (252)	10650 (285)		
	60	4.1	4450 (119)	8200 (220)	11500 (308)	14550 (390)		
	80	5.5	6100 (163)	11000 (295)	10850 (291)[1]			
	100	6.9	7600 (204)	14000 (375)	11800 (316)			
	125	8.6	9600 (257)	11650 (312)[1]				

1. Limited due to boost

- Shaded areas show where maximum operating inlet pressure for a given port diameter is exceeded.

P212

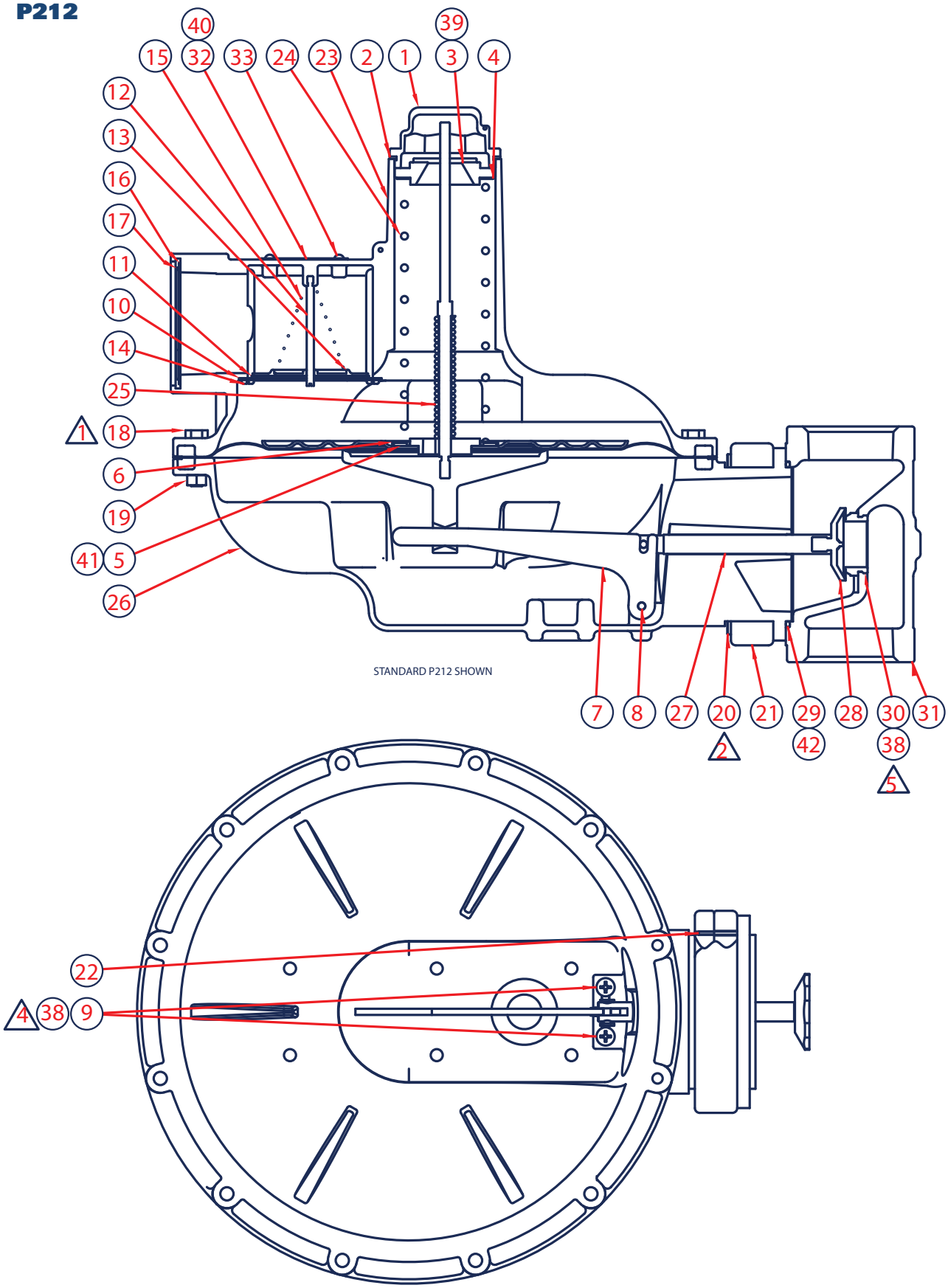
40
39
15
32
33
24
23
2
1
3
4
12
13
16
17
11
10
14
25
1
18
6
19
41
5
26
STANDARD P212 SHOWN
7
8
27
20
21
29
28
30
31
2
42
38
5
22
4
38
9

Item	Description		Part Number
1	Bonnet Cap - Aluminum	1	610-058-000
2	Cap Gasket - Neoprene	1	624-068-000
3	Adjusting Screw	1	648-504-000
4	Thrust Washer	1	662-234-001
5	Roller Bearing	1	602-135-000
6	Bearing Washer	1	662-243-000
7	Lever - Plated Steel	1	730-000-000
8	Lever Pin - Stainless	1	635-064-000
9	Lever Screws - Plated Steel	2	648-503-000
	Vent Assembly Parts		
10	Seat Plate	1	650-203-000
11	Seat Plate Gasket	1	624-109-000
12	Flapper Stem	1	638-092-000
13	Flapper Plate	1	661-009-000
14	Self-tapping Screw	4	648-502-000
15	Port Spring	1	655-789-001
16	Port Screen	1	647-028-000
17	Snap Ring	1	693-035-000
18	Build Screws - Plated Steel	12	648-506-000
19	Build Screw Nuts - Plated Steel	10	634-174-000
20	Union Ring Bolt - Plated Steel	4	648-467-010
21	Union Ring - Aluminum	2	644-067-000
22	Union Ring Spring Pin - Stainless	1	635-086-000
23	Bonnet - Aluminum - **L Only**	1	604-276-000
	Bonnet - Aluminum - **H Only**		800-134-000
24	**Range Springs - Normal (L)**	1	
	2" - 4.5" WC - Brown, Plated Steel		655-697-002
	3.5" - 6.5" WC - Red, Plated Steel		655-697-003
	5"-9" WC - Black, Plated Steel		655-697-004
	6"-14" WC - Purple, Plated Steel		655-697-011
	8.5"-18" WC - Gray, Plated Steel		655-697-005
	14"-30" WC - Dark Green, Plated Steel		655-697-006
	Range Springs - High (H)	1	
	1 - 2 PSI - Dark Blue, Plated Steel		655-789-003
	1.5 - 3.25 PSI - Orange, Plated Steel		655-789-004
	2 - 5 PSI - Yellow, Plated Steel		655-789-005
25	**Diaphragm Assemblies**	1	
	Nitrile - **L Only**		804-298-000
	Nitrile - **H Only**		804-298-002
26	Lower Casing - Aluminum	1	629-260-000

Item	Description		Part Number
27	Valve Stem assembly - Anodized Aluminum	1	827-013-000
28	**Seat Assemblies**		
	Nitrile Seat Disk	1	822-033-000
29	Body/Lower Casing O-ring - Nitrile	1	649-309-012
30	**Orifices**	1	
	1/4" Aluminum		688-016-000
	3/8" Aluminum		688-016-001
	1/2" Aluminum		688-016-002
	3/4" Aluminum		688-016-003
	1" Aluminum		688-016-004
	1-3/16" Aluminum		688-016-005
31	**Bodies**	1	
	1-1/4" NPT - Iron		664-448-006
	1-1/2" NPT - Iron		664-448-002
	2" NPT - Iron		664-448-000
	2" x 1-1/2" - Iron		664-448-004
	2" 125FF - Iron		664-448-008
	1-1/4" NPT - Steel		664-448-007
	1-1/2" NPT - Steel		664-448-003
	2" NPT - Steel		664-448-001
	2" x 1-1/2" - Steel		664-448-005
	1-1/2" 150# RF Steel		664-448-009
	2" 150# RF Steel		664-448-010
32	Name Plate	1	632-526-000
33	Drive Screws	4	648-533-001

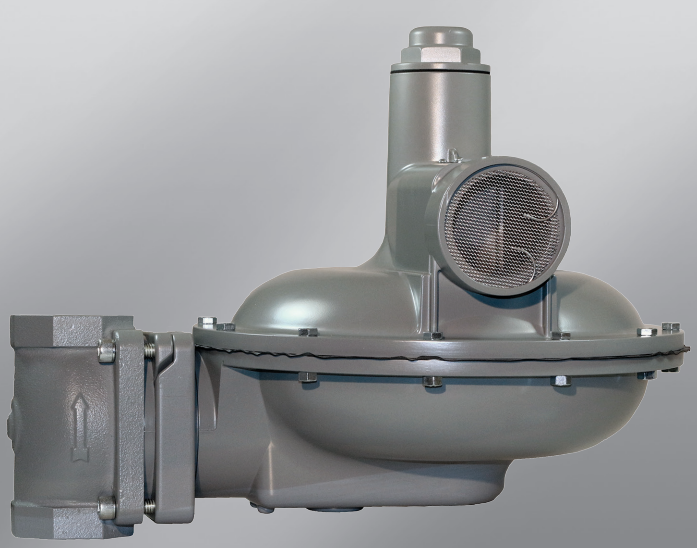

P300 Pressure Regulator

- Minimize Sudden Downstream Load Change
- Wide Pressure Ranges
- P302 has internal relief valve for overpressure protection

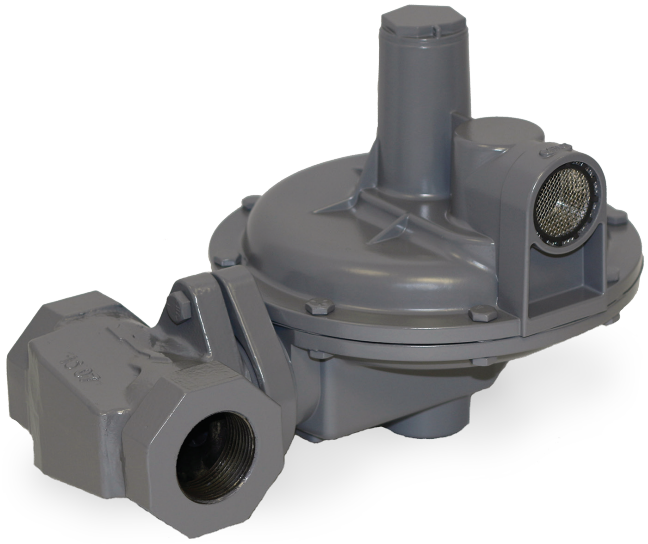

The P300 series pressure regulator is a manual, direct acting, self-operating, spring loaded, adjustable regulator. The P300 series is used in applications where pressure reduction is required. The regulator will reduce the risk of "shock" from abrupt changes of downstream conditions. This can help prevent safety equipment from shutting an operation down.

Applications

- Compressors
- Gas Engines
- Service Regulators

Materials of Construction

Adjusting Screw	Aluminum
Body	Ductile Cast Iron or WCB Steel
Bonnet	Aluminum
Closing Cap	Zinc
Diaphragm	Nitrile
Lower Casing	Aluminum
Molded Seat Assembly	Nitrile
Orifice	Aluminum
Flange	Ductile Iron / WCB Steel

P300 Series Maximum Inlet Pressure

		P301/P302		P310H/P302H	
Orifice Inches	Range	Maximum Inlet Pressure		Maximum Inlet Pressure	
		PSIG	BAR	PSIG	BAR
3/16"	Any	125	8.618	125	8.618
1/4"	Any	60	4.136	125	8.618
3/8"	Any	30	2.068	80	5.515
1/2"	Any	25	1.723	60	4.136
3/4"	Any	15	1.034	40	2.757

Specifications

Maximum Inlet	See Table 1	
Maximum Emergency Outlet	15 PSIG	
Pressure Ranges	See Table 2	
Port Sizes	1.25 NPT	
	1.5 NPT	
	1.5 NPT x 2 NPT	
	2 NPT	
Orifice Sizes	3/16"	
	1/4"	
	3/8"	
	1/2"	
	3/4"	
End Connections	NPT	
	150 RF Flange	Steel Units Only
	125 FF Flange	Iron Units Only
Temperature Range	-20˚F to 180˚F	
	-29˚C to 82˚C	
Approx. Weight	26 lbs. (11.8 kg)	

P300 Series Range Springs

Table 2

Model	Spring Ranges		Spring Color	Part Number
	WC.	mBar		
P301 & P302	3 - 6 WC	9 - 15	Red	655-788-000
	5 - 8.5 WC	12 - 21	Silver	655-788-001
	6 - 14 WC	15 - 35	Blue	655-788-002
	12 - 28 WC	30 - 70	Green	655-788-003
	PSIG	Bar		
P301H & P302H	1 - 2 PSIG	.07 - .14	Black	655-788-004
	1.5 - 3 PSIG	.10 - .21	Olive	655-788-005
	2.5 - 5.5 PSIG	.17 - .38	Yellow	655-788-006
P301H Only	4.5 - 8 PSIG	.31 - .55	Brown	655-788-007

P300 Part Matrix

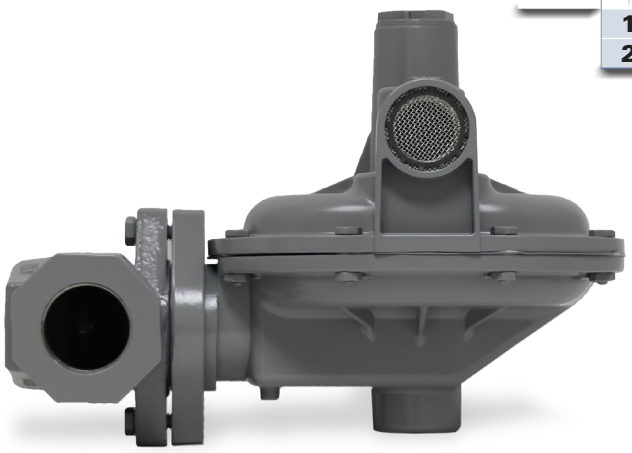

P30											
										Version	
	1									Non-Relieving	
	2									Relieving	
										Configuration	
		0								Normal	
		H								High	
										Port Size	
			12							1.25 NPT	
			14							1.5 NPT	
			15							1.5 x 2 NPT	
			16							2 NPT	
										Spring Range	
										WC / mBAR	
				006						3 - 6" WC / 9 - 15	
				085						5 - 8.5" WC / 12 - 21	
				014						6 - 14" WC / 15 - 35	
				028						12 - 28" WC / 30 - 70	
										H Configuration	
										PSIG / BAR	
				002						1 - 2 PSIG / .07 - .14	
				003						1.5 - 3 PSIG / .10 - .21	
				005						2 - 5.5 PSIG / .17 - .38	
				008						4.5 - 8 PSIG / .31 - .55	301H Only
										Special Construction	
					0					None	
					A					150 RF (2" Steel Only)	
					E					125 FF (2" Iron Only)	
										Orifice	
						3				3/16"	
						4				1/4"	
						6				3/8"	
						8				1/2"	
						B				3/4"	
										Port Orientation	
							1			Up	
							2			Down	
							3			Right (Standard)	
							4			Left	
										Bonnet Orientation	
								C		12 O'clock	
								D		3 O'clock	
								E		6 O'clock	
								F		9 O'clock (Standard)	
										Body Material	
									0	Iron	
									2	Steel (2" Only)	

P300 Regulator Rebuild Kits

	Kit Includes	Part Number
P300 Regulator	Diaphragm, Disk Holder, Cap Gasket, O-Ring	971-300-000

P300 Body Orientation*

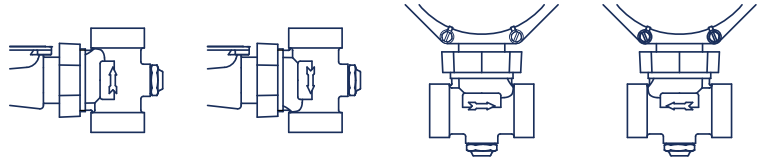

UP 1 | DOWN 2 | RIGHT 3 | LEFT 4

* Port orientation is based on the body's "Out" port location in relation to the top view of the regulator.

P300 Vent Positions

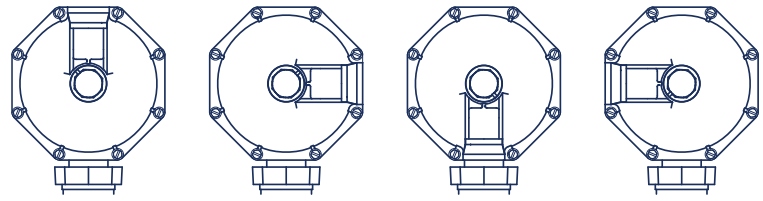

12 C | 3 D | 6 E | 9 F

P300 Dimensions

Body Size	A			A2			B	C	D	
Inches	NPT	125 FF Flange	150 RF Flange	NPT	125 FF Flange	150 RF Flange	NPT	NPT	NPT	125 FF Flange
1.25	4.50			2.31			6.07	9.92	1.51	
1.5	4.50			2.31			6.07	9.92	1.51	
1.5 x 2	6.13			2.87			6.66	10.05	2.15	
2	6.13	10	10	2.87	5.00	5.00	6.66	10.05	2.15	

P300 Head Only

P30						**0**		
							Version	
	1						Non-Relieving	
	2						Relieving	
							Configuration	
		0					Normal	
		H					High	
							Spring Range	
							WC	mBAR
			006				3 - 6" WC	9 - 15
			085				5 - 8.5" WC	12 - 21
			014				6 - 14" WC	15 - 35
			028				12 - 28" WC	30 - 70
							H Version	
							PSIG	BAR
			002				1 - 2 PSIG	.07 - .14
			003				1.5 - 3 PSIG	.10 - .21
			005				2.5 - 5.5 PSIG	.17 - .38
			008				4.5 - 8 PSIG	.31 - .55 301H Only
							Special Construction	
				0			None	
				2			2" with Adapter for 2" BelGAS Body	
							Bonnet Orientation	
					C		12 O'clock	
					D		3 O'clock (Standard)	
					E		6 O'clock	
					F		9 O'clock	

P300 Standard

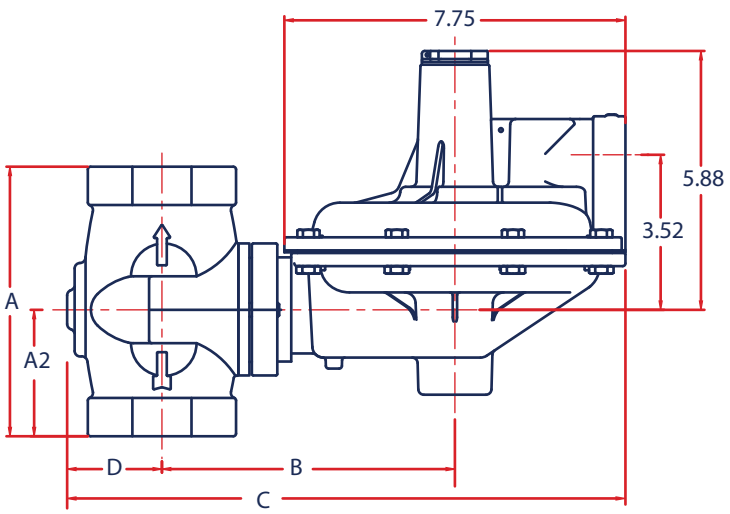

P300 Flanged

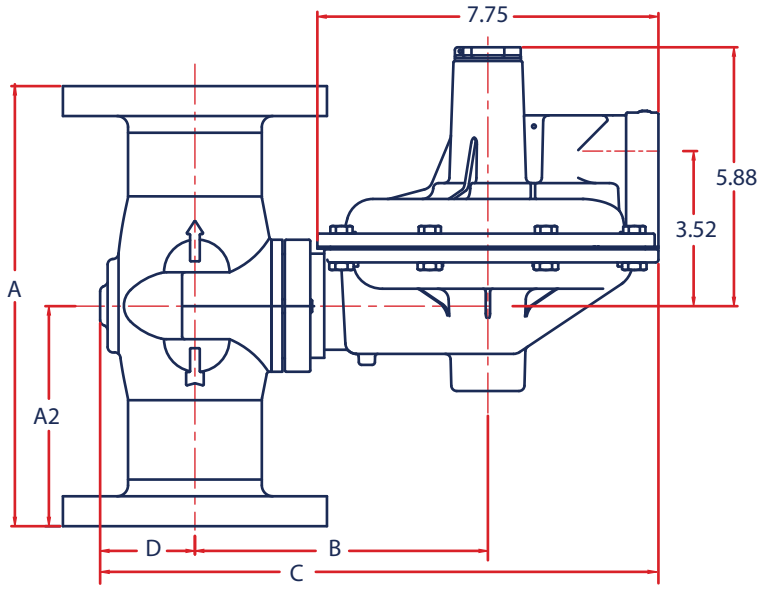

P302 Normal (0) Relief Capacities

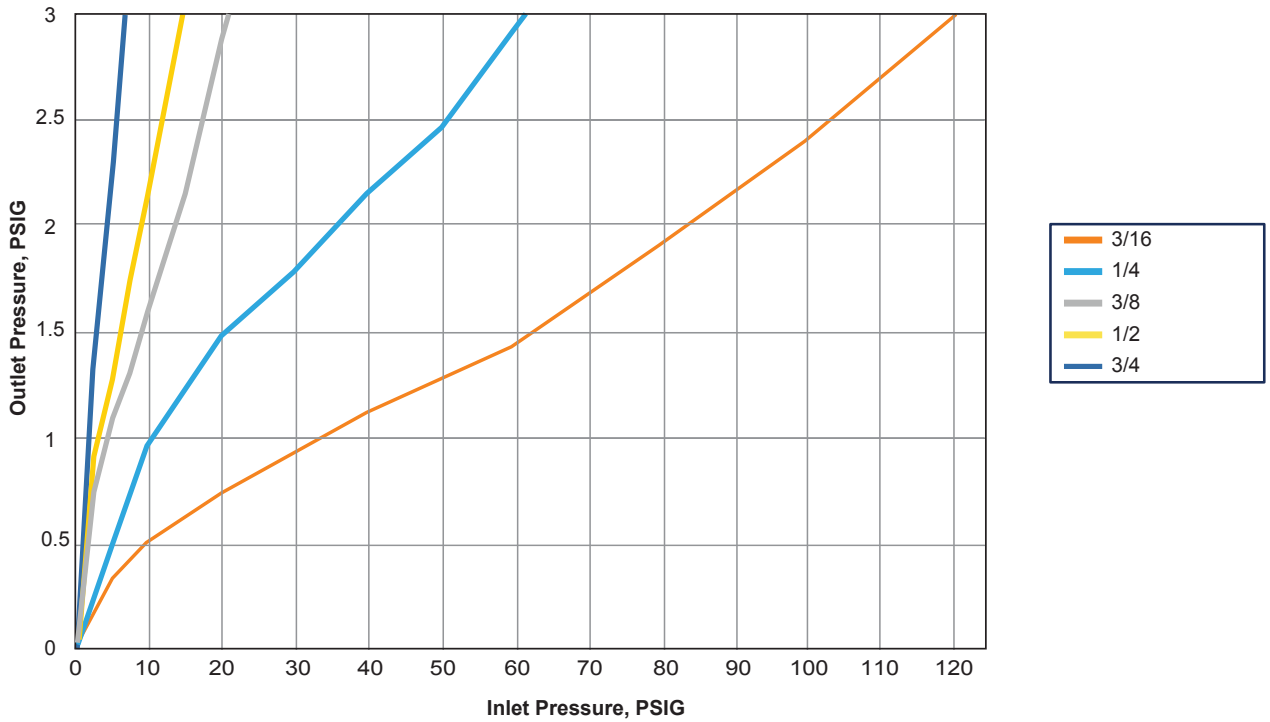

7" Set Outlet Pressure

P302 H Relief Capacities

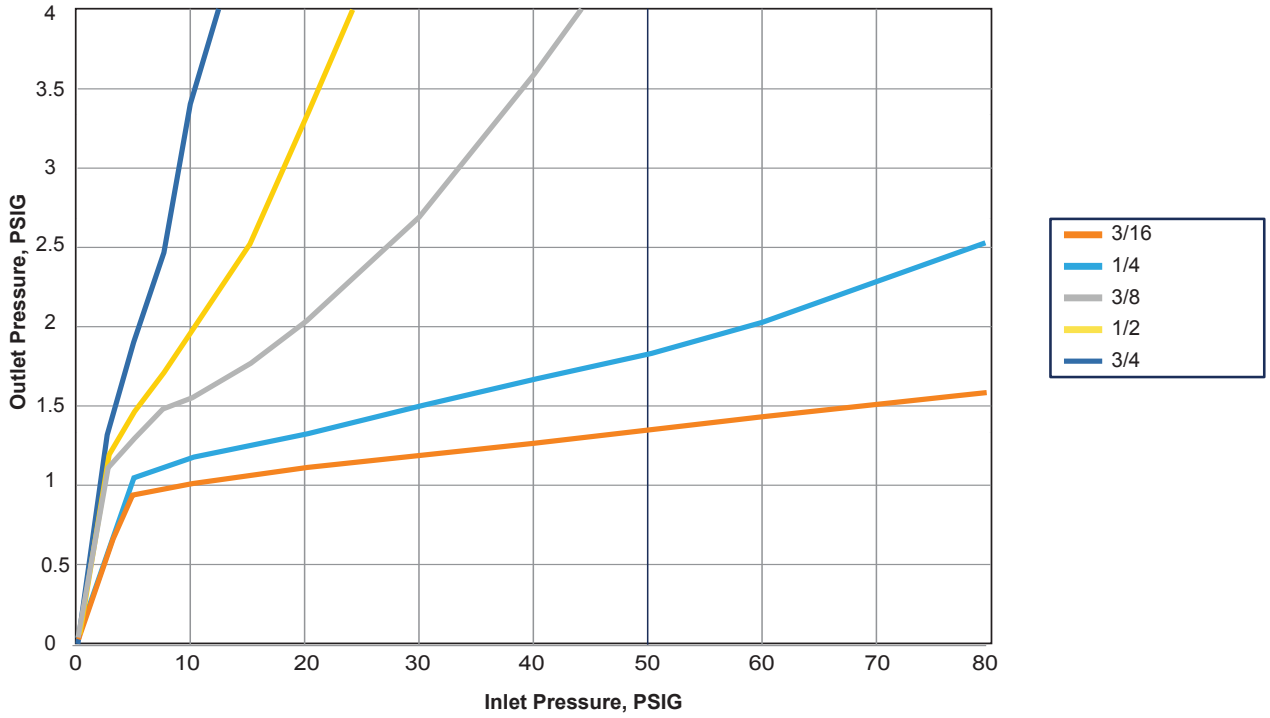

1" PSIG Set Outlet Pressure

P301 & 302 Flow Capacities in SCFH (Nm³/h) of 0.6 Specific Gravity Natural Gas

Outlet Pressure, Spring Part Number, and Accuracy	Inlet Pressure		NPT 1-1/4 (DN32) Body Size				
			Orifice Size, Inches (mm)				
	PSIG	BAR	3/16 (4.8)	1/4 (6.4)	3/8 (9.5)	1/2 (13)	3/4 (19)
5 inches WC (12 mBAR) 655-788-000 1 inch WC (2.5 mBAR) droop	2	0.14			700 (18.8)	1000 (26.8)	1600 (42.9)
	5	0.34		700 (18.8)	1400 (37.5)	1900 (50.9)	2600 (70)
	10	0.69		1200 (32.2)	2300 (61.6)	3000 (80.4)	3500 (93.8)
	15	1.00	1050 (28.1)	1580 (42.30	3000 (80.4)	3500 (93.8)	3500 (93.8)
	25	1.70	1400 (37.5)	2400 (64.3)	3500 (93.8)	3500 (93.8)	
	30	2.10	1550 (41.5)	2700 (72.4)	3500 (93.8)		
	60	4.10	2300 (61.6)	3500 (93.8)			
	80	5.17	3000 (80.4)				
	100	6.90	3200 (85.8)				
	125	8.60	3500 (93.8)				
7 inches WC (17 mBAR) 655-788-001 1 inch WC (2 mBAR) droop 2 inches WC (5 mBAR) boost	2	0.14					1400 (37.5)
	5	0.34			1100 (29.5)	1700 (45.6)	2000 (53.6)
	10	0.69		750 (20.1)	2100 (56.3)	2400 (64.3)	3500 (93.8)
	15	1.00	1000 (26.8)	1050 (28.1)	3000 (80.4)	3500 (93.8)	3500 (93.8)
	25	1.70	1250 (33.5)	1950 (52.3)	3000 (80.4)	3500 (93.8)	
	30	2.10	1500 (40.2)	2550 (68.3)	3500 (93.8)		
	60	4.10	2500 (67.0)	3500 (93.8)			
	80	5.17	2700 (72.4)				
	100	6.90	3500 (93.8)				
	125	8.60	3500 (93.8)				
11 inches WC (27 mBAR) 655-788-002 ± 2 inches WC (5 mBAR)	2	0.14			500 (13.4)	700 (18.8)	1200 (32.2)
	5	0.34			1100 (29.5)	1500 (40.2)	2100 (56.3)
	10	0.69			1750 (46.9)	2500 (67.0)	3500 (93.8)
	15	1.00		1200 (32.2)	2500 (67.0)	3400 (91.1)	3500 (93.8)
	25	1.70		1900 (50.9)	3500 (93.8)	3500 (93.8)	
	30	2.10	1500 (40.2)	2100 (56.3)	3500 (93.8)		
	40	2.80	1900 (50.9)	3200 (85.8)			
	60	4.10	2300 (61.6)	2620 (70.2)			
	80	5.17	2750 (73.7)				
	100	6.90	3400 (91.1)				
	125	8.60	3500 (93.8)				
20 inches WC (50 mBAR) 655-788-003 ± 3 inches WC (7 mBAR)	5	0.34				1000 (26.8)	1600 (42.9)
	10	0.69			1150 (30.8)	1850 (49.6)	2600 (69.7)
	15	1.00			1650 (44.2)	2700 (72.4)	3400 (91.1)
	25	1.70		1150 (30.8)	2700 (72.4)	3500 (93.8)	
	30	2.10	1200 (32.2)	1400 (37.5)	3200 (85.8)		
	40	2.80	1350 (36.2)	2000 (53.6)			
	60	4.10	1900 (50.9)	2900 (77.7)			
	80	5.17	2600 (69.7)				
	100	6.90	3000 (80.4)				
	125	8.60	3500 (93.8)				

1. Limited due to boost

- Shaded areas show where indicated droop would be exceeded regardless of capacity.
- Shaded areas show where maximum operating inlet pressure for a given port diameter is exceeded.

P301 & 302 Flow Capacities in SCFH (Nm³/h) of 0.6 Specific Gravity Natural Gas

Outlet Pressure, Spring Part Number, and Accuracy	Inlet Pressure		NPT 1-1/2 (DN40) & 2" (DN50) Body Size				
			Orifice Size, Inches (mm)				
	PSIG	BAR	3/16 (4.8)	1/4 (6.4)	3/8 (9.5)	1/2 (13)	3/4 (19)
5 inches WC (12 mBAR) 655-788-000 1 inch WC (2.5 mBAR) droop	2	0.14			750 (20.1)	1150 (30.8)	1700 (45.6)
	5	0.34		700 (18.8)	1550 (41.5)	2250 (60.3)	3500 (93.8)
	10	0.69		1400 (37.5)	2600 (69.7)	3500 (93.8)	3500 (93.8)
	15	1.00	1080 (28.9)	1850 (49.6)	3500 (93.8)	3500 (93.8)	3500 (93.8)
	25	1.70	1450 (38.9)	2450 (65.7)	2300 (61.6)	2600 (69.7)	
	30	2.10	1600 (42.9)	2750 (73.7)	1900 (50.9)		
	60	4.10	2600 (69.7)	3500 (93.8)			
	80	5.17	3300 (88.4)				
	100	6.90	3500 (93.8)				
	125	8.60	3500 (93.8)				
7 inches WC (17 mBAR) 655-788-001 1 inch WC (2 mBAR) droop 2 inches WC (5 mBAR) boost	2	0.14					1400 (37.5)
	5	0.34			1200 (26.8)	2000 (53.6)	3200 (85.8)
	10	0.69		1000 (26.8)	2400 (64.3)	3500 (93.8)	3500 (93.8)
	15	1.00	1050 (28.1)	1400 (37.5)	3300 (88.4)	3500 (93.8)	3500 (93.8)
	25	1.70	1400 (37.5)	2400 (64.3)	3500 (93.8)	2600 (69.7)	
	30	2.10	1600 (42.9)	1700 (72.4)	2400 (64.3)		
	60	4.10	2600 (69.7)	3500 (93.8)			
	80	5.17	3300 (88.4)				
	100	6.90	3500 (93.8)				
	125	8.60	3500 (93.8)				
11 inches WC (27 mBAR) 655-788-002 ± 2 inches WC (5 mBAR)	2	0.14			500 (13.4)	800 (21.4)	1250 (33.5)
	5	0.34			1150 (30.8)	1700 (45.6)	2500 (67.0)
	10	0.69			2000 (53.6)	3100 (83.1)	3500 (93.8)
	15	1.00		1250 (33.5)	3000 (80.4)	3500 (93.8)	3500 (93.8)
	25	1.70		195 (52.3)	3500 (93.8)	3500 (93.8)	
	30	2.10	1500 (40.2)	2300 (61.6)	3500 (93.8)		
	40	2.80	1900 (50.9)	3200 (85.8)			
	60	4.10	2650 (71.0)	3500 (93.8)			
	80	5.17	3250 (87.1)				
	100	6.90	3500 (93.8)				
	125	8.60	3500 (93.8)				
20 inches WC (50 mBAR) 655-788-003 ± 3 inches WC (7 mBAR)	5	0.34				1050 (28.1)	1800 (48.2)
	10	0.69			1300 (34.8)	1900 (50.9)	3100 (83.1)
	15	1.00			1900 (50.9)	2850 (76.4)	3500 (93.8)
	25	1.70		1250 (33.5)	3100 (83.1)	3500 (93.8)	
	30	2.10	1300 (34.8)	1600 (42.9)	3500 (93.8)		
	40	2.80	1650 (44.2)	2200 (59.0)			
	60	4.10	2300 (61.6)	3300 (88.4)			
	80	5.17	2800 (75.0)				
	100	6.90	3200 (85.8)				
	125	8.60	3500 (93.8)				

1. Limited due to boost

- Shaded areas show where indicated droop would be exceeded regardless of capacity.
- Shaded areas show where maximum operating inlet pressure for a given port diameter is exceeded.

P301 & 302 Flow Capacities in SCFH (Nm³/h) of 0.6 Specific Gravity Natural Gas

Outlet Pressure, Spring Part Number, and Accuracy	Inlet Pressure		NPT 1-1/4 (DN32), 1-1/2 (DN40) & 2" (DN50) Body Sizes				
			Orifice Size, Inches (mm)				
	PSIG	BAR	3/16 (4.8)	1/4 (6.4)	3/8 (9.5)	1/2 (13)	3/4 (19)
1 PSIG Set (69 mBAR) 655-788-006 10% Droop	2	0.14	193 (5.2)	160 (4.3)	295 (7.9)	400 (10.7)	595 (15.9)
	5	0.34	300 (8.0)	381 (10.2)	440 (11.8)	748 (20.0)	1240 (33.2)
	10	0.69	450 (12.1)	465 (12.5)	690 (18.5)	1420 (38.1)	2200 (59.0)
	15	1.00	555 (14.9)	740 (19.8)	1290 (34.6)	2070 (55.5)	3350 (89.8)
	20	1.40	710 (19.0)	920 (24.7)	1880 (50.4)	2750 (73.7)	4500 (121.0)
	30	2.10	970 (26.0)	1160 (31.1)	3040 (81.5)	4180 (112.0)	5000 (134.0)
	40	2.80	1310 (35.1)	1620 (43.4)	4170 (112.0)	5000 (134.0)	5000 (134.0)
	60	4.10	1750 (46.9)	3300 (88.4)	5000 (134.0)	5000 (134.0)	
	80	5.17	2210 (59.2)	3400 (91.1)	5000 (134.0)		
	100	6.90	3100 (83.1)	3980 (107.0)			
	125	8.60	3760 (101.0)	3290 (88.2)			
3 PSIG Set (207 mBar) 655-788-007 10% Droop	4	0.28	303 (8.2)	207 (5.6)	478 (12.8)	548 (14.7)	1060 (28.4)
	5	0.34	374/10.0)	452 (12.1)	606 (16.2)	905 (24.3)	1290 (34.6)
	10	0.69	515 (13.8)	670 (18.0)	1130 (30.3)	1740 (46.6)	2450 (65.7)
	15	1.00	735 (19.7)	905 (24.3)	1680 (45.0)	2250 (60.3)	3230 (86.6)
	20	1.40	970 (26.0)	1030 (37.6)	2000 (53.6)	2770 (74.2)	4130 (111.0)
	30	2.10	1420 (38.1)	1755 (47.0)	2970 (79.6)	3870 (104.0)	5000 (134.0)
	40	2.80	1700 (45.6)	2200 (59.0)	4030 (108.0)	5000 (134.0)	5000 (134.0)
	60	4.10	2390 (64.1)	3070 (82.3)	5000 (134.0)	5000 (134.0)	
	80	5.17	3030 (81.2)	4000 (107.0)	5000 (134.0)		
	100	6.90	3550 (95.1)	4380 (117.0)			
	125	8.60	4180 (112.0)	4970 (133.0)			
5 PSI Set (345 mBar) 655-788-004 10% Droop	7	0.48					1480 (39.7)
	10	0.69	570 (15.3)	723 (19.4)	1030 (27.6)	1480 (39.7)	2040 (54.7)
	15	1.00	775 (20.8)	1030 (27.6)	1500 (40.2)	2130 (57.1)	3100 (83.1)
	20	1.40	980 (26.3)	1330 (35.6)	1940 (52.0)	2640 (70.8)	4080 (109.0)
	30	2.10	1390 (37.3)	1575 (42.2)	2710 (72.6)	3740 (100.0)	5000 (134.0)
	40	2.80	1740 (46.6)	2200 (59.0)	3480 (93.3)	4970 (133.0)	5000 (134.0)
	60	4.10	2380 (63.8)	3230 (86.60	5000 (134.0)	5000 (134.0)	
	80	5.17	2970 (79.6)	4000 (107.0)	5000 (134.0)		
	100	6.90	3420 (91.7)	4830 (129.0)			
	100	6.90	389 (107.0)	5000 (134.0)			
6 PSI Set (414 mBar) 655-788-005 10% Droop	10	0.69	495 (13.3)	677 (18.1)	905 (24.3)	1360 (36.4)	1940 (52.0)
	15	1.00	735 (19.7)	981 (26.3)	1390 (37.3)	1940 (52.0)	2840 (76.1)
	20	1.40	970 (26.0)	1225 (32.8)	1740 (46.6)	2500 (67.0)	3550 (95.1)
	30	2.10	1355 (36.3)	1650 (44.2)	2520 (67.5)	3680 (98.6)	5000 (134.0)
	40	2.80	1650 (44.2)	2100 (56.3)	3820 (102.0)	4700/126.0)	5000 (134.0)
	60	4.10	2270 (60.8)	3100 (83.1)	5000 (134.0)	5000 (134.0)	
	80	5.17	3070 (82.3)	3870 (104.0)	5000 (134.0)		
	100	6.90	3420 (91.7)	4500 (121.0)			
	125	8.60	4000 (107.0)	5000 (134.0)			

1. Limited due to boost

- Shaded areas show where indicated droop would be exceeded regardless of capacity.
- Shaded areas show where maximum operating inlet pressure for a given port diameter is exceeded.

P301 & 302 Flow Capacities in SCFH (Nm³/h) of 0.6 Specific Gravity Natural Gas

Outlet Pressure, Spring Part Number, and Accuracy	Inlet Pressure		NPT 1-1/4 (DN32), 1-1/2 (DN40) & 2" (DN50) Body Sizes				
			Orifice Size, Inches (mm)				
	PSIG	BAR	3/16 (4.8)	1/4 (6.4)	3/8 (9.5)	1/2 (13)	3/4 (19)
1 PSIG Set (69 mBAR) 655-788-006 20% Droop	2	0.14	265 (7.1)	180 (4.8)	505 (13.5)	683 (18.3)	1060 (28.4)
	5	0.34	465 (12.5)	425 (11.4)	980 (26.3)	1390 (37.3)	2070 (55.5)
	10	0.69	730 (19.6)	905 (24.3)	1580 (42.3)	2270 (60.8)	3360 (90.0)
	15	1.00	1030 (27.6)	1360 (36.4)	2270 (603.8)	3160 (84.7)	4500 (121.0)
	20	1.40	1230 (86.6)	1660 (44.5)	3030 (81.2)	4000 (107.0)	5000 (134.0)
	30	2.10	1570 (42.1)	2320 (62.2)	4320 (116.0)	5000 (134.0)	5000 (134.0)
	40	2.80	1940 (52.0)	2940 (78.8)	5000 (134.0)	5000 (134.0)	5000 (134.0)
	60	4.10	2650 (71.0)	4180 (112.0)	5000 (134.0)	5000 (134.0)	
	80	5.17	3230 (86.6)	4440 (119.0)	5000 (134.0)		
	100	6.90	3910 (105.0)	5000 (134.0)			
	125	8.60	4440 (119.0)	5000 (134.0)			
3 PSIG Set (207 mBar) 655-788-007 20% Droop	4	0.28	394 (10.6)	490 (13.1)	955 (25.6)	1290 (34.6)	1940 (52.0)
	5	0.34	485 (13.0)	645 (17.3)	1160 (31.1)	1610 (43.1)	2400 (64.3)
	10	0.69	825 (22.1)	1320 (35.4)	2040 (54.7)	2940 (78.8)	4260 (114.0)
	15	1.00	1060 (28.4)	1740 (46.6)	2640 (76.1)	3800 (102.0)	5000 (134.0)
	20	1.40	1250 (33.5)	2070 (55.5)	3430 (91.9)	4640 (124.0)	5000 (134.0)
	30	2.10	1570 (42.1)	2710 (72.6)	4780 (128.0)	5000 (134.0)	5000 (134.0)
	40	2.80	1940 (52.0)	3290 (88.2)	5000 (134.0)	5000 (134.0)	5000 (134.0)
	60	4.10	2630 (70.5)	4490 (120.0)	5000 (134.0)	5000 (134.0)	5000 (134.0)
	80	5.17	3290 (88.2)	5000 (134.0)	5000 (134.0)		
	100	6.90	4000 (107.0)	5000 (134.0)			
	125	8.60	4830 (129.0)	5000 (134.0)			
5 PSI Set (345 mBar) 655-788-004 20% Droop	7	0.48					2710 (72.6)
	10	0.69	750 (20.1)	1120 (30.0)	1830 (49.0)	2580 (69.1)	3740 (100.0)
	15	1.00	1040 (27.9)	1610 (43.1)	2580 (69.1)	3680 (98.6)	5000 (134.0)
	20	1.40	1260 (33.8)	2000 (53.6)	3300 (88.4)	4640 (124.0)	5000 (134.0)
	30	2.10	1640 (44.0)	2630 (70.5)	4580 (123.0)	5000 (134.0)	5000 (134.0)
	40	2.80	1910 (51.2)	3290 (88.2)	5000 (134.0)	5000 (134.0)	5000 (134.0)
	60	4.10	2610 (69.9)	4450 (119.0)	5000 (134.0)	5000 (134.0)	
	80	5.17	3250 (87.1)	5000 (134.0)	5000 (134.0)		
	100	6.90	3900 (105.0)	5000 (134.0)			
	125	8.60	4670 (125.0)	5000 (134.0)			
6 PSI Set (414 mBar) 655-788-005 20% Droop	10	0.69	710 (19.0)	1030 (27.6)	1680 (45.1)	2400 (64.3)	3520 (94.3)
	15	1.00	1030 (27.6)	1550 (41.5)	2520 (67.5)	3460 (92.7)	5000 (134.0)
	20	1.40	1220 (32.7)	1940 (52.0)	3120 (83.6)	4330 (116.0)	5000 (134.0)
	30	2.10	1650 (44.2)	2580 (69.1)	4420 (118.0)	5000 (134.0)	5000 (134.0)
	40	2.80	1910 (51.2)	3230 (86.6)	5000 (134.0)	5000 (134.0)	5000 (134.0)
	60	4.10	2610 (69.9)	4380 (117.0)	5000 (134.0)	5000 (134.0)	
	80	5.17	3260 (87.9)	5000 (134.0)	5000 (134.0)		
	100	6.90	3940 (106.0)	5000 (134.0)			
	125	8.60	4670 (125.0)	5000 (134.0)			

1. Limited due to boost

- Shaded areas show where indicated droop would be exceeded regardless of capacity.
- Shaded areas show where maximum operating inlet pressure for a given port diameter is exceeded.

Interchangeability between the BelGAS P200 series and the P300 series

The unique feature about the BelGAS P300 regulator is that it utilizes the BelGAS P200 series 1.5"x 2" and the 2" x 2" body using a simple adaptor ring. The simplicity of down-sizing a system when a BelGAS P200 unit is installed is as easy as removing the 2 body-to-head bolts and installing a BelGAS P300 head with the appropriate adaptor and bolts. Or, if a 1.5" x 2" or 2" x 2" BelGAS P300 is installed, the BelGAS P300 head can be removed and a BelGAS P200 head installed to up-size your system.

It is important to know, a P300 head can be mounted to a P200 2" body with the appropriate adaptor and bolts. A P200 head cannot be mounted to any existing P300 body unless confirmed to be a BelGAS 2" P200/P300 body.

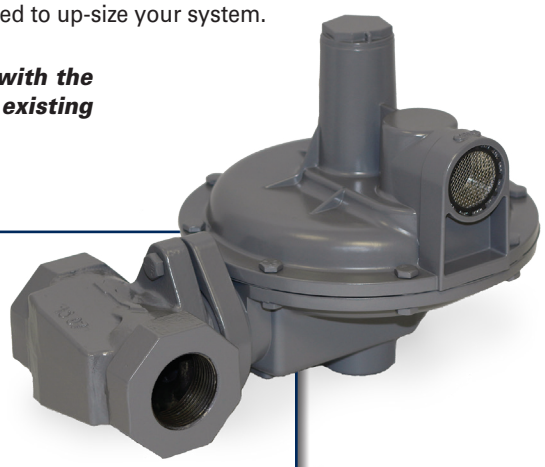

Remove the BelGAS 2" P300 head

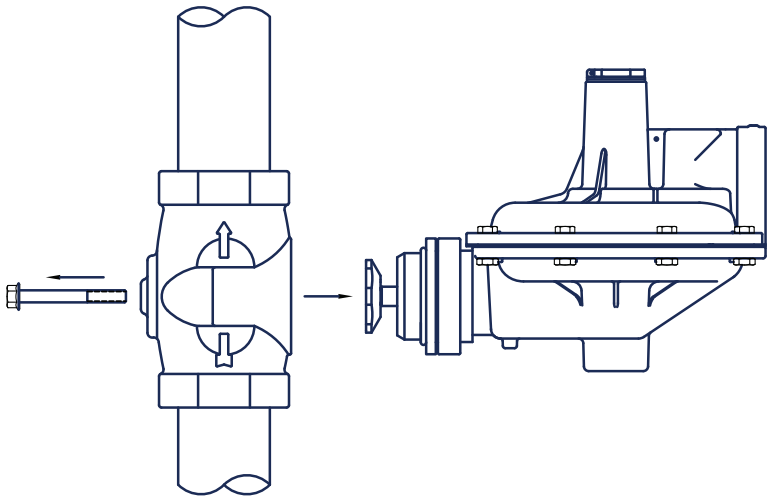

1. REMOVE BOLTS AND P300 FROM BODY, AND REMOVE FROM LINE.

Install the BelGAS P200 head

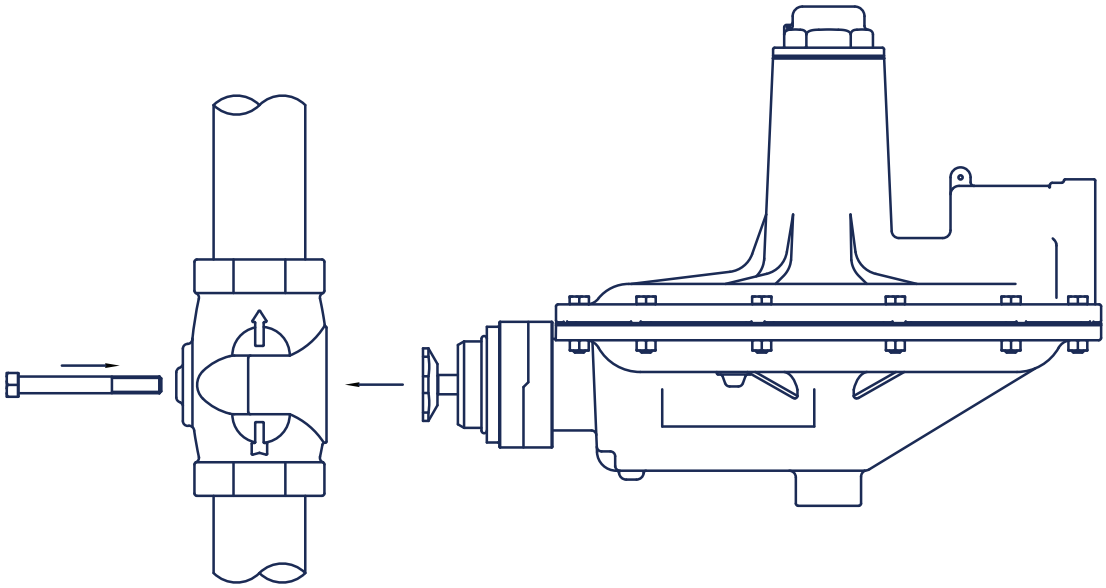

2. USE BOLTS SUPPLIED WITH HEAD ONLY VERSION TO ATTACH TO BODY ALREADY INSTALLED

P300 Parts Drawing

P300

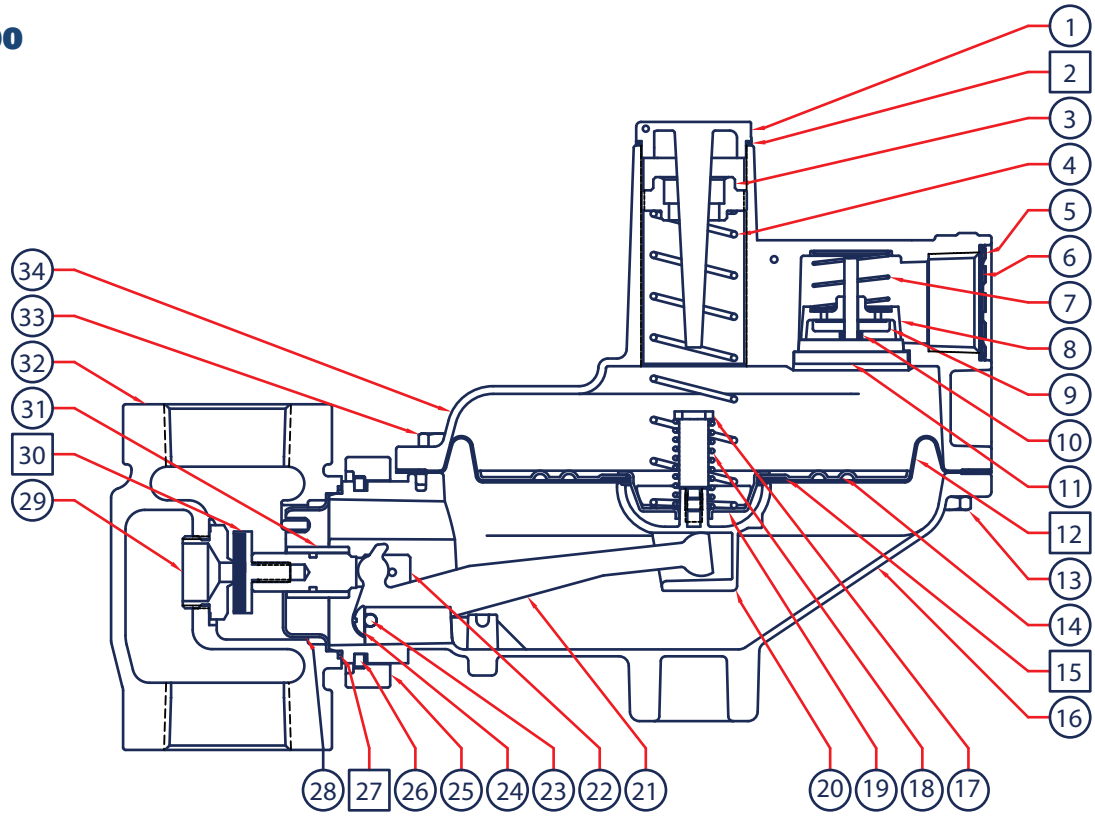

Parts included in Repair Kit 971-300-000

P300 H

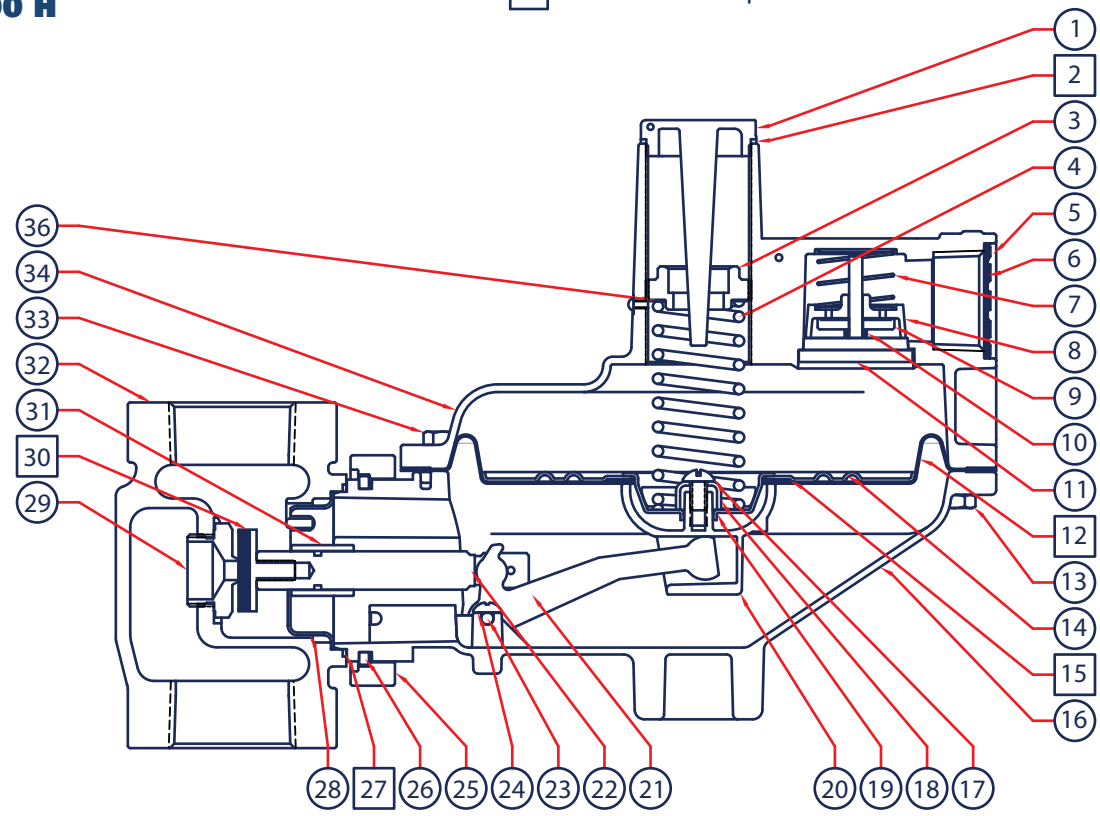

Parts included in Repair Kit 971-300-000

P300 Parts List

Item	Description	Qty.	Part Number
1	Bonnet Cap - Aluminum	1	610-096-000
2	Cap Gasket - Neoprene	1	624-106-000
3	Adjustment Screw - **O Version**	1	648-575-000
	Adjustment Screw - **H Version**		
4	**Range Springs - Normal (O)**	1	
	3.5" - 6.0" WC - Red, Plated Steel		655-788-000
	5.0" - 8.5" WC - Silver, Plated Steel		655-788-001
	6.0"-14.0" WC - Blue, Plated Steel		655-788-002
	12.0"-28.0" WC - Green, Plated Steel		655-788-003
	Range Springs - High (H)		
	1 - 2 PSI - Black, Plated Steel		655-788-004
	1.5 - 3.0 PSI - Olive drab, Plated Steel		655-788-005
	2.5 - 5.5 PSI - Yellow, Plated Steel		655-788-006
	4.5 - 8.0 PSI - Brown, Plated Steel		655-788-007
	Vent Assembly Parts		
5	Retaining Ring	1	693-033-000
6	Vent Screen	1	647-027-000
7	Flapper Close Spring	1	655-788-010
8	Flapper Cap	1	661-017-000
8	Flapper Disk	1	661-016-000
10	Flapper Open Spring	1	655-788-009
11	Flapper Base	1	661-015-000
12	**Diaphragms**	1	618-111-000
	Diaphragm - Nitrile		
13	Build Screw Nuts- Plated Steel	8	634-000-019
14	Diaphragm Plate	1	638-091-000
15	Diaphragm Pad - Rubber	1	649-646-000

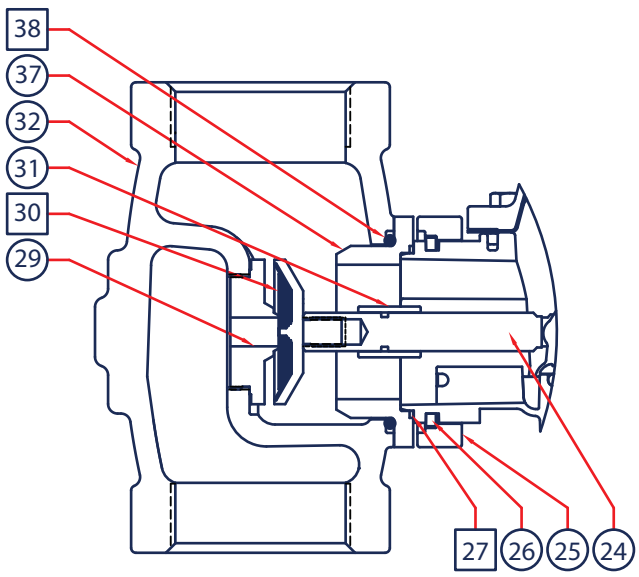

Item	Description	Qty.	Part Number
16	Lower Casing - Aluminum	1	629-259-000
17	Retainer Screw	1	648-577-000
	Relief Valve Stem		648-578-000
18	Relief Valve Spring	1	655-788-008
	Retainer	1	643-226-000
19	Spring Seat	1	650-199-000
20	Pusher Post - **All 301 & 301H Series**	1	637-340-000
	Pusher Post - **All 302 & 302H Series**		637-340-001
21	Lever - Plated Steel - **3010 & 3020**	1	703-012-000
	Lever - Plated Steel - **301H & 302H**		703-012-001
22	Valve Stem - **3010 & 3020**	1	651-107-000
	Valve Stem - **301H & 302H**		651-107-001
23	Lever Pivot Pin - Stainless	1	635-084-000
24	Self Tapping Screw	2	648-576-000
25	Union Ring - Aluminum	1	644-064-000
26	Split Ring	2	644-065-000
27	O-ring	1	649-341-000
28	Throat Baffle	1	686-007-000
29	**Orifices** (1-1/4 + 1-1/2 NPT Bodies)		
	3/16" Aluminum	1	688-074-000
	1/4" Aluminum	1	688-074-001
	3/8" Aluminum	1	688-074-002
	1/2" Aluminum	1	688-074-003
	3/4" Aluminum	1	688-074-004
	Orifices (2 + 2 x 1.5 NPT Bodies)		
	1/4" Aluminum	1	688-016-000
	3/8" Aluminum	1	688-016-001
	1/2" Aluminum	1	688-016-002
	3/4" Aluminum	1	688-016-003
30	Seat Assembly (1-1/4 + 1-1/2 NPT Bodies)	1	650-200-000
	Seat Assembly (2 + 2 x 1-1/2 NPT Bodies)	1	822-033-000
31	Stem Guide	1	626-122-000
32	**Bodies**	1	
	1-1/4" NPT - Iron		664-576-000
	1-1/2" NPT - Iron		664-576-001
	2" NPT - Iron		664-309-000
	2" NPT - Steel		664-342-000
	2" x 1-1/2" - Iron		664-349-000
	2" x 1-1/2" - Steel		664-349-001
	125# FF Iron		664-377-000
	150# RF Steel		665-378-000
33	Build Screws - Plated Steel	8	648-567-003
34	Bonnet - Aluminum - **All 0 Versions**	1	604-274-000
	Bonnet - Aluminum - **H Version / 1-2 & 1.5-3 Spring**		800-135-000
	Bonnet - Aluminum - **H Version / 2.5-5 & 4.5-8 Spring**		800-135-001
35	Hex Cap Screw	1	648-066-000
36	Slip Disk	1	644-066-000
37	Body Adaptor for **2" NPT & Flanged Body Only**	1	654-199-000
38	Body Adaptor O-ring for **2" NPT & Flanged Body Only**	1	649-000-152

F300 Pressure Regulator

- Minimize Sudden Downstream Load Change
- Wide Pressure Ranges
- P302 has Internal Relief Valve for Overpressure Protection
- Ideal for Fix Factor Billing

The F300 series pilot operated pressure regulator is a manual, direct acting, self-operating, spring loaded, adjustable regulator. The F300 series is used in applications where pressure reduction is required. The regulator will reduce the risk of "shock" from abrupt changes of downstream conditions. This can help prevent safety equipment from shutting an operation down.

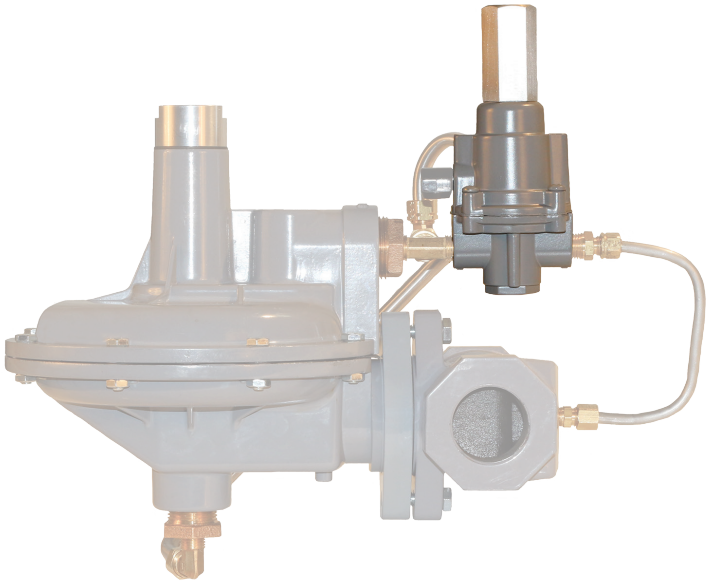

Applications

- Compressors
- Gas Engines
- Service Regulators

Materials of Construction

Adjusting Screw	Aluminum
Body	Ductile Iron or WCB Steel
Bonnet	Aluminum
Closing Cap	Aluminum
Diaphragm	Nitrile
Lower Casing	Aluminum
Molded Seat Assembly	Nitrile
Orifice	Aluminum
Flange	Ductile Iron / WCB Steel

F300 Series Maximum Inlet Pressure

		F300	
Orifice Inches	Range	Maximum Inlet Pressure	
		PSIG	BAR
3/16"	Any	125	8.618
1/4"	Any	125	8.618
3/8"	Any	80	5.516
1/2"	Any	60	4.137
3/4"	Any	20	1.379

Specifications

Maximum Inlet	See Table 1	
Maximum Emergency Outlet	25 PSIG	
Pressure Ranges	See Table 2	
Port Sizes	1.25 NPT	
	1.5 NPT	
	1.5 NPT x 2 NPT	
	2 NPT	
Orifice Sizes	3/16"	
	1/4"	
	3/8"	
	1/2"	
	3/4"	
End Connections	NPT	
	150 RF Flange	Steel Units Only
	125 FF Flange	Iron Units Only
Temperature Range	-20˚F to 180˚F	
	-29˚C to 82˚C	
Approx. Weight	10 lbs. (4.5 kg)	

F300 Series Range Springs

Table 2

Model	PL84 Pilot	Spring Ranges		Pilot Spring Color	Pilot Spring Part Number
		PSIG	BAR		
F300	832-036-002	2 - 10 PSIG	0.137 - 0.689	Black	655-000-202
F300	832-036-003	2 - 20 PSIG	0.137 - 1.378	Yellow	655-000-267

F300 Part Matrix

F300				0					
									Version
	D								Internal Registration
	P								External Registration
									Port Size
		12							1.25 NPT
		14							1.5 NPT
		15							1.5 x 2 NPT
		16							2 NPT
									Spring Range - WC or PSI / mBAR
			010						2 - 10 PSI / 138 - 689
			020						2 - 20 PSI / 138 -1378
				0					
									Special Construction
					0				None
					A				150 RF (2" Steel Only)
					E				125 FF (2" Iron Only)
									Orifice
						3			3/16" (Only for P Version)
						4			1/4"
						6			3/8"
						8			1/2"
						B			3/4"
									Port Orientation
							3		Right
							4		Left
									Body Material
								0	Iron
								2	Steel

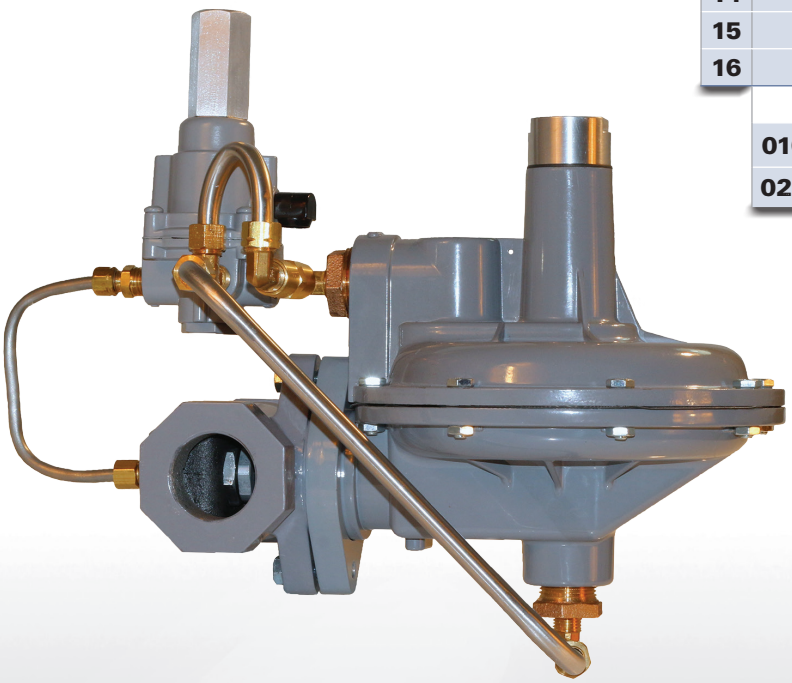

	Kit Includes	Part Number
F300 Regulator	Diaphragm, Disk Holder, Cap Gasket, O-Ring	971-F30-000

F200 Body Orientation*

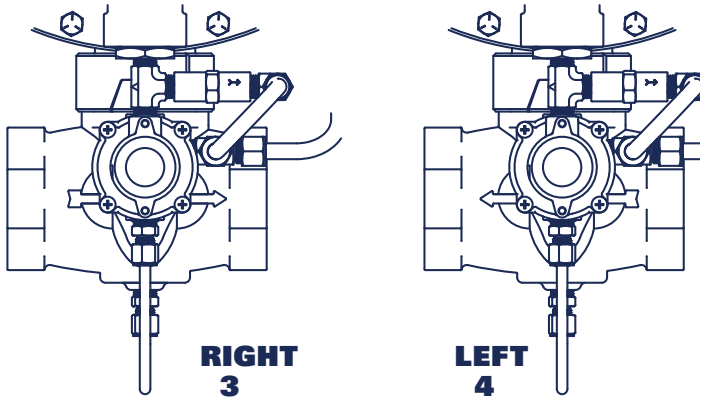

* Port orientation is based on the body's "Out" port location in relation to the top view of the regulator.

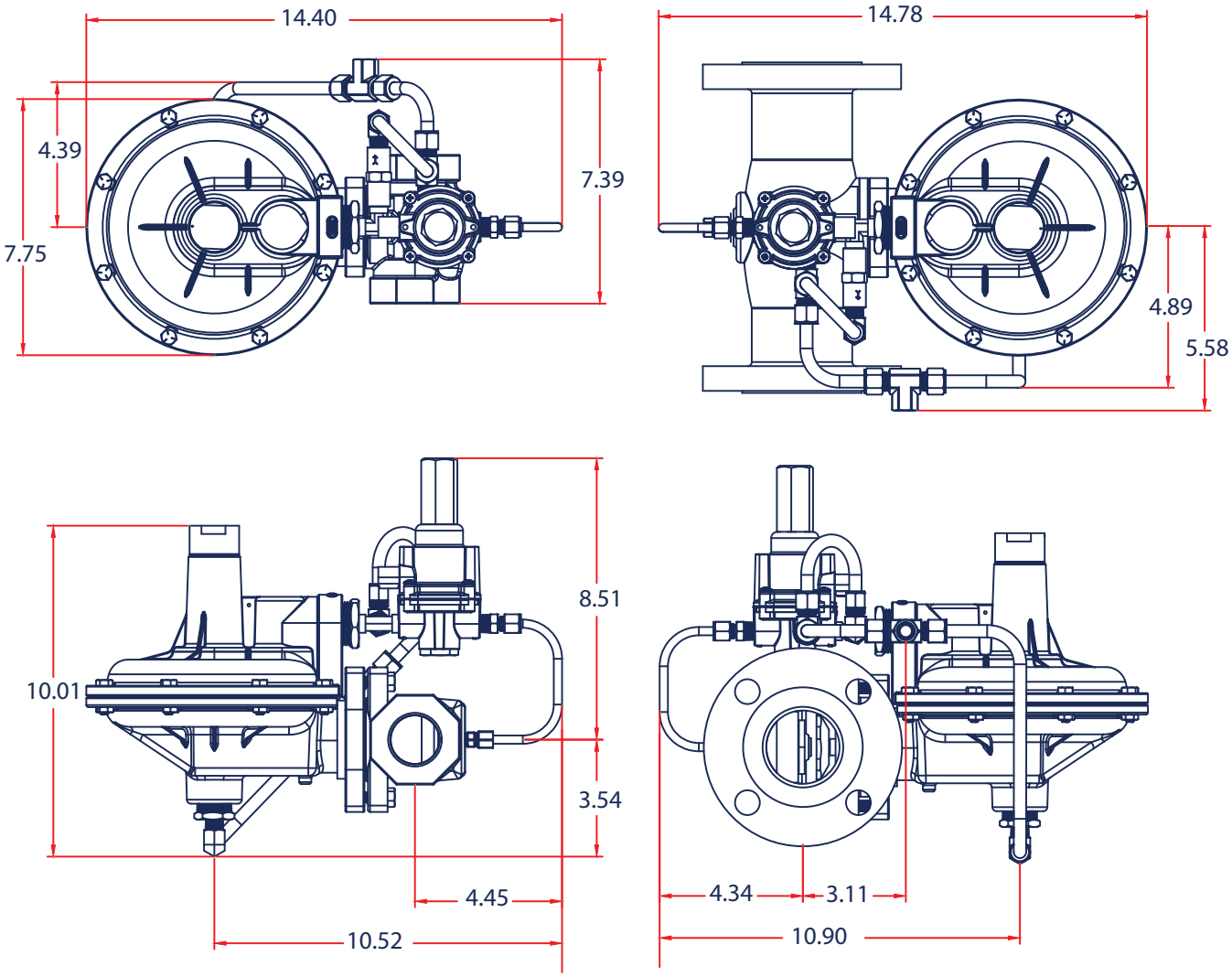
14.40
4.39
7.75
7.39
14.78
4.89
5.58
8.51
10.01
3.54
4.45
10.52
4.34
3.11
10.90

F300D flow Capacities in SCFH of 0.6 Specific Natural Gas, **Internal Registration**

Outlet Pressure, Spring Part Number, and Accuracy	Inlet Pressure		NPT 1.5 (DN40) Body Size				NPT 2.0 (DN50) Body Size			
			Orifice Size, Inches				Orifice Size, Inches			
	PSIG	BAR	1/4"	3/8"	1/2"	3/4"	1/4"	3/8"	1/2"	3/4"
2.0 PSIG Set Pressure XXX-XXX-XXX 0.5 PSIG Droop	5	0.34	800	2100	3000	5000	750	2000	3000	5000
	10	0.69	1250	3100	4800	6000	1300	3400	5000	8500
	15	1.00	1700	4200	6500	7000	1700	4300	6600	12000
	20	1.38	2000	5000	7500	7000	2100	5200	8300	14000
	30	2.10	2700	6500	9000		2750	6800	10000	
	50	3.45	4000	9000	9500		4000	9500	15000	
	60	4.10	4500	9500	9500		4700	11000	15000	
	80	5.52	5800	9500			6000	12900		
	100	6.90	7000				7000			
	125	8.60	7500				7500			
5.0 PSIG Set Pressure XXX-XXX-XXX 0.5 PSIG Droop	10	0.69	1250	3000	4200	7000	1200	3000	4000	700
	15	1.00	1700	4000	6000	7000	1700	4100	6000	10000
	20	1.38	2000	5000	7500	7000	2100	5200	7200	13000
	30	2.10	2700	7000	10000		2750	6500	10000	
	50	3.45	4000	9000	11000		4000	9500	14000	
	60	4.10	4500	10500	11000		4700	11000	16000	
	80	5.52	5800	11500			6000	13000		
	100	6.90	7000				7000			
	125	8.60	7700				8000			
10.0 PSIG Set Pressure XXX-XXX-XXX 0.5 PSIG Droop	15	1.00	1400	3000	4600	7500	1300	3200	4000	7600
	20	1.38	1800	4000	6800	7500	1900	4200	6000	10000
	30	2.10	2700	6000	9800		2600	6500	10000	
	50	3.45	4000	9000	11000		4000	9200	15000	
	50	3.45	4000	9000	11000		4000	9200	15000	
	50	3.45	4000	9000	11000		4000	9200	15000	
	100	6.90	7200				7000			
	125	8.60	8500				8300			
15.0 PSI Set Pressure XXX-XXX-XXX 0.5 PSIG Droop	20	1.38	1600	4000	5200	7500	1500	3500	5000	9000
	30	2.10	2600	6000	8500		2700	6000	8500	
	30	2.10	2600	6000	8500		2700	6000	8500	
	60	4.10	4600	10500	12000		4800	10500	17000	
	80	5.52	5900	12000			6000	13000		
	100	6.90	7200				7000			
	125	8.60	8500				8300			
20.0 PSIG Set Pressure XXX-XXX-XXX 20.0 PSI Set Pressure	30	2.10	2200	5500	7500		2400	5500	7500	
	50	3.45	3800	9500	11000		4000	9200	15000	
	60	4.10	4600	10500	13000		4800	10500	17000	
	80	5.52	5900	12000			6000	13000		
	100	6.90	7200				7000			
	125	8.60	8500				8300			

1. Limited due to boost

- Shaded areas show where maximum operating inlet pressure for a given port diameter is exceeded.

F300P flow Capacities in SCFH of 0.6 Specific Natural Gas, **External Registration**

Outlet Pressure, Spring Part Number, and Accuracy	Inlet Pressure		NPT 1.5 (DN40) Body Size				
			Orifice Size, Inches				
	PSIG	BAR	3/16"	1/4"	3/8"	1/2"	3/4"
2.0 PSIG Set Pressure XXX-XXX-XXX 2.0 PSI Set Pressure	5	0.34	510	770	1800	2100	4250
	10	0.69	870	1450	3050	4500	8350
	15	1.00	1130	1800	3700	5650	10900
	20	1.38	1280	2150	4900	7600	13500
	30	2.10	1600	2750	6100	9100	
	50	3.45	2350	4100	9000	13500	
	60	4.10	2700	4750	10300	16100	
	80	5.52	3450	6050	12900		
	100	6.90	4300	6900			
	125	8.60	5200	8300			
5.0 PSIG Set Pressure XXX-XXX-XXX 0.5 PSIG Droop	10	0.69	650	1300	2550	3200	6500
	15	1.00	900	1500	3300	5250	9600
	20	1.38	1290	2150	4700	7450	12900
	30	2.10	1600	2750	6100	9200	
	50	3.45	2350	4100	9000	13500	
	60	4.10	2700	4750	10300	16100	
	80	5.52	3450	6050	13000		
	100	6.90	4300	6900			
	125	8.60	5200	8300			
10.0 PSIG Set Pressure XXX-XXX-XXX 0.5 PSIG Droop	15	1.00	700	1150	2700	4100	7200
	20	1.38	1200	1950	4100	6000	11600
	30	2.10	1600	2750	6100	9200	
	50	3.45	2350	4100	9000	13500	
	60	4.10	2700	4750	10300	16100	
	80	5.52	3450	6050	13000		
	100	6.90	4300	6900			
	125	8.60	5200	8300			
15.0 PSIG Set Pressure XXX-XXX-XXX 0.5 PSIG Droop	20	1.38	1030	1650	3050	3800	7700
	30	2.10	1500	2450	5700	7800	
	50	3.45	2350	4100	9000	13500	
	60	4.10	2700	4750	10300	16100	
	80	5.52	3450	6050	13000		
	100	6.90	4300	6900			
	125	8.60	5200	8300			
20.0 PSIG Set Pressure XXX-XXX-XXX 0.5 PSIG Droop	30	2.10	1200	2100	4700	7300	
	50	3.45	2350	4100	9000	13500	
	50	3.45	2350	4100	9000	13500	
	80	5.52	3450	6050	13000		
	100	6.90	4300	6900			
	125	8.60	5200	8300			

1. Limited due to boost

- Shaded areas show where maximum operating inlet pressure for a given port diameter is exceeded.

F300P

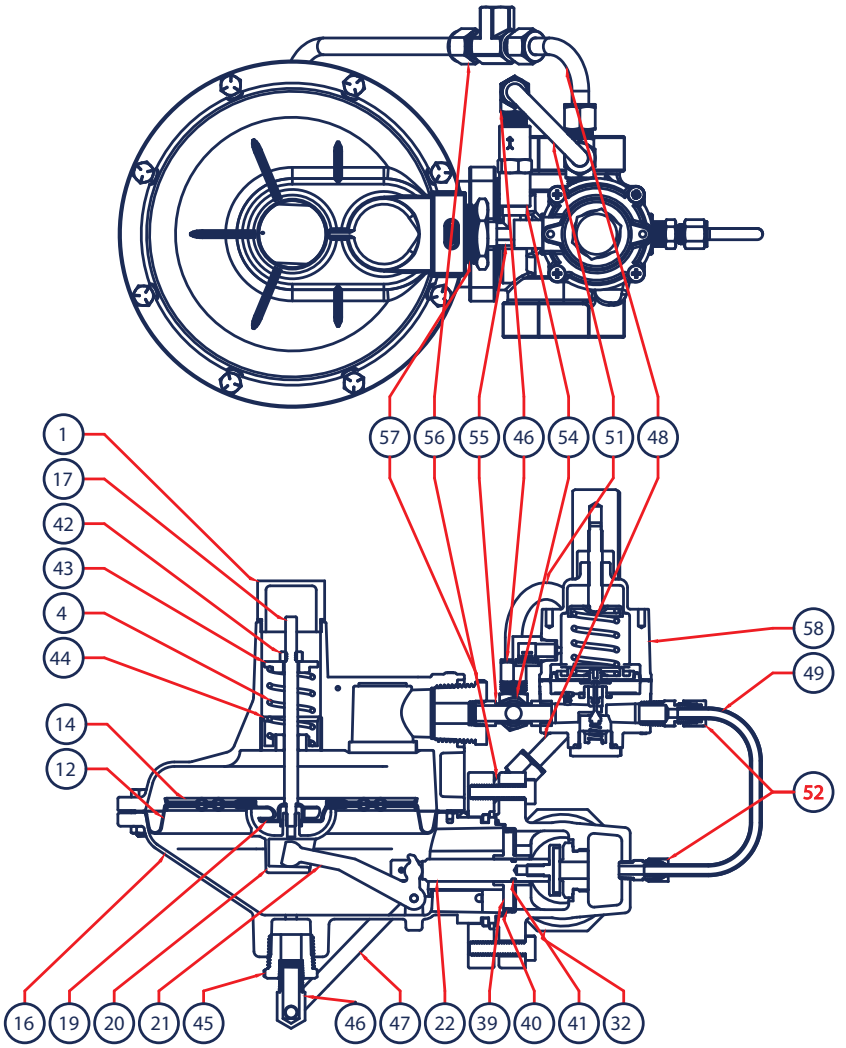
1
17
42
43
4
44
14
12
57
56
55
46
54
51
48
58
49
52
16
19
20
21
45
46
47
22
39
40
41
32

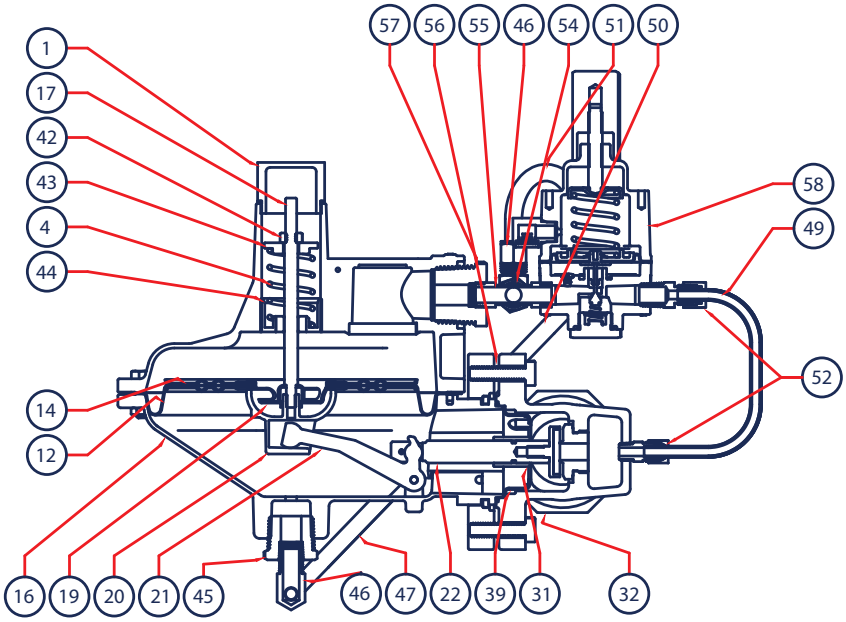
1
17
42
43
4
44
14
12
57
56
55
46
54
51
50
58
49
52
16
19
20
21
45
46
47
22
39
31
32

Item	Description	Qty.	Part Number
1	Closing Cap	1	610-111-000
4	Closing Spring	1	655-808-000
12	Diaphragm	1	618-111-000
14	Diaphragm Plate	2	638-091-000
16	Lower Casing - Aluminum	1	629-259-001
17	Stem	1	689-035-000
19	Diaphragm relief	1	650-199-000
20	Pusher Post, F300	1	637-340-002
21	Lever - Plated Steel - F300	1	703-012-001
22	Valve Stem - F300	1	651-107-001
28	Throat Baffle (F300D Only)	1	686-007-000
31	Stem Guide (F300D Only)	1	626-122-000
32	Body, 1-1/4 NPT	1	664-576-002
	Body, 1-1/2 NPT		664-576-003
	Body, 2" NPT - Iron		664-443-000
	Body, 2" NPT - Steel		664-443-001
	Body, 1-1/2 x 2" NPT - Iron		664-441-000
	Body, 1-1/2 x 2" NPT - Steel		664-441-001
	CL 125FF 2" - Iron		664-444-000
	CL 150RF 2" - Steel		664-444-001
34	Bonnet 0 Version	1	604-274-000
37	Body Adaptor - 2" Only	1	654-199-000
38	O-Ring - Body Adapter - 2" Only	1	649-000-152
39	Throat Block (F300P Only)	1	653-064-000
40	O-Ring - Throat Block (F300P Only)	1	649-392-000
41	O-Ring - Valve Stem (F300P Only)	1	649-269-005
42	Stem Nut	1	634-000-054
43	Spring Guide	1	626-130-000
44	Spring Seat	1	650-219-000
45	Lower Casing Bushing 3/4 x 1/4	1	622-076-000
46	Elbow 1/4 x 3/8	2	622-061-000
47	Sensing Tubing F300P Long End	1	660-149-000
48	Sensing Tubing F300P Short End	1	660-150-000
49	Pilot Supply Tubing	1	660-151-000
50	Sensing Tubing F300D	1	660-152-000
51	Relief Valve Tubing	1	660-124-000
52	Straight 1/4 X 1/4 Fitting	2	622-045-000
53	Right Angle Tee 1/4 X 3/8 X 3/8	1	622-074-000
54	Relief Valve	1	678-061-000
55	Tee M1/4 X M1/4 X M1/4	1	622-077-000
56	In-Line Tee F1/4 x 3/8 x 3/8 (F200P Only)	1	622-078-000
57	Bonnet Bushing 1 X 1/4	1	622-075-000
58	PL84 Pilot 2-10 PSI	1	832-036-002
	PL84 Pilot 2-20 PSI		832-036-003

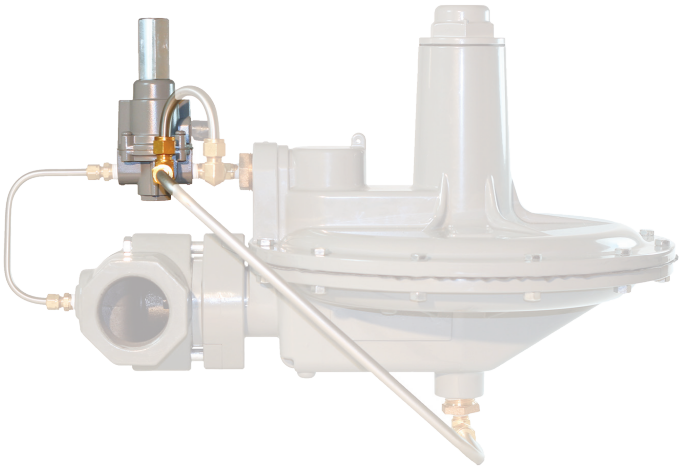

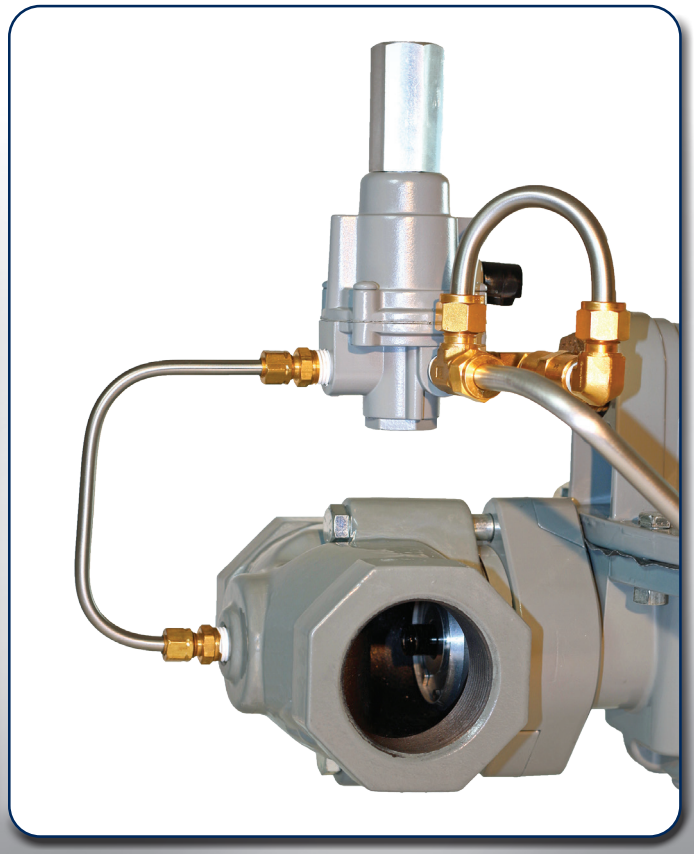

P303 Pressure Regulator

- Minimize Sudden Downstream Load Change
- Wide Pressure Ranges
- Integral Monitoring

The BelGAS P303 and P303H gas pressure reducing regulators are available with a true monitor regulator, which acts independently of the main regulator. The monitor provides equivalent overpressure protection when compared to a standard two-regulator monitor setup. Should one regulator fail, the other regulator provides control and overpressure protections.

The regulator's fast action reduces the risk of shock from abrupt changes in downstream conditions and can help to prevent safety equipment from causing unnecessary, expensive, and time-consuming operation shutdowns.

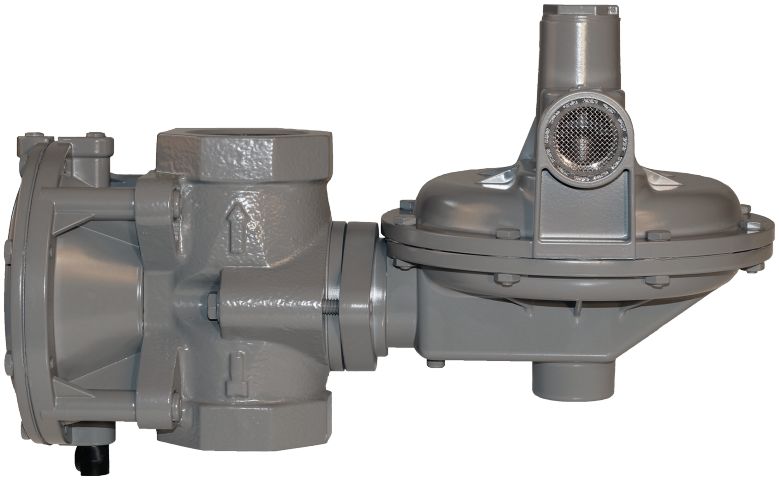

Applications

- Compressors
- Gas Engines
- Service Regulators

Materials of Construction

Adjusting Screw	Aluminum
Body	Ductile Iron
Bonnet	Aluminum
Closing Cap	Zinc
Diaphragm	Nitrile
Lower Casing	Aluminum
Molded Seat Assembly	Nitrile
Orifice	Aluminum

P303 Series Maximum Inlet Pressure

		P303		P303H	
Orifice Inches	Range	Maximum Inlet Pressure		Maximum Inlet Pressure	
		PSIG	BAR	PSIG	BAR
1/4"	Any	60	4.136	125	8.618
3/8"	Any	30	2.068	80	5.515
1/2"	Any	25	1.723	60	4.136
3/4"	Any	15	1.034	40	2.757

Specifications

Maximum Inlet	See Table 1
Maximum Emergency Outlet	15 PSIG
Pressure Ranges	See Table 2
Port Sizes	1.5 NPT
	1.5 NPT x 2 NPT
	2 NPT
Orifice Sizes	1/4"
	3/8"
	1/2"
	3/4"
End Connections	NPT
	2" 125 FF Flange

P303 Series Range Springs

Table 2

Model	Spring Ranges		Spring Color	Part Number
	WC.	mBar		
P303	4 - 6 WC	9.96 - 15	Red	655-788-000
	5 - 8.5 WC	12 - 21	Silver	655-788-001
	8 - 14 WC	19.93 - 35	Blue	655-788-002
	12 - 28 WC	30 - 70	Green	655-788-003
	PSIG	Bar		
P303H	1 - 1.6 PSIG	.07 - .11	Black	655-788-004
	1.5 - 2.25 PSIG	.10 - .15	Olive	655-788-005

How Does the P303 Series Work?

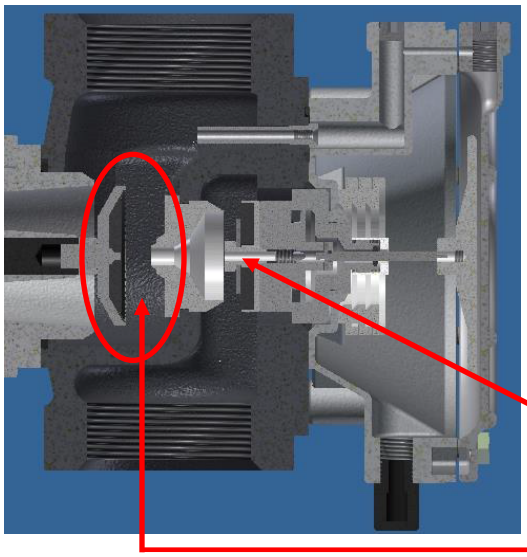

Under normal operational conditions, the P303 Series performs as the P300. When there is a demand downstream of the regulator, the main valve disk moves away from the orifice to allow flow. The Monitor diaphragm and piston are always in motion based on outlet feedback though the pitot tube at the outlet.

Secondary or monitor orifice & valve disk

Main orifice & valve disk

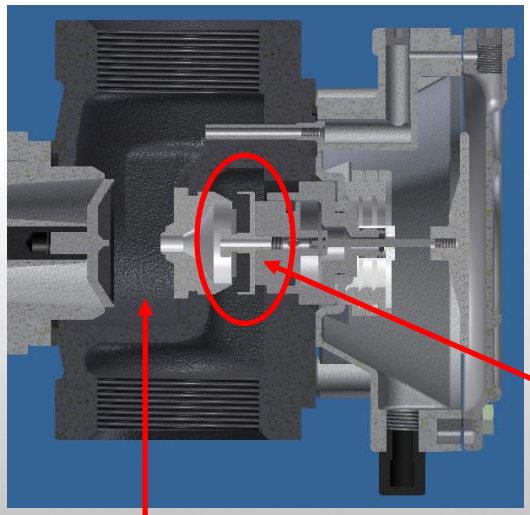

The monitor module will activate when the system experiences a failure such as the main valve disk is stuck open or the lever disengages from the valve stem assembly. When the P303 main regulator fails to regulate and the output pressure climbs, the increased output
pressure will move the monitor valve disk towards the secondary sealing surface of the orifice.

Monitor valve disk starts to regulate

Main seat lodged open

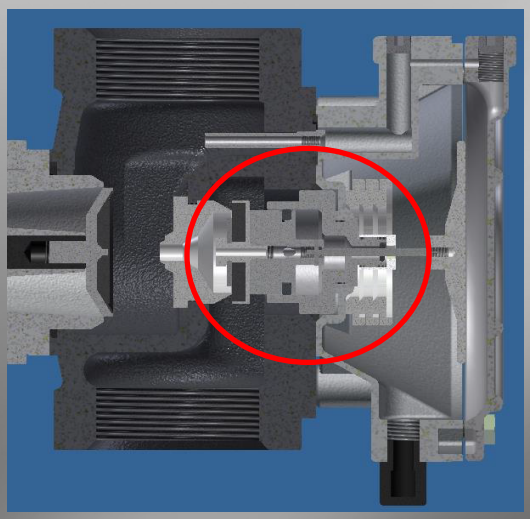

Once the output pressure has increased 7" to 28" WC above the set operating output pressure, the monitor valve disk will fully seal on the secondary sealing surface of the orifice. At this point, the only supply pressure that is passing through the unit is passing through the tiny bleed hole on the disk holder screw and venting directly out the main regulator diaphragm assembly and through the main regulator's vent assembly.

BelGAS P303 Part Number Selection

Before attempting to select a BelGAS P303, several pieces of information should be known: port size, the supply pressure the unit operates at normally, the output pressure the unit operates at normally, the downstream flow requirement during normal operation, the maximum amount of output pressure the unit is allowed to have during an over pressurization situation, and the media the unit will be regulating.

Example #1

Known Requirements
1.5 NPT
30 PSIG inlet
7" WC outlet under normal conditions
1500 SCFH 0.6 specifc gravity natural gas
Should not rise above 1.3 PSIG

Port Size
The code of for 1.5 NPT in the Port Size section is 14.
P303X14XX0XXXXX

Outlet Pressure Range
It's best to operate in the middle of the range in order to preserve the life of the unit's springs. Since the output pressure is supposed to be at 7" WC during normal operation, the code for the Spring Coordination section is 85 (5 - 8.5" WC) and the code for the Version section is 0. The unit that is paired with the Spring Coordination section is the G1 option from the Monitor Range section. G1 has a range of 4-9.5" WC
P303014850XXXG1

Downstream Flow Requirements
The unit needs to flow at least 1500 SCFH under normal operation with a supply pressure of 30 PSIG. According to P300 Series flow tables for that spring range and outlet pressure droop, both the 1/4" orifice and the 3/8" orifice generated more than 1500 SCFH. The 1/4" orifice generates 1700 SCFH flow of 0.6 specific gravity natural gas. The 3/8" orifice generates 2400 SCFH flow 0.6 specific gravity natural gas.
P3030148504XXG1 or P3030148506XXG1

Body and Bonnet Orientation
BelGAS offers sixteen different body/bonnet orientation combination controlled through two digits in the part number.
If no special orientation is required the 3F orientation is selected.
P30301485043FG1 or P30301485063FG1

Over Pressurization Conditions
Since the unit cannot climb above 1.3 PSIG, either of the remaining orifice options will apply based on the relief curves provided.
P30301485043FG1 or P30301485063FG1

Based on the criteria provided, both regulators listed above can handle the application. However, if less pressure build up during over pressurization is desirable in this particular function, the 1/4" will deliver a slightly lower output pressure during over pressurization.
P30301485043FG1

Example #2

Known Requirements
2" 125 FF
40 PSIG inlet
1 PSIG outlet under normal conditions
3000 SCFH air
Should not rise above 2.5 PSIG

Port Size
The code for 2" 125FF in the Port Size section is 16. In the Special Construction section, you should put code E.
P303X16XXEXXXXX

Outlet Pressure Range
It's best to operated in the middle of the range in order to preserve the life of the unit's springs. Since the output pressure is supposed to be at 1 PSIG during normal operation, the unit should be the S1 option from the Monitor Range section. S1 has a range of 1.0 - 1.6 PSIG. That means the code for the Spring Coordination section is 02 and the Version is H.
P303H1602EXXXS1

Downstream Flow Requirements
The unit needs to flow at least 3000 SCFH under normal operation. According to the P300 Series flow tables for that spring range and outlet pressure droop, the 3/8", 1/2" and 3/4" orifices all generate more than 5000 SCFH flow of 0.6 specific gravity natural gas (which is equivalent to 3875 SCFH air).
P303H1602E6XXS1 or P303H1602E8XXS1
or P303H1602EBXXS1.

Body and Bonnet Orientation
BelGAS offers sixteen different body/bonnet orientation combination controlled through two digits in the part number. If no special orientation is required, the 3F orientaten is selected.
P303H1602E63FS1 or P303H1602E83FS1 or
P303H1602EB3FS1

Over Pressurization Conditions
Since the unit cannot climb above 2.5 PSIG, the 3/4" orifice is eliminated from the relief curves provided. Either of the remaining two orifice options will work at the supply of 40 PSIG
P303H1602E63FS1 or P303H1602E83FS1

Based on the criteria provided, both regulators listed above can handle the application. However, the 1/2" orifice will flow more than the 3/8" orifice. So if more flow during normal operation is desirable in this particular function:
P303H1602E83FS1

P303 Part Matrix

P303												
	↑	↑↑	↑↑	↑	↑		↑	↑	Version			
	0								Normal			
	H								High Pressure			
									Port Size			
		14							1.5 NPT			
		15							1.5 x 2 NPT			
		16							2 NPT			
									Spring Range			
									WC or PSIG	mBAR		
			06						4 - 6" WC	9.96 - 14.95	use with **G1** Monitor	Note: Monitor Rage should be chosen prior to choosing Main Spring
			85						5 - 8.5" WC	12.45 - 21.17	use with **G1** Monitor	
			14						8 - 14" WC	19.92 - 34.87	use with **G2** Monitor	
			28						12" - 28" WC	29.89 - 69.74	use with **R1**, **B1** Monitor	
			02						1 - 1.6 PSIG	68.94 - 110.31	use with **S1** Monitor	
			03						1.5 - 2.25 PSIG	103.42 - 155.13	use with **S2** Monitor	
									Special Construction			
				0					None			
				E					125FF (2" Iron Only)			
									Orifice			
					4				1/4"			
					6				3/8"			
					8				1/2"			
					B				3/4"			
									Port Orientation			
						1			Up (Standard)			
						2			Down			
						3			Right			
						4			Left			
									Bonnet Orientation			
							C		12 O'clock			
							D		3 O'clock (Standard)			
							E		6 O'clock			
							F		9 O'clock			
									Monitor Range			
									WC or PSIG	mBAR		
								G1	4 - 9.5" WC	9.96 - 23.66	use with **06 or 85** Main Spring	Note: Monitor Rage should be chosen prior to choosing Main Spring
								G2	8 - 14" WC	19.92 - 34.87	use with **14** Main Spring	
								R1	10 - 20" WC	24.90 - 49.81	use with **28** Main Spring	
								B1	18 - 33" WC	44.83 - 82.19	use with **28** Main Spring	
								S1	.75 - 1.6 PSIG	51.71 - 110.31	use with **02** Main Spring	
								S1	1.25 - 2.25 PSIG	86.18 - 15513	use with **03** Main Spring	

0 Version Only

H Version Only

P303 Regulator Rebuild Kits

	Kit Includes	Part Number
P303 Regulator	Diaphragm, Disk Holder, Cap Gasket, O-Ring	971-303-000

P303 Body Orientation*

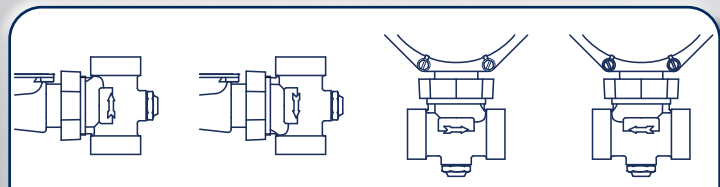

UP 1 | **DOWN** 2 | **RIGHT** 3 | **LEFT** 4

* Port orientation is based on the body's "Out" port location in relation to the top view of the regulator.

P303 Vent Positions

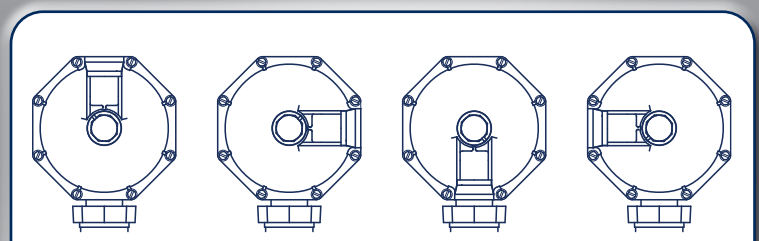

12 C | **3** D | **6** E | **9** F

P303 Dimensions

Body Size	A		A2		B	C	D	
Inches	NPT	125 FF Flange	NPT	125 FF Flange	NPT	NPT	NPT	125 FF Flange
1.5	6.13		3.06		6.66	15.14	4.61	
1.5 x 2	6.13		3.06		6.66	15.14	4.61	

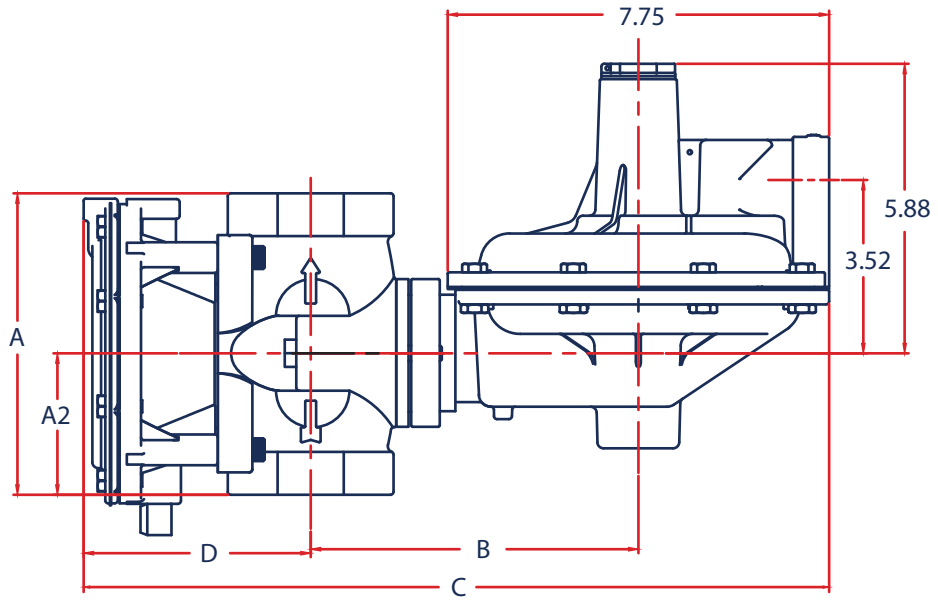

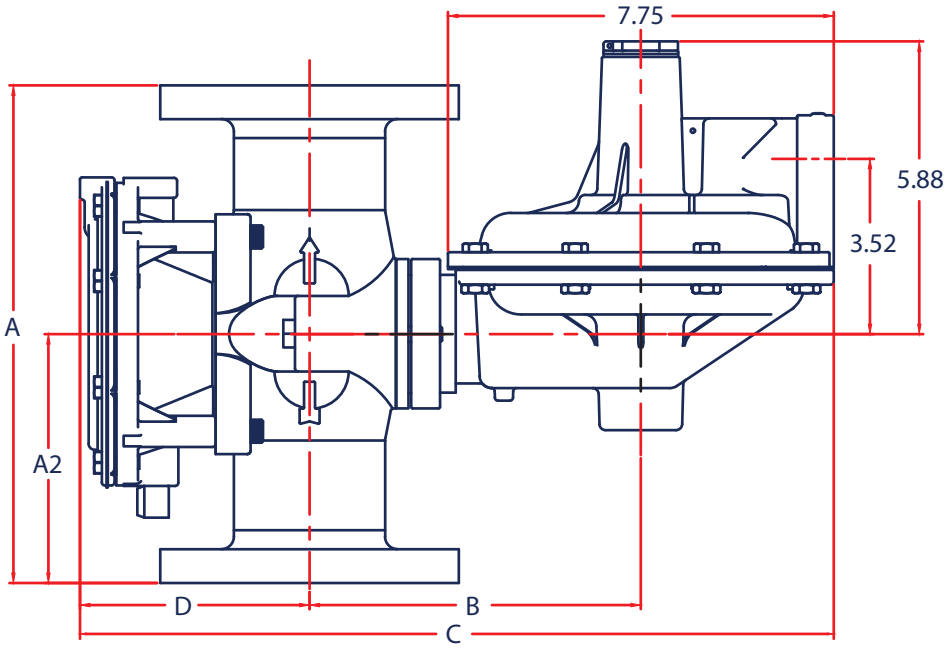

*NOTE ORIENTATIONS 1E AND 2E ARE NOT AVAILABLE WITH FLANGE BODY

P303 Relief Capacities

G1 Module Performance

Set Point: Maximum Allowable Supply Pressure, 7" WC Output Pressure, 5 SCFH

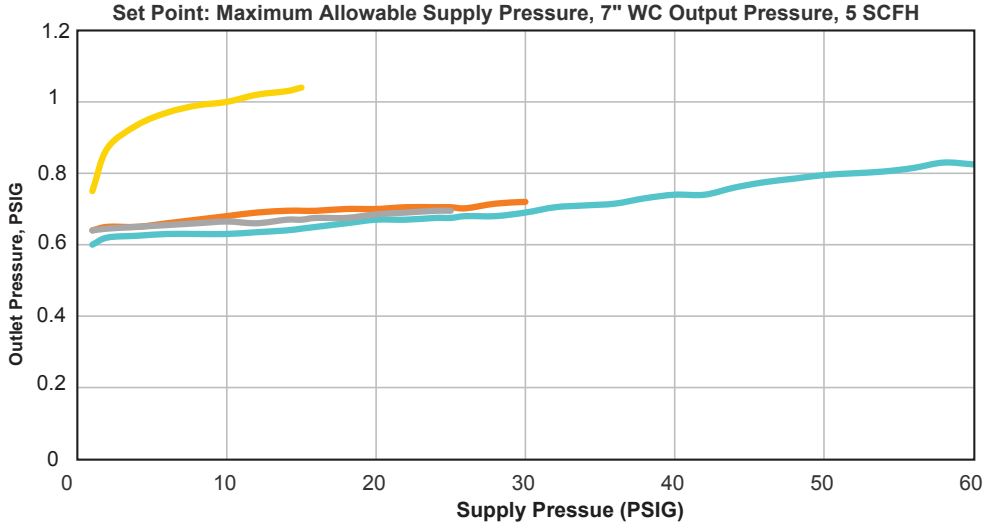

S1 Module Performance

Set Point: Maximum Allowable Supply Pressure, 1 PSIG Output Pressure, 5 SCFH

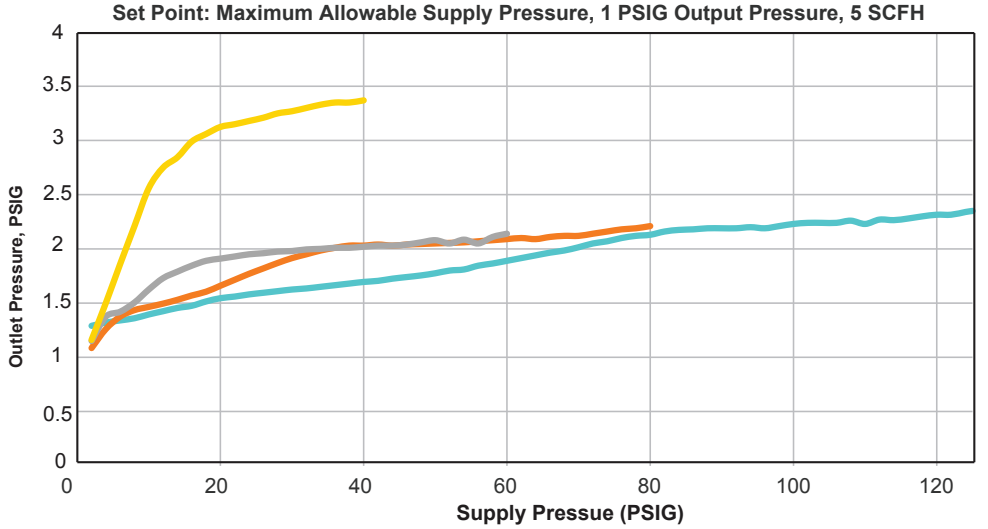

S2 Module Performance

Set Point: Maximum Allowable Supply Pressure, 2 PSIG Output Pressure, 5 SCFH

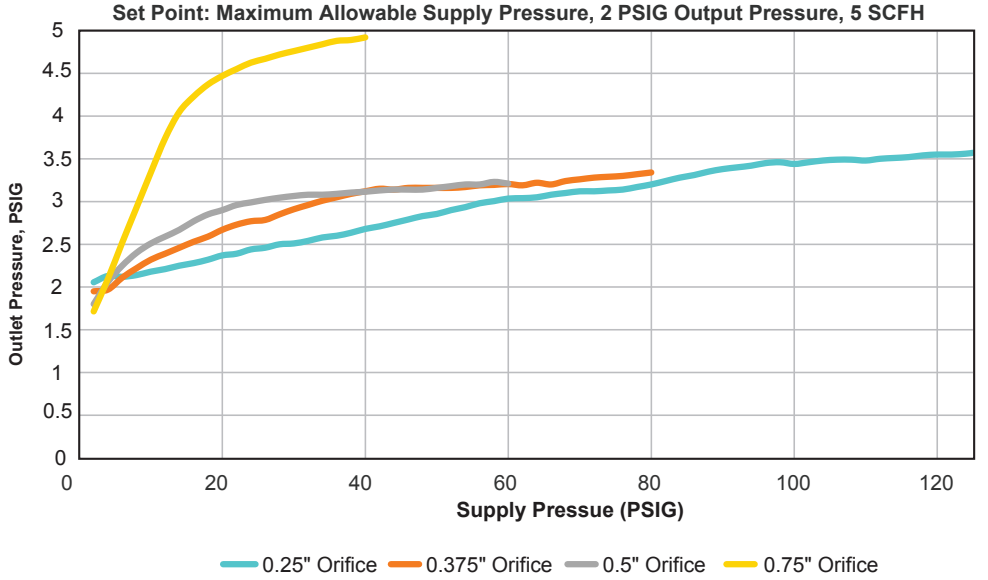

P303 Flow Capacities in SCFH (Nm³/h) of 0.6 Specific Gravity Natural Gas

Outlet Pressure, Spring Part Number, and Accuracy	Inlet Pressure		NPT 1-1/4 (DN32) Body Size				
			Orifice Size, Inches (mm)				
	PSIG	BAR	3/16 (4.8)	1/4 (6.4)	3/8 (9.5)	1/2 (13)	3/4 (19)
5 " WC Set (12 mBAR) 655-788-000 1" WC Droop	2	0.14			700 (18.8)	1000 (26.8)	1600 (42.9)
	5	0.34		700 (18.8)	1400 (37.5)	1900 (50.9)	2600 (70)
	10	0.69		1200 (32.2)	2300 (61.6)	3000 (80.4)	3500 (93.8)
	15	1.00	1050 (28.1)	1580 (42.30	3000 (80.4)	3500 (93.8)	3500 (93.8)
	25	1.70	1400 (37.5)	2400 (64.3)	3500 (93.8)	3500 (93.8)	
	30	2.10	1550 (41.5)	2700 (72.4)	3500 (93.8)		
	60	4.10	2300 (61.6)	3500 (93.8)			
	80	5.17	3000 (80.4)				
	100	6.90	3200 (85.8)				
	125	8.60	3500 (93.8)				
7" WC Set (17 mBAR) 655-788-001 1" WC Droop	2	0.14					1400 (37.5)
	5	0.34			1100 (29.5)	1700 (45.6)	2000 (53.6)
	10	0.69		750 (20.1)	2100 (56.3)	2400 (64.3)	3500 (93.8)
	15	1.00	1000 (26.8)	1050 (28.1)	3000 (80.4)	3500 (93.8)	3500 (93.8)
	25	1.70	1250 (33.5)	1950 (52.3)	3500 (93.8)	3500 (93.8)	
	30	2.10	1500 (40.2)	2550 (68.3)	3500 (93.8)		
	60	4.10	2500 (67.0)	3500 (93.8)			
	80	5.17	2700 (72.4)				
	100	6.90	3500 (93.8)				
	125	8.60	3500 (93.8)				
11" WC Set (27 mBAR) 655-788-002 2" WC Droop	2	0.14			500 (13.4)	700 (18.8)	1200 (32.2)
	5	0.34			1100 (29.5)	1500 (40.2)	2100 (56.3)
	10	0.69			1750 (46.9)	2500 (67.0)	3500 (93.8)
	15	1.00		1200 (32.2)	2500 (67.0)	3400 (91.1)	3500 (93.8)
	25	1.70		1900 (50.9)	3500 (93.8)	3500 (93.8)	
	30	2.10	1500 (40.2)	2100 (56.3)	3500 (93.8)		
	40	2.80	1900 (50.9)	3200 (85.8)			
	60	4.10	2300 (61.6)	2620 (70.2)			
	80	5.17	2750 (73.7)				
	100	6.90	3400 (91.1)				
	125	8.60	3500 (93.8)				
20" WC Set (50 mBAR) 655-788-003 2" WC Droop	5	0.34				1000 (26.8)	1600 (42.9)
	10	0.69			1150 (30.8)	1850 (49.6)	2600 (69.7)
	15	1.00			1650 (44.2)	2700 (72.4)	3400 (91.1)
	25	1.70		1150 (30.8)	2700 (72.4)	3500 (93.8)	
	30	2.10	1200 (32.2)	1400 (37.5)	3200 (85.8)		
	40	2.80	1350 (36.2)	2000 (53.6)			
	60	4.10	1900 (50.9)	2900 (77.7)			
	80	5.17	2600 (69.7)				
	100	6.90	3000 (80.4)				
	125	8.60	3500 (93.8)				

1. Limited due to boost

- Shaded areas show where indicated droop would be exceeded regardless of capacity.
- Shaded areas show where maximum operating inlet pressure for a given port diameter is exceeded.

P303 Flow Capacities in SCFH (Nm³/h) of 0.6 Specific Gravity Natural Gas

Outlet Pressure, Spring Part Number, and Accuracy	Inlet Pressure		NPT 1-1/2 (DN40) & 2" (DN50) Body Size				
			Orifice Size, Inches (mm)				
	PSIG	BAR	3/16 (4.8)	1/4 (6.4)	3/8 (9.5)	1/2 (13)	3/4 (19)
5" WC Set (12 mBAR) 655-788-000 1" WC Droop	2	0.14			750 (20.1)	1150 (30.8)	1700 (45.6)
	5	0.34		700 (18.8)	1550 (41.5)	2250 (60.3)	3500 (93.8)
	10	0.69		1400 (37.5)	2600 (69.7)	3500 (93.8)	3500 (93.8)
	15	1.00	1080 (28.9)	1850 (49.6)	3500 (93.8)	3500 (93.8)	3500 (93.8)
	25	1.70	1450 (38.9)	2450 (65.7)	2300 (61.6)	2600 (69.7)	
	30	2.10	1600 (42.9)	2750 (73.7)	1900 (50.9)		
	60	4.10	2600 (69.7)	3500 (93.8)			
	80	5.17	3300 (88.4)				
	100	6.90	3500 (93.8)				
	125	8.60	3500 (93.8)				
7" WC Set (17 mBAR) 655-788-001 1" WC Droop	2	0.14					1400 (37.5)
	5	0.34			1200 (26.8)	2000 (53.6)	3200 (85.8)
	10	0.69		1000 (26.8)	2400 (64.3)	3500 (93.8)	3500 (93.8)
	15	1.00	1050 (28.1)	1400 (37.5)	3300 (88.4)	3500 (93.8)	3500 (93.8)
	25	1.70	1400 (37.5)	2400 (64.3)	3500 (93.8)	2600 (69.7)	
	30	2.10	1600 (42.9)	1700 (72.4)	2400 (64.3)		
	60	4.10	2600 (69.7)	3500 (93.8)			
	80	5.17	3300 (88.4)				
	100	6.90	3500 (93.8)				
	125	8.60	3500 (93.8)				
11" WC Set (27 mBAR) 655-788-002 2" WC Droop	2	0.14			500 (13.4)	800 (21.4)	1250 (33.5)
	5	0.34			1150 (30.8)	1700 (45.6)	2500 (67.0)
	10	0.69			2000 (53.6)	3100 (83.1)	3500 (93.8)
	15	1.00		1250 (33.5)	3000 (80.4)	3500 (93.8)	3500 (93.8)
	25	1.70		195 (52.3)	3500 (93.8)	3500 (93.8)	
	30	2.10	1500 (40.2)	2300 (61.6)	3500 (93.8)		
	40	2.80	1900 (50.9)	3200 (85.8)			
	60	4.10	2650 (71.0)	3500 (93.8)			
	80	5.17	3250 (87.1)				
	100	6.90	3500 (93.8)				
	125	8.60	3500 (93.8)				
20" WC Set (50 mBAR) 655-788-003 3" WC Droop	5	0.34				1050 (28.1)	1800 (48.2)
	10	0.69			1300 (34.8)	1900 (50.9)	3100 (83.1)
	15	1.00			1900 (50.9)	2850 (76.4)	3500 (93.8)
	25	1.70		1250 (33.5)	3100 (83.1)	3500 (93.8)	
	30	2.10	1300 (34.8)	1600 (42.9)	3500 (93.8)		
	40	2.80	1650 (44.2)	2200 (59.0)			
	60	4.10	2300 (61.6)	3300 (88.4)			
	80	5.17	2800 (75.0)				
	100	6.90	3200 (85.8)				
	125	8.60	3500 (93.8)				

1. Limited due to boost

- Shaded areas show where indicated droop would be exceeded regardless of capacity.
- Shaded areas show where maximum operating inlet pressure for a given port diameter is exceeded.

P303 Flow Capacities in SCFH (Nm³/h) of 0.6 Specific Gravity Natural Gas

Outlet Pressure, Spring Part Number, and Accuracy	Inlet Pressure		NPT 1-1/4 (DN32), 1-1/2 (DN40) & 2" (DN50) Body Sizes				
			Orifice Size, Inches (mm)				
	PSIG	BAR	3/16 (4.8)	1/4 (6.4)	3/8 (9.5)	1/2 (13)	3/4 (19)
1 PSIG Set (69 mBAR) 655-788-006 10% Droop	2	0.14	193 (5.2)	160 (4.3)	295 (7.9)	400 (10.7)	595 (15.9)
	5	0.34	300 (8.0)	381 (10.2)	440 (11.8)	748 (20.0)	1240 (33.2)
	10	0.69	450 (12.1)	465 (12.5)	690 (18.5)	1420 (38.1)	2200 (59.0)
	15	1.00	555 (14.9)	740 (19.8)	1290 (34.6)	2070 (55.5)	3350 (89.8)
	20	1.40	710 (19.0)	920 (24.7)	1880 (50.4)	2750 (73.7)	4500 (121.0)
	30	2.10	970 (26.0)	1160 (31.1)	3040 (81.5)	4180 (112.0)	5000 (134.0)
	40	2.80	1310 (35.1)	1620 (43.4)	4170 (112.0)	5000 (134.0)	5000 (134.0)
	60	4.10	1750 (46.9)	3300 (88.4)	5000 (134.0)	5000 (134.0)	
	80	5.17	2210 (59.2)	3400 (91.1)	5000 (134.0)		
	100	6.90	3100 (83.1)	3980 (107.0)			
	125	8.60	3760 (101.0)	3290 (88.2)			
3 PSIG Set (207 mBar) 655-788-007 10% Droop	4	0.28	303 (8.2)	207 (5.6)	478 (12.8)	548 (14.7)	1060 (28.4)
	5	0.34	374/10.0)	452 (12.1)	606 (16.2)	905 (24.3)	1290 (34.6)
	10	0.69	515 (13.8)	670 (18.0)	1130 (30.3)	1740 (46.6)	2450 (65.7)
	15	1.00	735 (19.7)	905 (24.3)	1680 (45.0)	2250 (60.3)	3230 (86.6)
	20	1.40	970 (26.0)	1030 (37.6)	2000 (53.6)	2770 (74.2)	4130 (111.0)
	30	2.10	1420 (38.1)	1755 (47.0)	2970 (79.6)	3870 (104.0)	5000 (134.0)
	40	2.80	1700 (45.6)	2200 (59.0)	4030 (108.0)	5000 (134.0)	5000 (134.0)
	60	4.10	2390 (64.1)	3070 (82.3)	5000 (134.0)	5000 (134.0)	
	80	5.17	3030 (81.2)	4000 (107.0)	5000 (134.0)		
	100	6.90	3550 (95.1)	4380 (117.0)			
	125	8.60	4180 (112.0)	4970 (133.0)			
1 PSIG Set (69 mBAR) 655-788-006 20% Droop	2	0.14	265 (7.1)	180 (4.8)	505 (13.5)	683 (18.3)	1060 (28.4)
	5	0.34	465 (12.5)	425 (11.4)	980 (26.3)	1390 (37.3)	2070 (55.5)
	10	0.69	730 (19.6)	905 (24.3)	1580 (42.3)	2270 (60.8)	3360 (90.0)
	15	1.00	1030 (27.6)	1360 (36.4)	2270 (603.8)	3160 (84.7)	4500 (121.0)
	20	1.40	1230 (86.6)	1660 (44.5)	3030 (81.2)	4000 (107.0)	5000 (134.0)
	30	2.10	1570 (42.1)	2320 (62.2)	4320 (116.0)	5000 (134.0)	5000 (134.0)
	40	2.80	1940 (52.0)	2940 (78.8)	5000/134.0)	5000 (134.0)	5000 (134.0)
	60	4.10	2650 (71.0)	4180 (112.0)	5000 (134.0)	5000 (134.0)	
	80	5.17	3230 (86.6)	4440 (119.0)	5000 (134.0)		
	100	6.90	3910 (105.0)	5000 (134.0)			
	125	8.60	4440 (119.0)	5000 (134.0)			
3 PSIG Set (207 mBar) 655-788-007 10% Droop	4	0.28	394 (10.6)	490 (13.1)	955 (25.6)	1290 (34.6)	1940 (52.0)
	5	0.34	485 (13.0)	645 (17.3)	1160 (31.1)	1610 (43.1)	2400 (64.3)
	10	0.69	825 (22.1)	1320 (35.4)	2040 (54.7)	2940 (78.8)	4260 (114.0)
	15	1.00	1060 (28.4)	1740 (46.6)	2640 (76.1)	3800 (102.0)	5000 (134.0)
	20	1.40	1250 (33.5)	2070 (55.5)	3430 (91.9)	4640 (124.0)	5000 (134.0)
	30	2.10	1570 (42.1)	2710 (72.6)	4780 (128.0)	5000 (134.0)	5000 (134.0)
	40	2.80	1940 (52.0)	3290 (88.2)	5000 (134.0)	5000 (134.0)	5000 (134.0)
	60	4.10	2630 (70.5)	4490 (120.0)	5000 (134.0)	5000 (134.0)	5000 (134.0)
	80	5.17	3290 (88.2)	5000 (134.0)	5000 (134.0)		
	100	6.90	4000 (107.0)	5000 (134.0)			
	125	8.60	4830 (129.0)	5000 (134.0)			

1. Limited due to boost

- Shaded areas show where indicated droop would be exceeded regardless of capacity.
- Shaded areas show where maximum operating inlet pressure for a given port diameter is exceeded.

P303 Parts List

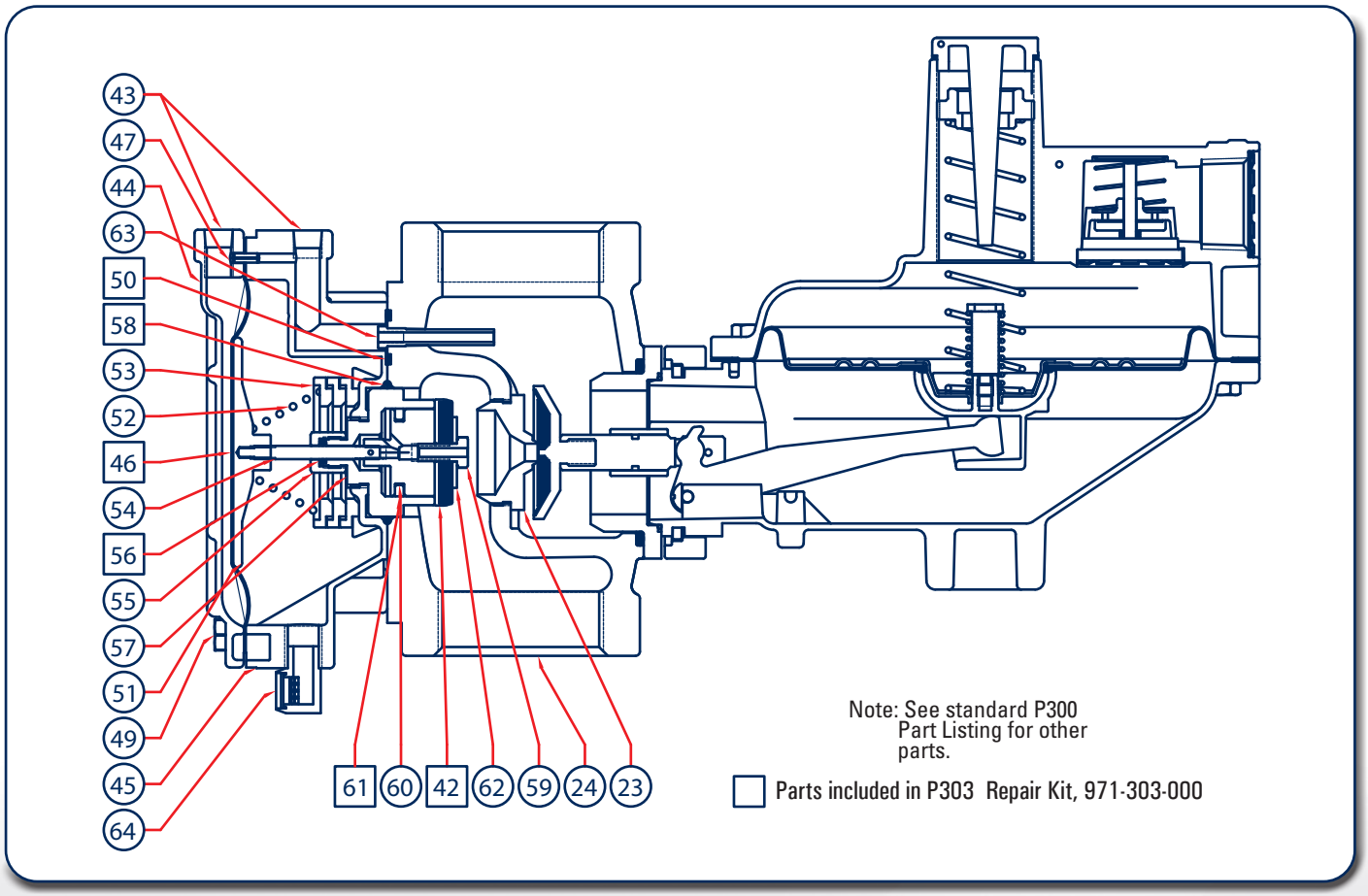

Item	Description	Qty.	Part Number
	Orifices		
23	1/4" Aluminum	1	688-061-000
	3/8" Aluminum	1	688-061-001
	1/2" Aluminum	1	688-061-002
	3/4" Aluminum	1	688-061-003
	Body		
24	Iron 1.5" NPT	1	664-396-000
	Iron 1.5" x 2" NPT	1	664-396-001
	Iron 2" NPT	1	664-384-000
	Iron 2" , 125 FF	1	664-385-000
	P303 Monitor Parts Only - See P303 for other Parts		
42	Disk Holder Assembly	1	822-044-000
43	Pipe Plug	2	639-000-054
44	Monitor Spring Case	1	604-264-000
45	Monitor Lower Case	1	629-237-000
46	Diaphragm	1	618-101-000
47	Roll Pin	1	635-074-000
48	Cap Screw (Not Shown)	4	648-466-009

Item	Description	Qty.	Part Number
	P303 Monitor Parts Only - See P300 for other Parts		
49	Cap Screw	8	648-466-000
50	O-ring	1	649-000-185
51	Diaphragm Plate	1	638-079-000
	Monitor Springs		
52	Green Spring (See Monitor Data Table)	1	655-746-000
	Red Spring (See Monitor Data Table)	1	655-746-001
	Blue Spring (See Monitor Data Table)	1	655-746-002
	Silver Spring (See Monitor Data Table)	1	655-746-003
53	Lower Spring Seat (See Monitor Data Table)	1 or 2	650-178-000
54	Piston Assembly	1	809-237-000
55	O-ring Retainer	1	643-206-000
56	Piston Assembly O-ring	1	649-000-001
57	Piston Guide	1	626-112-000
58	Piston Guide O-ring	1	649-309-003
59	Disk Holder Screw	1	648-545-000
60	Piston Ring Expander	1	644-062-000
61	Piston Ring	1	644-063-000
62	Washer	1	662-236-002
63	Pilot Tube	1	660-082-000
64	Vent Assembly	1	836-004-001

Interchangeability between the BelGAS P203 series and the P303 series

The unique feature about the BelGAS P303 regulator is that it utilizes the BelGAS P203 series bodies using a simple adaptor ring. The simplicity of down-sizing a system when a BelGAS P203 unit is installed is as easy as removing the 2 body-to-head bolts and installing a BelGAS P303 head with the appropriate adaptor and bolts. Or, if a 1.5″ x 2″ or 2″ x 2″ BelGAS P303 is installed, the BelGAS P303 head can be removed and a BelGAS P203 head installed to up-size your system.

It is important to know, a P303 head can be mounted to a P203 2″ body with the appropriate adaptor and bolts. A P200 head cannot be mounted to any existing P303 body unless confirmed to be a BelGAS 2″ P203/P303 body.

Remove the BelGAS 2″ P303 head

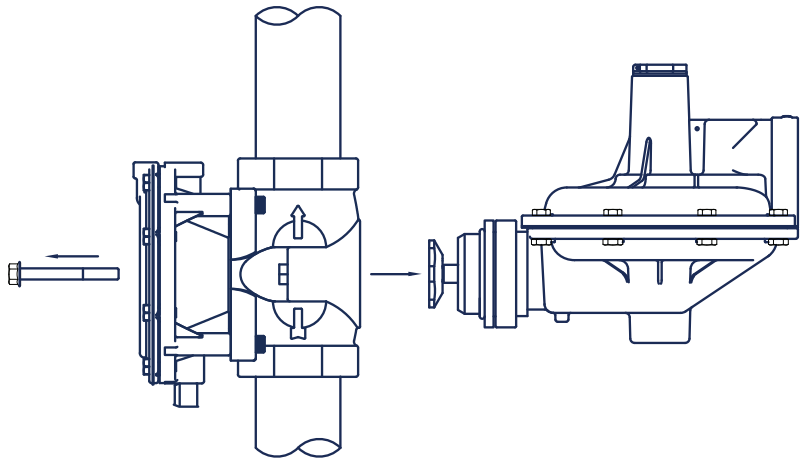

1. REMOVE BOLTS AND P303 FROM BODY, AND REMOVE FROM LINE.

Install the BelGAS P203 head

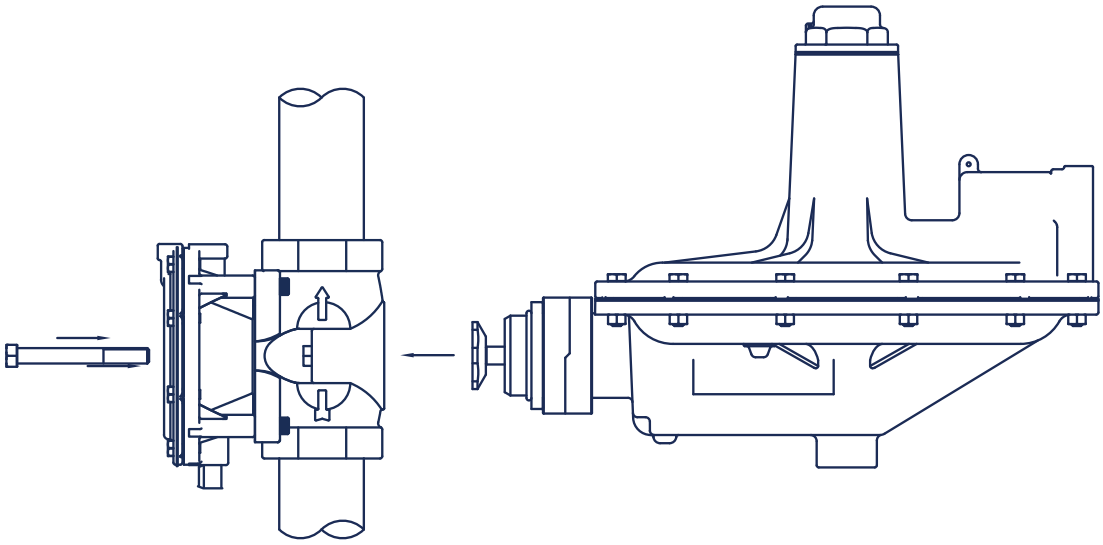

2. USE BOLTS SUPPLIED WITH HEAD ONLY VERSION TO ATTACH TO BODY ALREADY INSTALLED.

P600 Pressure Regulator

The BelGAS P600 series is a direct operated, pressure reducing regulator that can be used as a pressure loaded regulator, switching valve, or monitoring regulator. Available with a non-relieving option, an internal relief valve option or monitoring regulator option, the P600 is designed to maintain a constant, preset downstream pressure.

Applications

- Industrial and Commercial Gas Regulation
- Compressors
- Gas Engines

Materials of Construction

Adjusting Screw	Zinc
Body	Cast Iron
Bonnet	Cast Iron
Closing Cap	Acetal
Diaphragm	Nitrile
Housing	Cast Iron
Molded Seat Assembly	Nitrile / Aluminium

P600 Series Maximum Inlet Pressures

Orifice size, Inches (mm)	Table 1: Maximum Operation Inlet Pressure, PSIG (bar)		
	With 1.2 PSIG (0.08 bar) or Less Outlet Pressure Setting	With 1.2 to 2.5 PSIG (0.08 to 0.17 bar) Outlet Pressure Setting	With 2.5 to 7 PSIG (0.17 to 0.48 bar) Outlet Pressure Setting
1/8 (3.17)	150 (10.3)	150 (10.3)	150 (10.3)
3/16 (4.76)	150 (10.3)	150 (10.3)	150 (10.3)
1/4 (6.35)	75 (5.17)	150 (10.3)	150 (10.3)
3/8 (9.53)	35 (2.41)	60 (4.14)	60 (4.14)
1/2 (12.7)	8 (0.55)	10 (0.69)	12 (0.83)
9/16 (14.3)	5 (0.34)	6 (0.41)	8 (0.55)

Specifications

Maximum Inlet	See Table 1
Maximum Emergency Outlet	10 PSIG
Pressure Ranges	See Table 2
Port Sizes	3/4 NPT
	1 NPT
Orifice Sizes	1/8"
	3/16"
	1/4"
	3/8"
	1/2"
	9/16"
End Connections	NPT
Temperature Range	-20˚F to 180˚F
	-29˚C to 82˚C
Approx. Weight	14 lbs. (6.4 kg)
Spring Case Vent Connection	1/4 NPT
Diaphragm Case (Control Line) Connection	1/2 NPT

P600 Series Range Springs

Table 2			
Spring Ranges		Spring Color	Part Number
WC or PSIG	BAR		
4 - 8" WC	.01 to .02	Red	655-732-000
7 - 16" WC	.017 to .04	Olive	655-732-001
15" WC to 1.2 PSIG	.037 to .08	Yellow	655-732-002
1.2 - 2.5 PSIG	.08 to .17	Light Green	655-732-003
2.5 - 4.5 PSIG	.17 to .31	Light Blue	655-732-004
4.5 -7 PSIG	.31 to .48	Black	655-732-005

P600 Regulator Rebuild Kits

	Kit Includes	Part Number
O & M Version	Diaphragm, body O-ring, insert O-ring, seat assembly, cotter pin, seat stem O-ring, throat seal O-ring	971-600-000
R Version	Diaphragm, body O-ring, insert O-ring, seat assembly, cotter pin	971-600-001

P600 Part Matrix

P600								0	
									Body
	06								3/4 NPT
	08								1 NPT
									Spring Range
		008							4-8 WC
		016							7-16 WC
		001							15 WC - 1.2 PSIG
		002							1.2 - 2.5 PSIG
		004							2.5 - 4.5 PSIG
		007							4.5 - 7 PSIG
									Options
			0						None
			M						Monitor Version
			R						Relieving Version
									Vent Assembly
				0					Up
				1					Down
									Orifice
					2				1/8"
					3				3/16"
					4				1/4"
					6				3/8"
					8				1/2"
					9				9/16"
									Body Position
						1			Up (Standard)
						2			Down
						3			Right
						4			Left
									Bonnet Vent Orientation
							C		12 O'Clock (Standard)
							D		3 O'Clock
							E		6 O'Clock
							F		9 O'Clock
								0	

P600 Internal Relief Discharge

Spring Range with Spring Case Upward	Internal Relief Start-to-Discharge. Pressure Above Set Pressure
4 to 8 inches WC (10 to 20 mbar)	10 to 24 inches WC (25 to 60 mbar)
7 to 16 inches WC (17 to 40 mbar)	10 to 26 inches WC (25 to 65 mbar)
15 inches WC to 1.2 PSIG (37 to 83 mbar)	10 to 26 inches WC (25 to 65 mbar)
1.2 to 2.5 PSIG (0.08 to 0.7 bar)	0.5 to 2 PSIG (0.034 to 0.14 bar
2.5 to 4.5 PSIG (0.17 to 0.31 bar)	0.5 to 3 PSIG (0.034 to 0.21 bar)
4.5 to 7 PSIG (0.31 to 0.48 bar)	1 to 4 PSIG (0.069 to 0.28 bar)
(Actual outlet pressure maybe lower with spring case downward.)	

P600 Body Positions

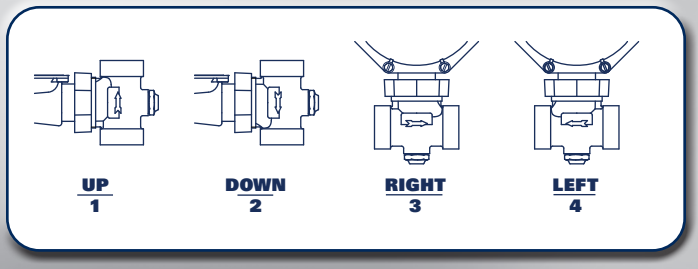

P600 Vent Positions

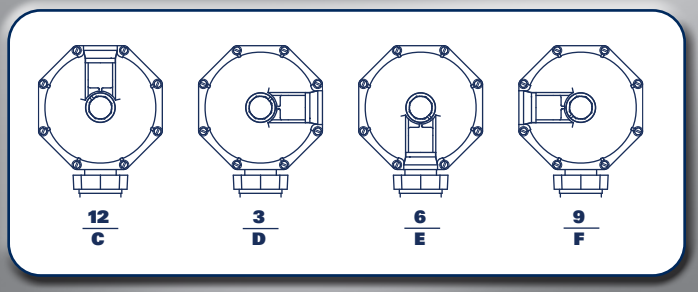

P600 Dimensions

Body Size	A	B	C
Inches NPT	Inches	Inches	Inches
3/4	4	6.25	10.7
1	4	6.25	10.7

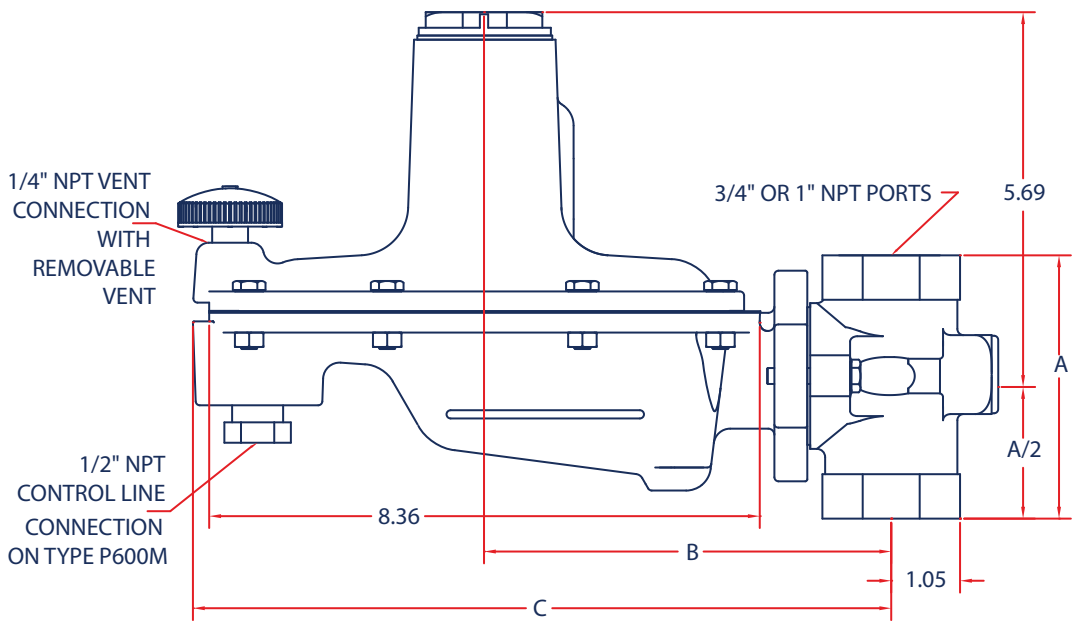

P600 Flow Capacities in SCFH (Nm³/h) of 0.6 Specific Gravity Natural Gas

Outlet Pressure Range	Offset from Setpoint	Outlet Pressure Setting	Inlet Pressure		NPT 3/4 Body Size					
					Orifice Size, Inches (mm)					
			PSIG	BAR	1/8 (3.2)	3/16 (4.8)	1/4 (6.4)	3/8 (9.5)	1/2 (12.7)	9/16 (14.3)
4 to 8 inches WC (10 to 20 mbar)	1 inch WC (2 mbar)	7 inches WC (17 mbar)	1	0.069	90 (2.42)	170 (4.50)	230 (6.61)	250 (6.57)	410 (11.0)	440 (11.8)
			5	0.34	220 (5.87)	280 (7.61)	450 (12.1)	490 (13.1)	520 (13.8)	970 (25.9)
			8	0.55	230 (6.22)	480 (12.8)	530 (14.2)	540 (14.5)	590 (15.9)	
			20	1.4	520 (13.8)	600 (16.2)	620 (16.6)	650 (17.3)		
			35	2.4	660 (17.6)	670 (18.0)	840 (22.5)	900 (24.2)		
			75	5.2	770 (20.7)	840 (22.5)	960 (25.6)			
			150	10.3	1680 (44.9)	2310 (61.9)				
7 to 16 inches WC (17 to 40 mbar)	1 inch WC (2 mbar)	11 inches WC (27 mbar)	1	0.069	90 (2.42)	130 (3.46)	160 (4.15)	190 (5.20)	230 (6.22)	250 (6.57)
			5	0.34	160 (4.15)	250 (6.57)	280 (7.61)	350 (9.33)	530 (14.2)	750 (20.0)
			8	0.55	170 (4.50)	350 (9.33)	430 (11.4)	450 (12.1)	540 (14.5)	
			20	1.4	350 (9.33)	490 (13.1)	590 (15.9)	610 (16.2)		
			35	2.4	520 (13.8)	530 (14.2)	620 (16.6)	650 (17.3)		
			75	5.2	650 (17.3)	660 (17.6)	940 (25.2)			
			150	10.3	1680 (44.9)	2060 (55.3)				
15 inches WC to 1.2 PSIG (37 to 83 mbar)	5-1/2 inches WC (14 mbar)	15 inches WC (37 mbar)	2	0.14	90 (2.42)	340 (8.98)	500 (13.5)	900 (24.2)	1100 (29.4)	1150 (30.8)
			6	0.41	250 (6.57)	540 (14.5)	930 (24.9)	1640 (43.9)	2100 (56.4)	
			10	0.69	340 (8.98)	800 (21.4)	1390 (37.0)	1940 (51.9)		
			30	2.1	680 (18.3)	1450 (38.7)	2390 (64.0)	2450 (65.7)		
			60	4.1	1160 (31.1)	2460 (66.0)	3480 (93.3)			
			150	10.3	2570 (68.8)	2710 (72.6)				
		1.2 PSIG (83 mbar)	2	0.14	90 (2.42)	260 (6.91)	410 (11.1)	600 (16.2)	810 (21.8)	700 (18.7)
			6	0.41	250 (6.57)	460 (12.4)	700 (18.7)	1290 (34.6)	1420 (38.0)	
			10	0.69	310 (8.31)	660 (17.6)	1020 (27.3)	1420 (38.0)		
			30	2.1	670 (18.0)	1109 (29.7)	2060 (55.3)	2430 (65.0)		
			60	4.1	1140 (30.4)	2180 (58.4)	3350 (89.9)			
			150	10.3	2480 (66.4)	2650 (70.9)				
1.2 to 2.5 PSIG (83 to 172 mbar)	0.2 PSIG (14 mbar)	1.2 PSIG (83 mbar)	2	0.14	120 (3.11)	170 (4.50)	220 (5.87)	350 (9.33)	490 (13.1)	520 (13.8)
			6	0.41	180 (4.85)	340 (8.98)	450 (12.1)	740 (19.7)	850 (22.8)	1070 (28.7)
			10	0.69	190 (5.20)	440 (11.8)	590 (15.9)	1010 (27.0)	1170 (31.5)	
			30	2.1	560 (14.9)	900 (24.2)	1550 (41.5)	1720 (46.0)		
			60	4.1	860 (23.2)	1110 (29.7)	2480 (66.4)	2340 (62.6)		
			150	10.3	1990 (53.3)	3480 (93.3)	3500 (93.8)			
		2.5 PSIG (172 mbar)	6	0.41	140 (3.81)	190 (5.20)	260 (6.91)	450 (12.1)	590 (15.9)	680 (18.3)
			10	0.69	170 (4.50)	340 (8.98)	490 (13.1)	570 (15.2)	860 (23.2)	
			30	2.1	430 (11.4)	660 (17.6)	980 (26.3)	1030 (27.7)		
			60	4.1	750 (20.0)	850 (22.8)	1940 (51.9)	2250 (60.2)		
			150	10.3	1480 (39.8)	2320 (62.2)	3350 (89.9)			
2.5 to 4.5 PSIG (172 to 310 mbar)	0.3 PSIG (21 mbar)	2.5 PSIG (172 mbar)	4	0.26	130 (3.46)	180 (4.85)	190 (5.20)	310 (8.31)	370 (10.0)	480 (12.8)
			8	0.55	140 (3.81)	280 (7.61)	360 (9.67)	520 (13.8)	710 (19.0)	800 (21.4)
			12	0.82	190 (5.20)	360 (9.67)	490 (13.1)	680 (18.3)	930 (24.9)	
			30	2.1	430 (11.4)	620 (16.6)	900 (24.2)	1110 (29.7)		
			60	4.1	660 (17.6)	1010 (27.0)	1730 (46.3)	1830 (49.1)		
			150	10.3	1570 (42.2)	2060 (55.3)	4620 (124)			
		4.5 PSIG (310 mbar)	8	0.55	120 (3.11)	190 (5.20)	250 (6.57)	400 (10.7)	520 (13.8)	540 (14.5)
			12	0.82	160 (4.15)	210 (5.52)	320 (8.66)	530 (14.2)	720 (19.3)	
			30	2.1	300 (7.96)	460 (12.4)	760 (20.4)	830 (22.1)		
			60	4.1	590 (15.9)	810 (21.8)	1230 (32.9)	1340 (36.0)		
			150	10.3	1230 (32.9)	1640 (43.9)	3610 (96.8)			
4.5 to 7 PSIG (310 to 483 mbar)	0.7 PSIG (48 mbar)	4.5 PSIG (310 mbar)	9	0.62	190 (5.20)	310 (8.31)	430 (11.4)	620 (16.6)	930 (24.9)	990 (26.6)
			12	0.83	210 (5.52)	400 (10.7)	560 (14.9)	810 (21.8)	1150 (30.8)	
			30	2.1	520 (13.8)	860 (23.2)	1100 (29.4)	1810 (48.4)		
			60	4.1	860 (23.2)	1520 (40.8)	2050 (55.0)	2710 (72.6)		
			150	10.3	1960 (52.6)	3480 (93.3)	5040 (135)			
		7 PSIG (483 mbar)	9	0.62	160 (4.15)	210 (5.52)	270 (7.26)	520 (13.8)	620 (16.6)	660 (17.6)
			12	0.83	190 (5.20)	310 (8.31)	370 (10.0)	650 (17.3)	860 (23.2)	
			30	2.1	370 (9.92)	700 (18.7)	900 (24.2)	1330 (35.6)		
			60	4.1	800 (21.4)	1290 (34.6)	1720 (46.0)	2450 (65.7)		
			150	10.3	1910 (51.2)	3350 (89.9)	4050 (109)			

- Shaded areas show where maximum operating inlet pressure for a given port diameter is exceeded.

P600 Flow Capacities in SCFH (Nm³/h) of 0.6 Specific Gravity Natural Gas

Outlet Pressure Range	Offset from Setpoint	Outlet Pressure Setting	Inlet Pressure		NPT 1 Body Size					
					Orifice Size, Inches (mm)					
			PSIG	BAR	1/8 (3.2)	3/16 (4.8)	1/4 (6.4)	3/8 (9.5)	1/2 (12.7)	9/16 (14.3)
4 to 8 inches WC (10 to 20 mbar)	1 inch WC (2 mbar)	7 inches WC (17 mbar)	1	0.069	90 (2.42)	220 (5.87)	250 (6.57)	300 (7.96)	410 (11.1)	530 (14.2)
			5	0.34	220 (5.87)	430 (11.4)	450 (12.1)	1140 (30.4)	1900 (50.8)	1920 (51.5)
			8	0.55	230 (6.22)	490 (13.1)	530 (14.2)	2140 (57.4)	2360 (63.3)	
			20	1.4	520 (13.8)	970 (25.9)	1810 (48.4)	1170 (31.5)[1]		
			35	2.4	710 (19.0)	1480 (39.8)	2300 (61.5)[1]	930 (24.9)[1]		
			75	5.2	1030 (27.7)	1100 (29.4)[1]	1390 (37.3)[1]			
			150	10.3	1680 (44.9)[1]	1160 (31.1)[1]				
7 to 16 inches WC (17 to 40 mbar)	1 inch WC (2 mbar)	11 inches WC (27 mbar)	1	0.069	90 (2.42)	160 (4.15)	170 (4.50)	210 (5.52)	230 (6.22)	250 (6.57)
			5	0.34	160 (4.15)	300 (7.96)	310 (8.31)	520 (13.8)	620 (16.6)	1160 (31.1)
			8	0.55	170 (4.50)	360 (9.67)	430 (11.4)	1160 (31.1)	1460 (39.1)	
			20	1.4	350 (9.33)	580 (15.6)	780 (20.7)	1630 (43.6)		
			35	2.4	560 (14.9)	1030 (27.7)	2840 (37.5)	1190 (31.8)[1]		
			75	5.2	1230 (32.9)	1290 (34.6)	1510 (40.4)[1]			
			150	10.3	1740 (46.7)	1240 (33.2)[1]				
15 inches WC to 1.2 PSIG (37 to 83 mbar)	5-1/2 inches WC (14 mbar)	15 inches WC (37 mbar)	2	0.14	90 (2.42)	460 (12.3)	500 (13.4)	1100 (29.5)	1160 (31.1)	1330 (34.8)
			6	0.41	250 (6.70)	750 (20.1)	930 (24.9)	2500 (67.0)	2800 (75.0)	
			10	0.69	340 (9.11)	920 (24.7)	1590 (42.6)	3250 (87.1)		
			30	2.1	680 (18.2)	1560 (41.8)	2830 (75.8)	5460 (146)		
			60	4.1	1160 (31.1)	2550 (68.3)	4620 (124)			
			150	10.3	2570 (2.42)	2770 (74.2)				
		1.2 PSIG (83 mbar)	2	0.14	90 (2.42)	400 (10.7)	460 (12.3)	820 (22.0)	840 (22.5)	900 (24.1)
			6	0.41	250 (6.57)	630 (16.9)	700 (18.8)	1550 (41.5)	1610 (43.1)	
			10	0.69	320 (8.58)	860 (23.0)	1020 (27.3)	2320 (62.2)		
			30	2.1	670 (18.0)	1540 (41.3)	2550 (68.3)	4390 (118)		
			60	4.1	1140 (30.6)	2550 (68.3)	4190 (112)			
			150	10.3	2570 (68.9)	3100 (83.1)				
1.2 to 2.5 PSIG (83 to 172 mbar)	0.2 PSIG (14 mbar)	1.2 PSIG (83 mbar)	2	0.14	120 (3.11)	210 (5.52)	230 (6.22)	360 (9.65)	620 (16.6)	660 (17.6)
			6	0.41	180 (4.85)	340 (8.98)	450 (12.1)	750 (20.1)	8810 (23.5)	1080 (29.1)
			10	0.69	190 (5.20)	560 (14.9)	650 (17.3)	1150 (30.8)	1750 (47.0)	
			30	2.1	630 (16.9)	1230 (32.9)	1600 (42.9)	1910 (51.2)		
			60	4.1	1010 (27.0)	2450 (65.7)	3600 (96.5)	2420 (64.9)		
			150	10.3	2440 (65.3)	3480 (93.3)	3870 (104)			
		2.5 PSIG (172 mbar)	6	0.41	140 (3.81)	260 (6.91)	270 (7.26)	500 (13.4)	670 (18.0)	680 (18.3)
			10	0.69	180 (4.85)	450 (12.1)	490 (13.1)	710 (19.0)	860 (23.2)	
			30	2.1	570 (15.2)	720 (19.3)	1030 (27.7)	1640 (44.0)		
			60	4.1	850 (22.8)	1830 (49.1)	2520 (67.4)	3130 (83.9)		
			150	10.3	2190 (58.8)	3350 (89.9)	3480 (93.3)			
2.5 to 4.5 PSIG (172 to 310 mbar)	0.3 PSIG (21 mbar)	2.5 PSIG (172 mbar)	4	0.26	140 (3.81)	180 (4.85)	190 (5.20)	410 (11.1)	430 (11.4)	480 (12.8)
			8	0.55	180 (4.85)	320 (8.66)	360 (9.67)	710 (19.0)	740 (19.7)	900 (24.2)
			12	0.82	190 (5.20)	400 (10.7)	490 (13.1)	930 (24.9)	960 (25.6)	
			30	2.1	430 (11.4)	620 (16.6)	900 (24.2)	1830 (49.1)		
			60	4.1	660 (17.6)	1610 (43.2)	1740 (46.7)	2970 (79.6)		
			150	10.3	2010 (53.9)	4090 (110)	6660 (178)			
		4.5 PSIG (310 mbar)	8	0.55	120 (3.11)	190 (5.20)	250 (6.57)	490 (13.1)	520 (13.8)	540 (14.5)
			12	0.82	160 (4.15)	210 (5.52)	320 (8.66)	610 (16.2)	850 (22.8)	
			30	2.1	390 (10.4)	520 (13.8)	760 (20.4)	1360 (36.3)		
			60	4.1	630 (16.9)	840 (22.5)	1230 (32.9)	2580 (69.1)		
			150	10.3	1390 (37.3)	2880 (77.1)	4990 (134)			
4.5 to 7 PSIG (310 to 483 mbar)	0.7 PSIG (48 mbar)	4.5 PSIG (310 mbar)	9	0.62	210 (5.52)	310 (8.31)	430 (11.4)	770 (20.6)	970 (25.9)	1050 (28.0)
			12	0.83	230 (6.22)	400 (10.7)	560 (14.9)	1010 (27.0)	1290 (34.6)	
			30	2.1	520 (13.8)	860 (23.2)	1100 (29.4)	2080 (55.7)		
			60	4.1	880 (23.5)	1520 (40.8)	2050 (55.0)	3650 (97.8)		
			150	10.3	2060 (55.3)	3510 (94.0)	6000 (161)			
		7 PSIG (483 mbar)	9	0.62	160 (4.15)	210 (5.52)	270 (7.26)	590 (15.9)	620 (16.6)	660 (17.6)
			12	0.83	210 (5.52)	310 (8.31)	370 (10.0)	770 (20.7)	890 (23.6)	
			30	2.1	370 (10.0)	700 (18.7)	900 (24.2)	1650 (44.2)		
			60	4.1	800 (21.4)	1290 (34.6)	1720 (46.0)	2760 (74.0)		
			150	10.3	2010 (53.9)	3390 (90.9)	4140 (111)			

1. Limited due to boost

- Shaded areas show where maximum operating inlet pressure for a given port diameter is exceeded.

P600 Parts List

Item	Description		Part Number
1	3/4" Iron	1	664-318-000
	1" NPT - Iron		664-318-001
2	Body Bolts - Plated Steel	2	648-466-006
3	Bonnet - Iron	1	604-559-000
4	Lower Casing - Iron	1	629-232-000
5	Orifices	1	
	1/8" Aluminum		688-013-004
	3/16" Aluminum		688-013-003
	1/4" Aluminum		688-013-002
	3/8" Aluminum		688-013-001
	1/2" Aluminum		688-013-000
	9/16" Aluminum		688-018-001
6	Range Springs	1	
	4" - 8" WC - Red, Plated Steel		655-732-000
	7" - 16" WC - Olive Drab, Plated Steel		655-732-001
	15" WC - 1.2 PSIG - Yellow, Plated Steel		655-732-002
	1.2 PSIG - 2.5 PSIG - Light Green, Plated Steel		655-732-003
	2.5 PSIG - 4.5 PSIG - Light Blue, Plated Steel		655-732-004
	4.5 PSIG - 7 PSIG - Black, Plated Steel		655-732-005
7	Diaphragm Heads	1	
	Diaphragm Head - O & M Versions - Stainless Steel		628-281-000
	Diaphragm Head - R Version Only - Plated Steel		628-281-001
8	Pusher Post	1	
	Pusher Post - O & M Versions - Aluminum		637-329-000
	Pusher Post - R Version - Zamak		637-329-001
9	Diaphragms	1	
	Diaphragm - Nitrile - O & M Versions		618-095-000
	Diaphragm - Nitrile - R Version Only		618-095-001
10	Body O-ring - Nitrile	1	649-309-001
11	Insert O-Ring - Nitrile	1	649-309-002
12	Seat Assembly - Nitrile	1	822-023-002
13	Seat Stem - Anodized Aluminum	1	689-008-000
14	Cotter Pin (Not Shown) - Stainless Steel	1	635-000-004
15	Lever Assembly - Plated Steel	1	827-014-000
16	Lever Screw - Plated Steel	2	648-000-383
17	Seat Assembly Guide Insert - Aluminum	1	626-108-000
18	Bonnet Cap - Plastic	1	610-056-000
19	Build Screw Nuts - Plated Steel	8	634-000-038
20	Build Screws - Plated Steel	8	648-000-030

P600 R

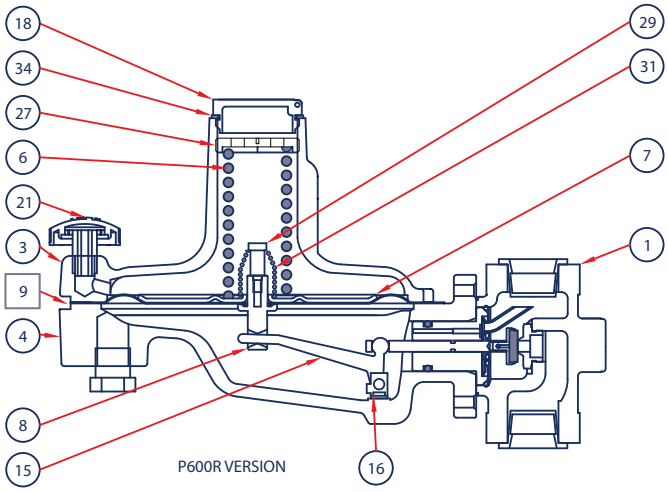

☐ Parts included in P600 R Repair Kit, 971-600-001

P600 M

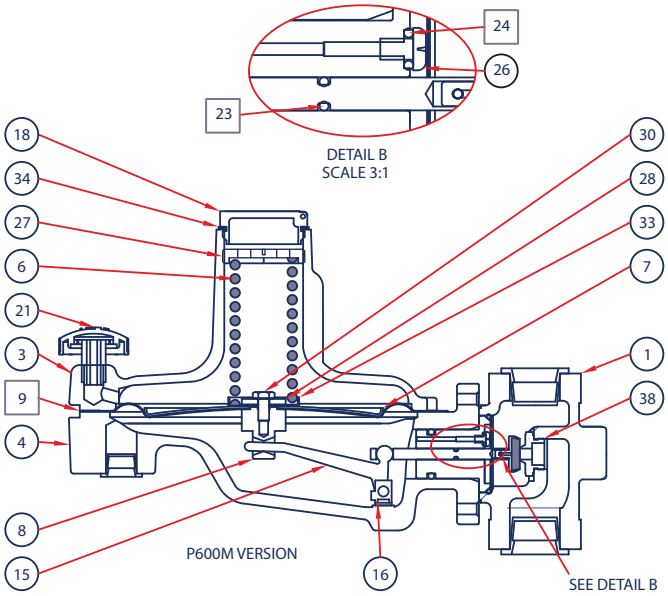

☐ Parts included in P600 O and M Repair Kit, 971-600-000

P600

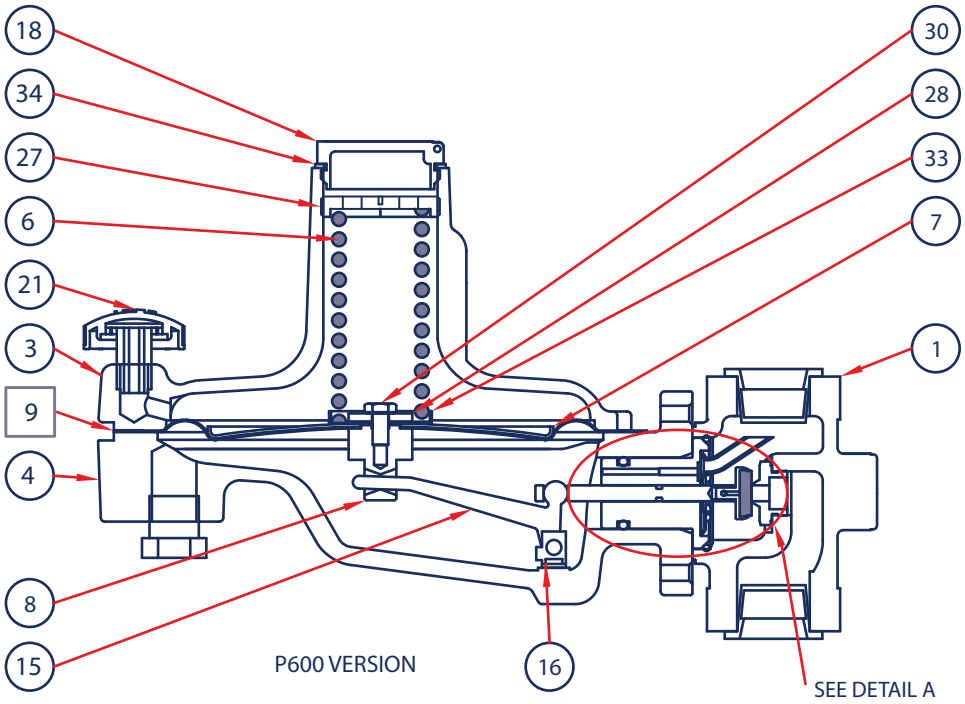

☐ Parts included in P600 O and M Repair Kit, 971-600-000

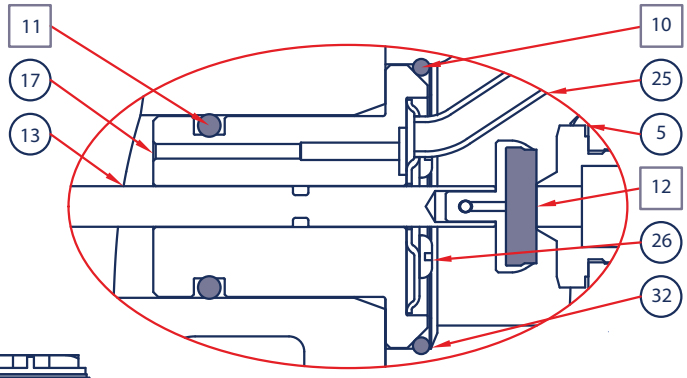

DETAIL A
SCALE 3:1

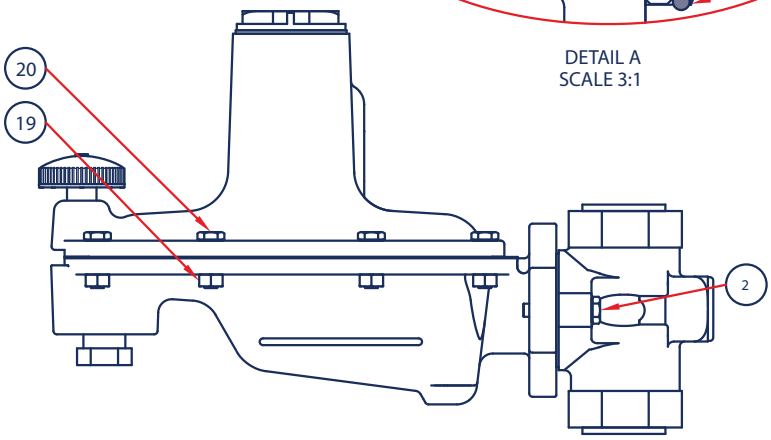

P143 Pressure Regulator

- Versatile
- Control Accuracy
- Compact Design
- Low Pressure Cut-off

The Type P143 pressure regulator is ideal for natural gas, air, propane and general purpose gas pressure regulation. Uses include commercial, residential and light industrial for burners and unit heaters. The P143 has an internal relief device and is available in the low pressure cut off – LPCO – version.

Applications

Applicable to a wide range of gaseous fluids, including air, natural gas and propane. Can be used as a LP regulator.

Materials of Construction

	P143
Body, Bonnet	Iron, Aluminum
Diaphragm	Nitrile
Diaphragm Assembly	Zinc/Nitrile
Gaskets	Non-asbestos, CGR 2750
Pin	Stainless Steel
Vent screen	Stainless Steel
Spring	Zinc-Plated Steel
Diaphragm Piston	Zinc-Plated Steel

Max Inlet Pressure (PSIG)

Orifice	LPCO	Standard
1/8		125
3/16		125
1/4	60	60
5/16	40	40
3/8	25	40
7/16	15	—
1/2		20
5/8		10

P143 Body Positions

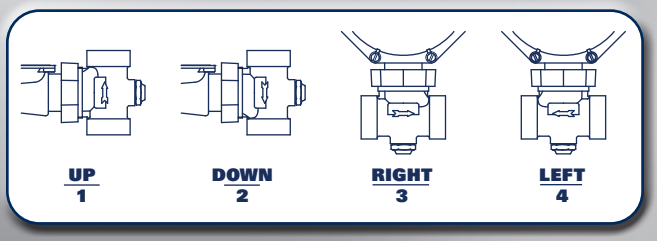

P143 Vent Positions

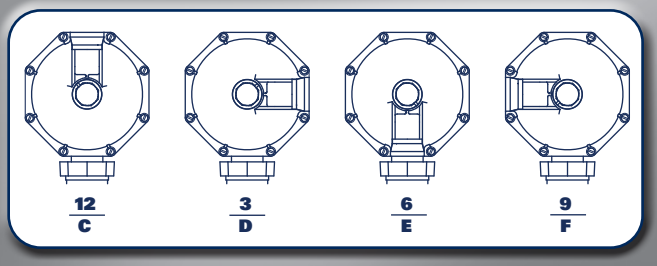

Specifications

	P143	
Inlet / Outlet	3/4" x 3/4", 3/4" x 1", 1" x 1", 1" x 1-1/4", 1-1/4" x 1-1/4"	
Maximum allowable inlet pressure	See Chart	
Temperature Range	-20˚F to 150 ˚F	
Approximate Weight	5.63 lb.	2.6 kg.

P143 Part Matrix

P143							**0**	**0**	
	C								Low Pressure Cut Off
	S								Standard
									Body Size
		06							3/4 x 3/4 NPT Ports
		07							3/4 x 1 NPT Ports
		08							1 x 1 NPT Ports
		09							1 x 1-1/4 NPT Ports
		12							1-1/4 x 1-1/4 NPT Ports
									Spring Ranges
			020						Red Spring LPCO 4.5" – 7.5" WC / Red Spring Standard 3.5" – 6.5" WC
			040						Blue Spring LPCO 6"– 9.5" WC / Blue Spring Standard 5"– 8.5" WC
			060						Green Spring LPCO 7.5" – 15" WC / Green Spring Standard 6" – 14" WC
			080						Orange Spring LPCO 13.5" – 29" WC / Orange Spring Standard 12" – 33" WC
			100						Purple Spring 1/2 – 2 PSIG (Standard Only)
			120						Yellow Spring 1/2 – 3 PSIG (Standard Only)
			140						Black Spring 2 – 6 PSIG (Standard Only)
									Orifice Size
				2					1/8" (Standard Only)
				3					3/16" (Standard Only)
				4					1/4"
				5					5/16"
				6					3/8"
				7					7/16" (LPCO Only)
				8					1/2" (Standard Only)
				A					5/8" (Standard Only)
									Body Position
					1				Up Position
					2				Down Position
					3				Right Position
					4				Left Position
									Vent Position
						C			12 Position
						D			3 Position
						E			6 Position
						F			9 Position

P143 Standard Parts

Item	Description		Part Number
1	Bonnet Cap	With gasket for Standard, acetal	610-065-000/ 662-230-000
2	Adjustment Screw, Acetal		648-528-000
3	Vent	Subassembly	822-036-000
4		Collar (2 required)	612-008-000
5	Diaphragms		
	Standard Diaphragm, plate & washer nitrile		804-265-001
6	Standard Bodies	3/4" x 3/4" Port Iron	664-357-000
		3/4" x 1" Port Iron	664-357-002
		1" x 1" Port Iron	664-357-001
		1" x 1-1/4" Port Iron	664-357-003
		1-1/4" x 1-1/4" Port Iron	664-357-004
7	Standard Orifice - Aluminum	1/8"	688-053-000
		3/16"	688-053-001
		1/4"	688-053-002
		5/16"	688-053-003
		3/8"	688-053-004
		1/2"	688-053-005
		5/8"	688-053-006
8	Main Seat, nitrile		650-168-000
9	Square Ring		662-226-000
10	Housing Nut & Retaining Ring,		803-073-000
11	Build Screws, plated steel (8 required)		648-529-000

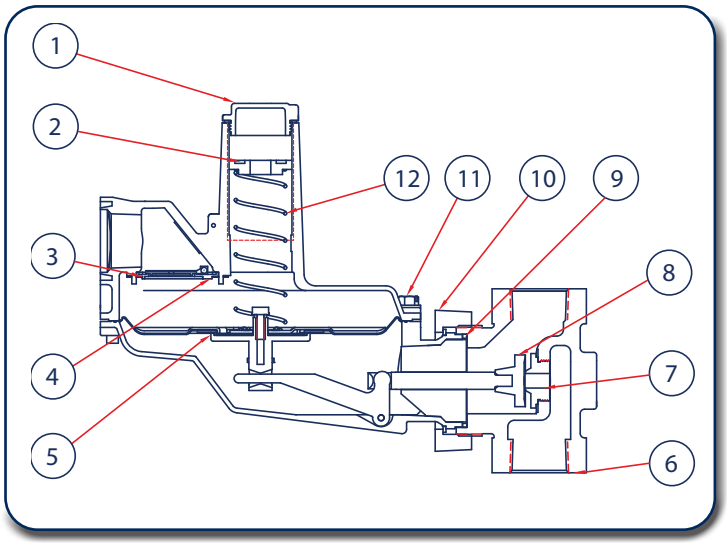

P143 Standard Model Flow Capacities

Capacity* in SCFH Natural Gas
(0.6 specific gravity – 14.65 PSIG –65˚F)

Body Size 3/4" x 3/4"							
Inlet	Orifice						
PSIG	1/8"	3/16"	1/4"	5/16"	3/8"	1/2"	5/8"
1/2	-	-	-	-	340	450	510
1	-	-	-	480	500	510	530
2	-	-	530	560	570	580	600
3	-	420	600	560	630	650	670
5	250	560	700	720	730	770	790
7.5	310	700	840	860	880	900	900
10	370	830	950	970	1000	1020	1020
20	530	1200	1220	1240	1250	1270	-
40	860	1570	1330	1340	1450	-	-
60	1200	1660	1520	-	-	-	-
80	1500	1710	-	-	-	-	-
125	1800	1900	-	-	-	-	-

Body Size 3/4" x 1 " • 1" X 1"							
Inlet	Orifice						
PSIG	1/8"	3/16"	1/4"	5/16"	3/8"	1/2"	5/8"
1/2	-	-	-	-	350	460	520
1	-	-	-	480	550	600	650
2	-	-	530	700	840	880	780
3	-	420	650	870	1000	920	810
5	250	580	890	1120	1160	950	970
7.5	310	700	1140	1340	1270	1140	1060
10	370	840	1360	1500	1330	1200	1180
20	530	1230	2000	1600	1480	1400	-
40	860	1700	2000	1640	1900	-	-
60	1200	1900	2000	-	-	-	-
80	1540	2000	-	-	-	-	-
125	2100	2100	-	-	-	-	-

Body Size 1" X 1-1/4" • 1-1/4" X 1-1/4"							
Inlet	Orifice						
PSIG	1/8"	3/16"	1/4"	5/16"	3/8"	1/2"	5/8"
1/2	-	-	-	-	350	460	520
1	-	-	-	480	550	680	760
2	-	-	530	700	840	1020	1030
3	-	420	650	870	1030	1200	1050
5	250	580	890	1180	1350	1490	1060
7.5	310	700	1140	1500	1610	1580	1060
10	370	840	1360	1700	1710	1800	1180
20	630	1230	1600	1800	1900	1900	-
40	860	1800	2200	1900	2000	-	-
60	1200	2100	2400	-	-	-	-
80	1550	2200	-	-	-	-	-
125	2250	2400	-	-	-	-	-

*Consult manufacturer for test conditions

P143 Standard Dimensions

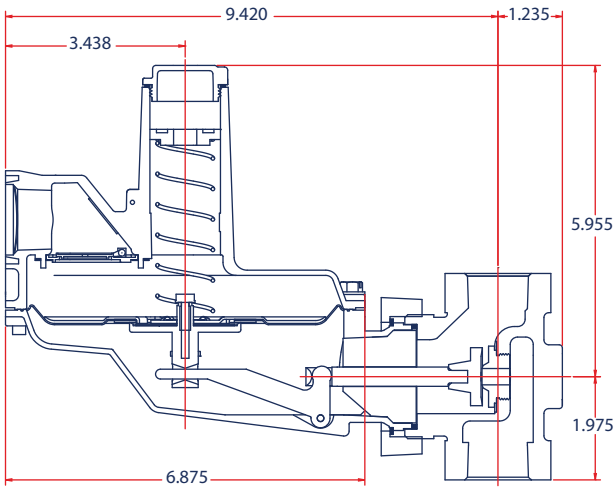

P143 Low Pressure Cut Off Parts

Item	Description		Part Number
1	Bonnet Cap	With gasket for LPCO, Aluminum	610-062-000/ 662-230-000
2	Adjustment Screw, Acetal		648-528-000
3	Vent	Collar (2 required)	612-008-000
4		Subassembly	822-036-000
5	Diaphragms		
	LPCO Diaphragm, plate & washer, nitrile		804-265-000
6	LPCO Bodies	3/4" x 3/4" Port Iron	664-351-000
		3/4" x 1" Port Iron	664-351-002
		1" x 1" Port Iron	664-351-001
		1" x 1-1/4" Port Iron	664-351-003
		1-1/4" x 1-1/4" Port Iron	664-351-004
7	LPCO Bottom Plug Assembly		819-008-000
8	LPCO Cutoff Seat Assembly		810-043-000
9	LPCO Orifice - Aluminum	1/4" - Double Sided	688-052-000
		5/16" - Double Sided	688-052-001
		3⁄8" - Double Sided	688-052-002
		7/16" - Double Sided	688-052-003
10	Main Seat, nitrile		650-168-000
11	Square Ring		662-226-000
12	Housing Nut & Retaining Ring		803-073-000
13	Build Screws, plated steel (8 required)		648-529-000

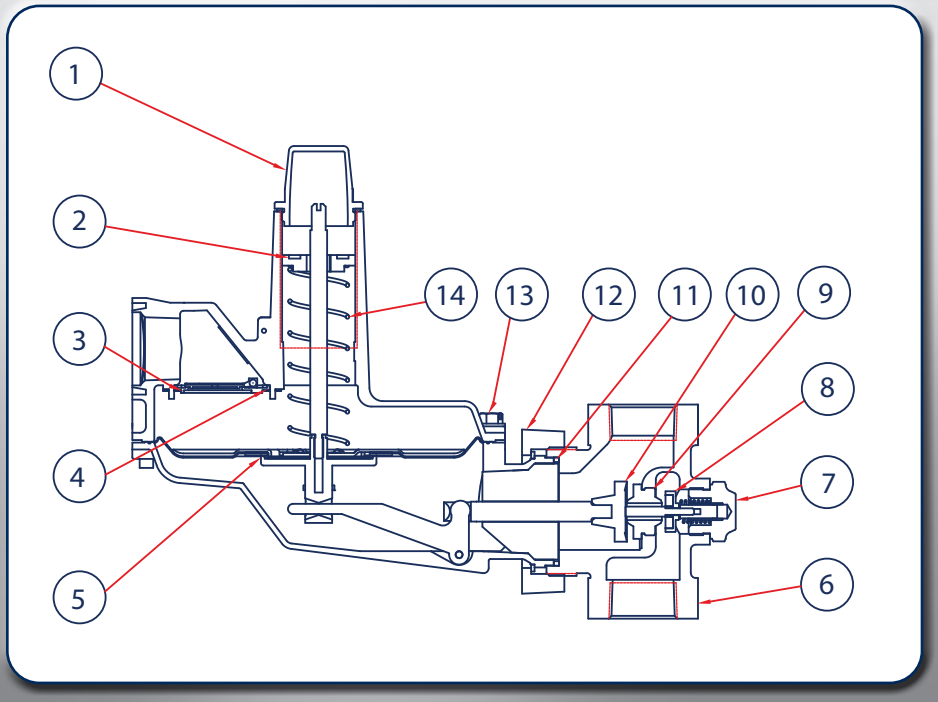

P143 LPCO Dimensions

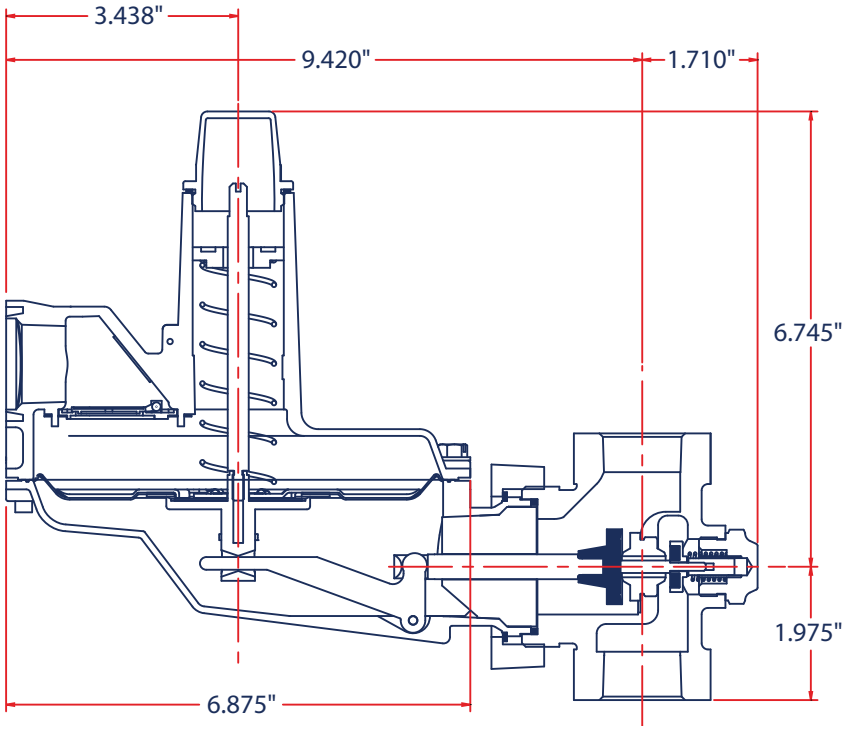

P143 LPCO Flow Capacities

Capacity* in SCFH Natural Gas
(0.6 specific gravity – 14.65 PSIG –65˚F)

Pipe Size (inches)	Inlet Pressure (PSIG)		Outlet Pressure Red Spring 4 – 7-1/2" WC Blue Spring 6-1/2" – 9-1/2" WC Orifice Size, Inches				Outlet Pressure Green Spring 7-1/2 – 15" " WC Orifice Size, Inches			
	PSIG	BAR	7/16	3/8	5/16	1/4	7/16	3/8	5/16	1/4
3/4" x 3/4"	1/2	.034	240	180	90		140	120	90	
	1	.068	400	300	200	100	250	200	160	90
	2	.137	580	420	300	140	370	320	240	140
	5	.344	800	750	600	230	580	530	460	220
	10	.684	1050	990	740	380	780	720	700	370
	15	1.03	1140	1050	950	46	920	860	800	480
	25	1.72		1100	1100	640		900	1000	660
	40	2.75			1300	870			1300	910
	60	4.14				1160				1160
3/4" x 1" 1" x 1"	1/2	.034	270	210	90		160	120	90	
	1	.068	430	310	210	100	260	230	160	90
	2	.137	650	420	300	140	410	350	270	140
	5	.344	1100	750	610	230	800	730	470	220
	10	.684	1300	1120	760	380	1220	1090	740	370
	15	1.03	1300	1300	960	460	1300	1300	930	480
	25	1.72		1300	1300	640		1300	1160	660
	40	2.75			1300	870			1300	910
	60	4.14				1160				1160
1" x 1-1/4" 1-1/4" x 1-1/4"	1/2	.034	270	210	90		160	120	90	
	1	.068	430	310	210	100	260	230	160	90
	2	.137	650	420	300	140	430	350	270	140
	5	.344	1100	750	510	230	870	730	470	220
	10	.684	1300	1120	760	380	1300	1090	740	370
	15	1.03	1300	1300	960	460	1300	1300	930	480
	25	1.72		1300	1300	640		1300	1160	660
	40	2.75			1300	870			1300	910
	60	4.14				1160				1160

*Consult manufacturer for test conditions

P143 RELIEF CURVES 2 PSIG SET POINT, LEVER DISCONNECT

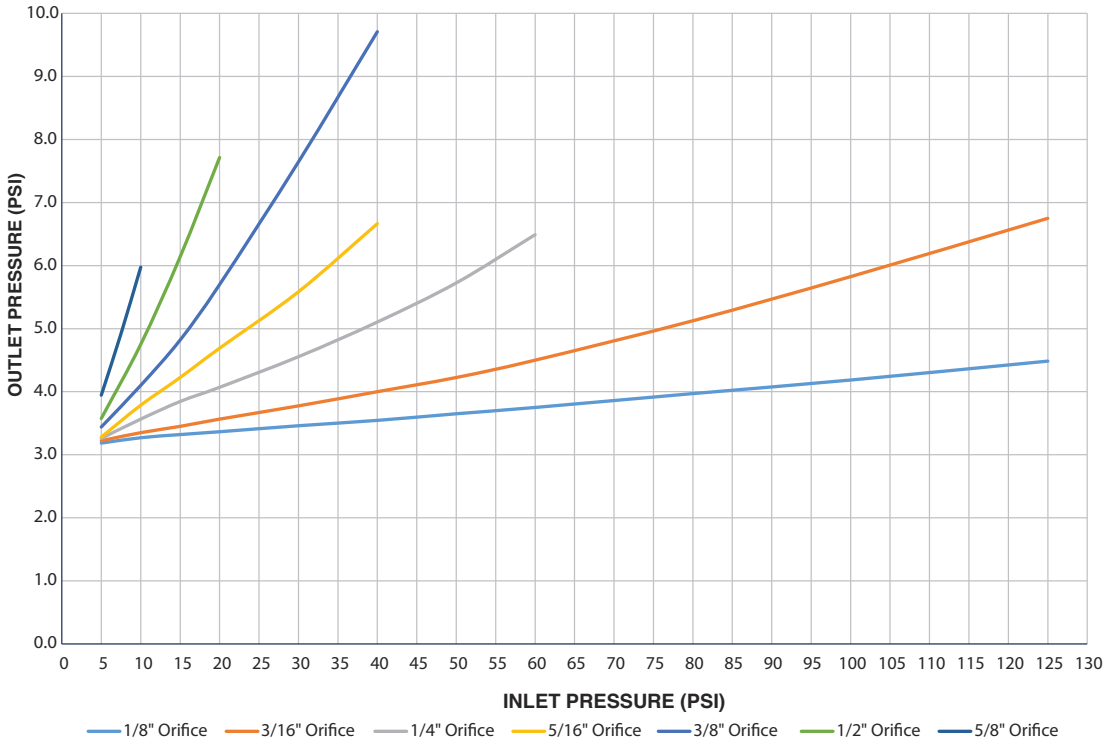

P143 RELIEF CURVES 7" W.C. SET POINT, LEVER DISCONNECT

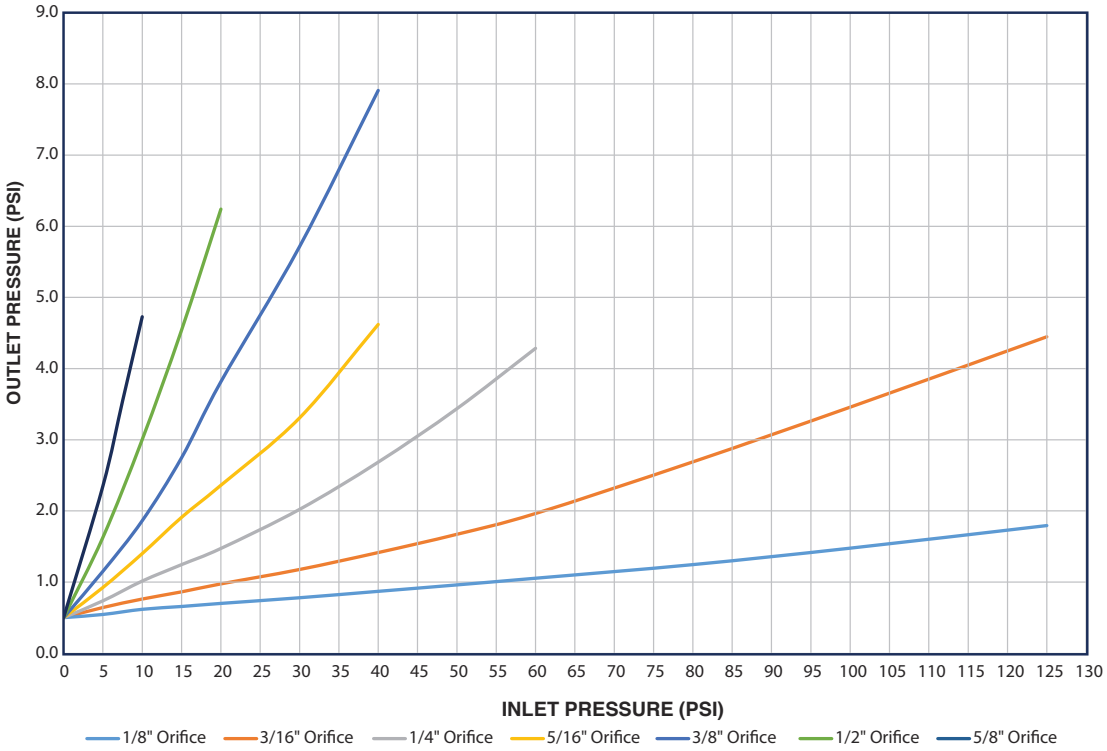

P140 Pressure Regulator

- Versatile
- Control Accuracy
- Compact Design

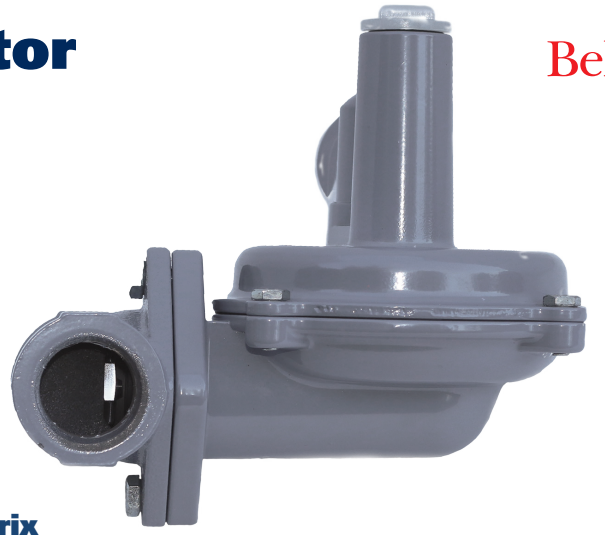

The Type P140 pressure regulator is ideal for natural gas, air, propane and general purpose gas pressure regulation. Uses include commercial, residential and light industrial for burners and unit heaters. Available with or without internal relief.

Applications

Applicable to a wide range of gaseous fluids, including air, natural gas and propane. Can be used as a LP regulator.

Materials of Construction

	P140
Body, Bonnet	Iron, Aluminum
Diaphragm	Nitrile
Diaphragm Assembly	Nitrile
Gaskets	Nitrile
Vent screen	Stainless Steel
Spring	Zinc-Plated Steel
Diaphragm Piston	Zinc-Plated Steel

Max Inlet Pressure (PSIG)

Orifice	Standard
1/8	125
3/16	125
1/4	60
5/16	35
3/8	20

Specifications

	P140
Inlet / Outlet	3/4" x 3/4", 3/4" x 1", 1" x 1", 1-1/4" x 1-1/4"
Maximum allowable inlet pressure	See Chart
Temperature Range	-20˚F to 150 ˚F

P140 Body Positions

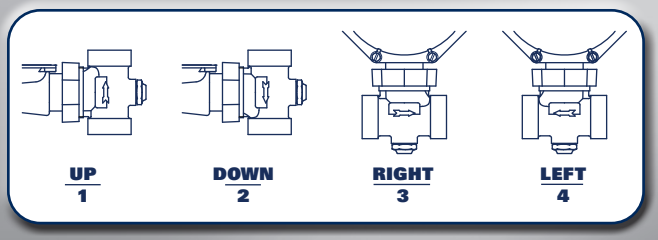

P140 Vent Positions

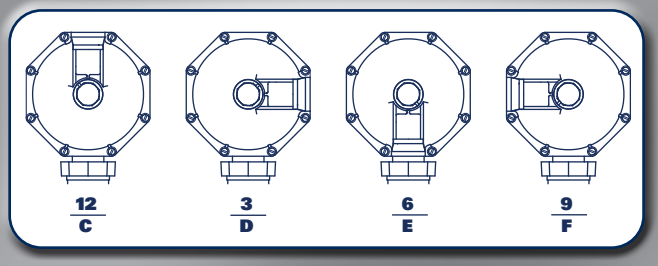

P140 Part Matrix

P140										
										Version
	R									Relieving
	0									Non-Relieving
										Port Size (Inlet X Outlet)
		06								3/4" NPT
		07								3/4" x 1" NPT
		08								1" NPT
		12								1-1/4" NPT
										Body Construction
			0							Straight
			1							90 Degree Angle
										Spring Range
										WC / mBAR
				007						5" - 7" / 12 - 17
				008						6" - 8" / 15 - 20
				014						8" - 14" / 20 - 35
				028						12" - 28" / 30 - 70
										PSIG / mBAR
				002						1 - 2 / 69 - 137
				004	Red Cap					2 - 4 / 137 - 276
				005						4 - 5 / 276 - 345
										Relief Spring
					0					Non Relieving
					5					5" WC Above Set
					6					6" WC Above Set
					7					7" WC Above Set
					9					9" WC Above Set (Standard)
										Orifice
						2				1/8"
						3				3/16"
						4				1/4"
						5				5/16"
						6				3/8"
						8				1/2"
										Port Orientation
							1			Up
							2			Down
							3			Right (Standard)
							4			Left
										Bonnet Orientation
								C		12 O'Clock
								D		3 O'Clock
								E		6 O'Clock (Standard)
								F		9 O'Clock

P140 Flow Capacities in SCFH of 0.6 Specific Natural Gas

Outlet Pressure, Spring Part No., Accuracy	NPT 3/4" Outlet Body Size								NPT 1" Outlet Body Size						NPT 1-1/4" Outlet Body Size					
	Inlet		Orifice						Orifice						Orifice					
	PSIG	BAR	1/8"	3/16"	1/4"	5/16"	3/8"	1/2"	1/8"	3/16"	1/4"	5/16"	3/8"	1/2"	1/8"	3/16"	1/4"	5/16"	3/8"	1/2"
7" WC Set Pressure 655-791-001 Brown 1" WC Droop	0.5	0.04	56	72	82	160	200	260	66	92	140	180	215	275	66	92	140	180	305	305
	1	0.07	61	87	180	250	280	365	82	145	210	280	305	410	82	145	310	325	330	450
	3	0.20	102	289	320	450	530	500	172	315	355	510	580	810	172	340	435	520	590	810
	5	0.30	208	375	450	602	715	806	218	405	510	730	830	1110	310	480	510	730	880	1110
	10	0.70	320	590	800	940	1090	1320	345	630	860	1110	1310	1555	350	710	860	1150	1520	1575
	15	1.00	380	750	1000	1320	1425		428	855	1210	1555	1650		525	980	1210	1565	1760	
	20	1.40	500	1046	1320	1510	1510		550	1110	1450	1855	2010		610	1250	1555	2070	2415	
	40	2.80	795	1600	1905				845	1750	2210				940	1755	2505			
	60	4.10	1000	2005	2110				1155	2310	2505				1270	2505	2505			
	100	6.90	1700	2110					1805	2505					1910	2505				
	PSIG	BAR	1/8"	3/16"	1/4"	5/16"	3/8"	1/2"	1/8"	3/16"	1/4"	5/16"	3/8"	1/2"	1/8"	3/16"	1/4"	5/16"	3/8"	1/2"
14" WC Set Pressure 655-791-003 Silver 2" WC Droop	2	0.14	75	200	270	390	400	555	70	220	305	435	460	830	140	210	330	395	460	830
	5	0.34	155	360	500	630	660	885	235	395	560	720	750	1230	235	395	560	720	750	1350
	10	0.69	350	550	750	965	1000	1230	375	610	825	1055	1140	1660	375	610	825	1120	1195	1720
	15	1.00	420	720	900	1255	1350		460	810	1080	1350	1475		375	810	1135	1375	1650	
	20	1.40	565	900	1250	1430	1575		610	1020	1330	1640	1810		630	1020	1395	1680	2025	
	30	2.10	745	1240	1550	1755			805	1350	1760	1955			815	1490	2075	2320		
	60	4.10	1230	1955	2210				1310	2255	2505				1330	2750	3420			
	80	5.50	1555	2300					1905	2580					1960	3435				
	100	6.90	1645	2500					2200	2710					1960	4020				
	125	8.60	2000	2700					2200	2905					2260	4320				
	PSIG	BAR	1/8"	3/16"	1/4"	5/16"	3/8"	1/2"	1/8"	3/16"	1/4"	5/16"	3/8"	1/2"	1/8"	3/16"	1/4"	5/16"	3/8"	1/2"
1 PSIG Set Pressure 655-791-003 Silver 1% Droop	2	0.14	95	220	270	290	380	410	85	235	305	340	430	460	140	295	330	340	430	520
	5	0.34	200	345	440	590	630	720	235	395	500	660	715	800	280	400	520	665	715	800
	10	0.69	330	525	700	870	1000	1000	370	580	780	1025	1135	1150	370	590	780	1035	1150	1280
	15	1.00	420	735	950	1200	1300		465	770	1055	1280	1420		465	790	1075	1280	1435	
	20	1.40	520	900	1200	1400	1620		580	990	1355	1560	1730		580	1020	1370	1590	1730	
	30	2.10	700	1150	1640	1750			800	1340	1860	2020			800	1365	1890	2040		
	60	4.10	1200	1920	2250				1280	2410	2860				1280	2580	2900			
	80	5.50	1550	2110					1705	2900					1720	3400				
	100	6.90	1660	2150					1905	3155					1935	3420				
	125	8.60	1770	2160					2105	3310					2210	3620				
	PSIG	BAR	1/8"	3/16"	1/4"	5/16"	3/8"	1/2"	1/8"	3/16"	1/4"	5/16"	3/8"	1/2"	1/8"	3/16"	1/4"	5/16"	3/8"	1/2"
2 PSIG Set Pressure 655-791-004 Yellow/Black 1% Droop	5	0.34	125	205	260	360	380	300	130	225	290	410	420	485	130	180	250	280	300	395
	10	0.69	210	340	440	690	690	850	235	375	490	735	760	850	260	420	585	755	775	870
	15	1.00	270	450	600	900	900		310	505	655	1010	1010		370	530	67	1060	1120	
	20	1.38	340	550	760	1080	1080		375	610	850	1210	1210		430	625	860	1290	1320	
	30	2.10	450	850	1100	1450			510	905	1240	1620			535	930	1250	1720		
	60	4.10	880	1500	2040				960	1620	2250				960	1660	2300			
	80	5.52	1100	1910					1210	2010					1290	2110				
	100	6.90	1430	1910					1600	2410					1720	2490				
	125	8.60	1760	2115					2110	3320					2150	3420				
	PSIG	BAR	1/8"	3/16"	1/4"	5/16"	3/8"	1/2"	1/8"	3/16"	1/4"	5/16"	3/8"	1/2"	1/8"	3/16"	1/4"	5/16"	3/8"	1/2"
5 PSIG Set Pressure 655-791-006 White 1% Droop	10	0.69	125	155	200	275	290	580	120	155	225	245	305	335	180	250	310	375	450	660
	15	1.00	125	155	200	275	290		135	170	230	290	335		160	205	270	310	380	
	20	1.38	140	175	240	275	350		165	200	270	315	390		165	235	330	370	450	
	30	2.10	170	225	290	360			200	270	330	415			225	330	420	435		
	60	4.10	180	350	500				300	400	555				355	455	600			
	80	5.52	300	420					370	490					490	640				
	100	6.90	380	520					430	590					500	700				
	125	8.60	450	620					515	710					650	870				

P140 Relief Curves

1" outlet, 1" vent port, 7" WC regulator set point

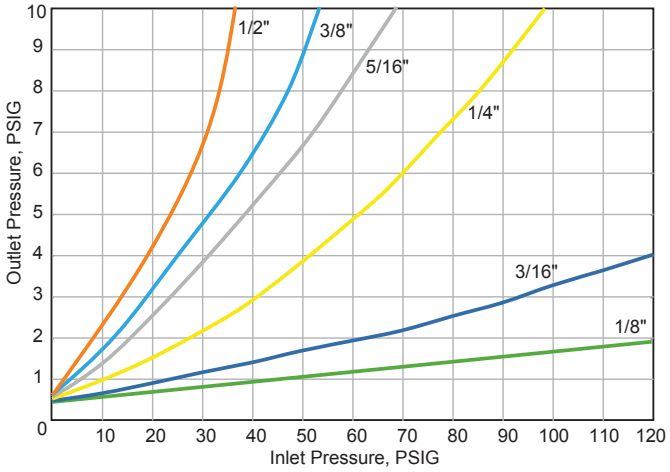

1" outlet, 1" vent port, 14" WC regulator set point

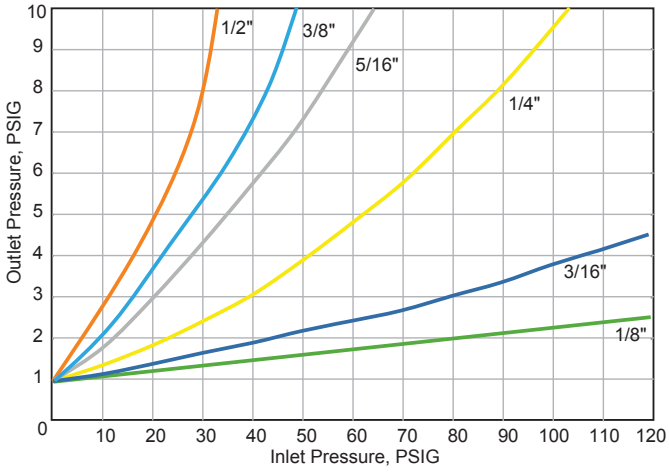

1" outlet, 1" vent port, 1 PSIG regulator set point

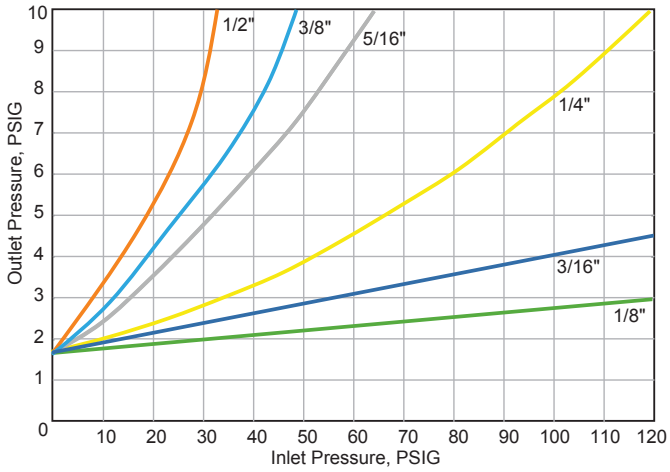

1" outlet, 1" vent port, 2 PSIG regulator set point

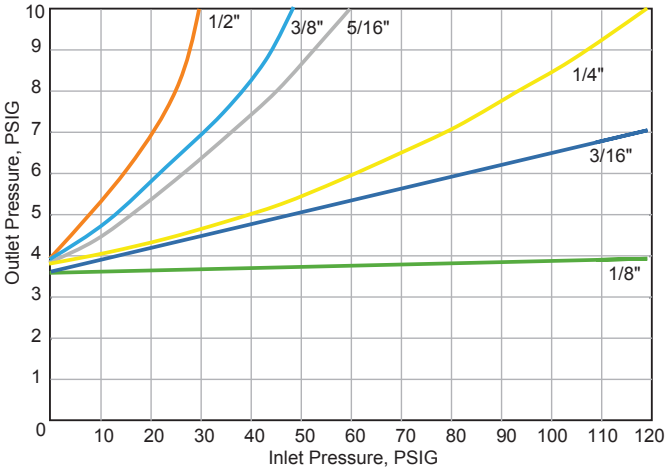

1" outlet, 1" vent port, 5 PSIG regulator set point

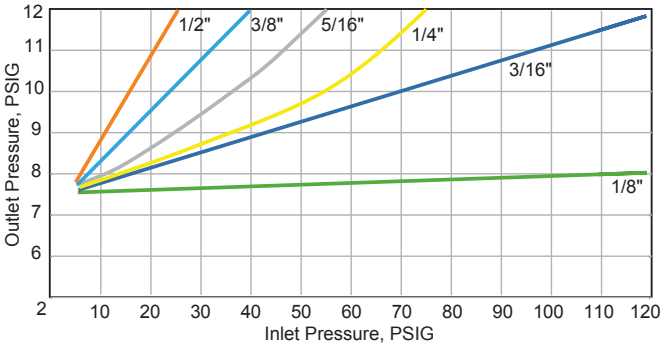

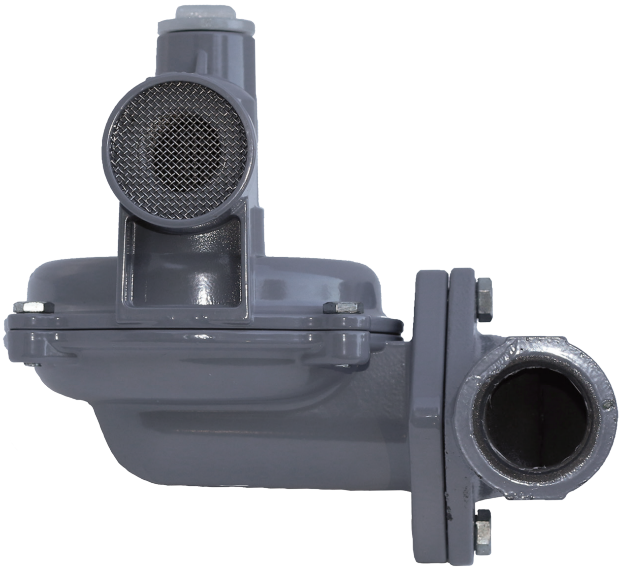

P140 Standard Parts

Item	Description	Qty.	Part Number
1	Bonnet Cap w/ gasket	1	812-035-000
	Red Bonnet Cap w/ gasket	1	812-036-000
	Bonnet (5"-7" up to 1-2 psi)	1	604-291-000
	Bonnet (2-4 psi up to 4-5 psi)		604-292-000
3	Adjustment Screw - 5" to 2 PSIG	1	648-581-000
	Adjustment Screw - 2 to 5 PSIG		648-581-001
3	**Range Springs**	1	
	5"-7" WC, Green		655-791-000
	6"-8" WC, Brown		655-791-001
	8"-14" WC, Blue		655-791-002
	12"-28" WC, Silver		655-791-003
	1-2 PSIG, Yellow/Black		655-791-004
	2-4 PSIG, Yellow		655-791-005
	4-5 PSIG, White		655-791-006
4	**Aluminum Orifices**	1	
	Orifice - 1⁄8"		688-076-000
	Orifice - 3⁄16"		688-076-001
	Orifice - 1⁄4"		688-076-002
	Orifice - 5/16"		688-076-003
	Orifice - 3⁄8"		688-076-004
	Orifice - 1⁄2"		688-076-005
5	**Cast Iron Bodies**	1	
	Iron Body - 3⁄4" NPT straight		664-449-000
	Iron Body - 3⁄4" NPT angle		664-450-000
	Iron Body - 3⁄4" x 1" NPT straight		664-451-000
	Iron Body - 3⁄4" x 1" NPT angle		664-452-000
	Iron Body - 1" NPT straight		664-453-000
	Iron Body - 1" NPT angle		664-454-000
	Iron Body - 1 1/4" NPT straight		664-455-000
	Iron Body - 1 1/4" NPT angle		664-456-000
6	**Relief Springs**	1	
	5" above set, Orange		655-792-000
	6" above set, Red		655-792-001
	7" above set, Purple		655-792-002
	9" above set, Black		655-792-003
7	Seat assembly - Nitrile	1	650-204-000
8	Steel Build Bolt (Not Shown)	4	648-587-000
9	Steel Body Bolt (Not Shown)	2	648-587-001
10	Body Gasket	1	624-112-000
11	Non-relieving Diaphragm Assembly		804-296-000
	Relieving Diaphragm Assembly - 5"	1	804-297-000
	Relieving Diaphragm Assembly - 6"	1	804-297-001
	Relieving Diaphragm Assembly - 7"	1	804-297-002
	Relieving Diaphragm Assembly - 9"	1	804-297-003

P140 Dimensions

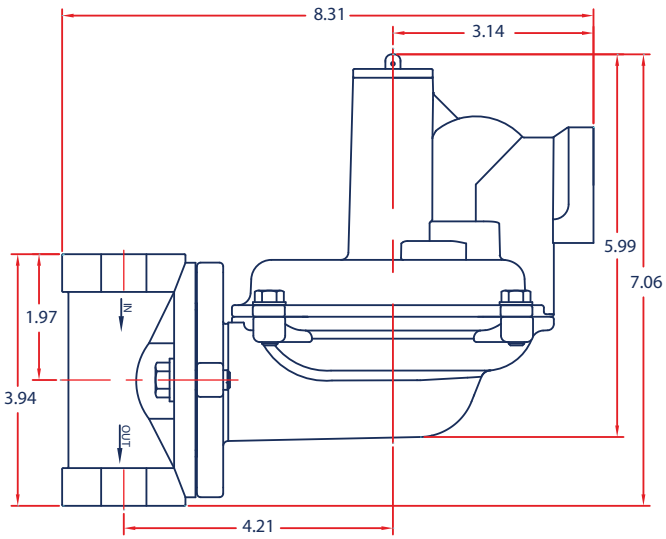

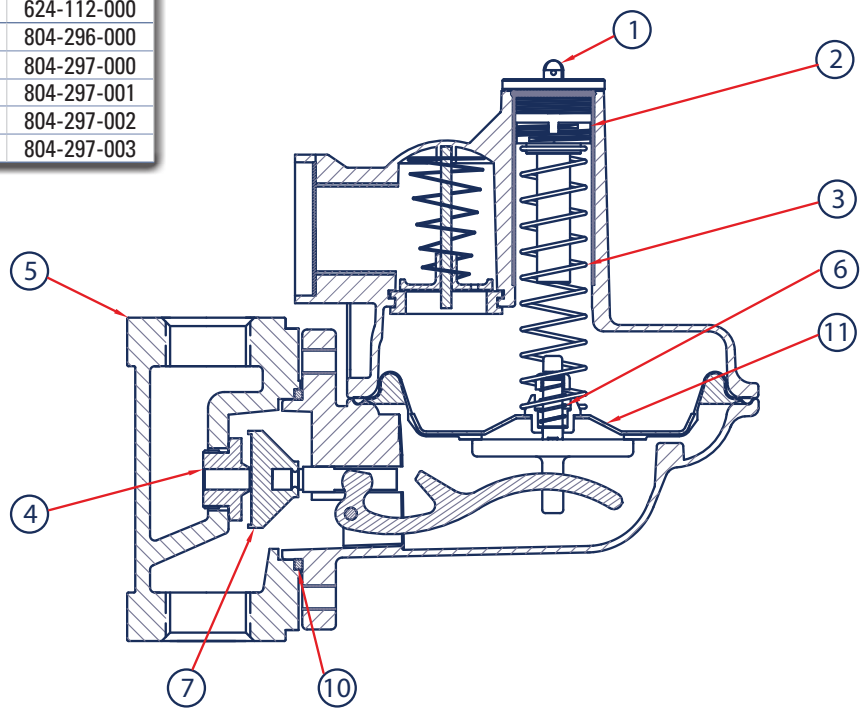

Notice:
When changing a lower pressure P140 to a higher pressure unit, the bonnet and adjustment screw must be change as well.

5"-7" up to 1-2 psi spring ranges use;
Bonnet 604-291-000 Adjust 648-581-000

2-4 psi up to 4-5 psi spring ranges use;
Bonnet 604-292-000 Adjust 648-581-001

P133 Pressure Regulator

- Suitable for Monitoring
- Balanced Supply Valve
- Wide Pressure Range Offering

The P133 is a direct operated pressure reducing regulator with external pressure registration used in commercial and industrial applications such as furnaces and burners where accuracy and sensitivity is critical. The regulator utilizes a balanced diaphragm design that provides for the sensitivity and accuracy. This minimizes the effects of supply pressure variation on output pressure. The P133 is available in low pressure or high pressure models and a broad range of outlet spring ranges. The P133 is also suitable in pressure monitoring applications.

Applications

- Industrial and Commercial Gas Regulation
- Compressors
- Gas Engines
- Natural Gas and Propane Applications

Materials of Construction

Adjusting Screw	Aluminum, Brass or Steel
Body	Ductile Cast Iron or WCB Steel
Bonnet	Aluminum or Cast Iron
Cage	Aluminum
Diaphragm	Nitrile or Fluorocarbon
Lower Casing	Aluminum or Steel
Molded Seat Assembly	Nitrile or Fluorocarbon
Orifice	Aluminum
Upper Casing	Steel

P133 Wide Open Flow Coefficients

Table 1

Capacity	Wide Open C_g for Relief Valve Sizing	Representative C_1
25% (1)	490	28.2
40% (1)	760	29.1
60% (1)	1150	31.8
100%	1800	35.0

1. Using optional restriction collar.
2. $C_1 = C_g / C_v$

Specifications

	133L	133H	133K
Maximum Operating Inlet	60 PSIG	60 PSIG	150 PSIG
Maximum Emergency Inlet	125 PSIG	125 PSIG	150 PSIG
Maximum Operating Outlet	2 PSIG	10 PSIG	Set + 40 PSIG
Maximum Emergency Outlet	15 PSIG	15 PSIG	150 PSIG
Pressure Ranges	See Table 2		
Port Sizes	2 NPT		
Restrictor Collars	25%		
	40%		
	60%		
End Connections	2" NPT (Standard)		
	125 FF Flange (Iron Only)		
	150 RF Flange (Steel Only)		
Temperature Range	-40˚F to 200˚F		
	-40˚C to 93˚C		
Approx. Weight	35 lbs. (15.9 kg)		60 lbs. (27.2 kg)

P133 Series Range Springs

Table 2

Model	Spring Ranges		Spring Color	Part Number
	WC or PSIG	mBAR		
P133 L & P133 H	2" - 4" WC	4.98-19.92	Brown	655-697-002
	3.5" - 6" WC	8.71-14.94	Pink	655-730-002
	5" - 9" WC	12.45-22.41	Tan	655-730-003
	6" - 14" WC	14.94-34.87	Purple	655-697-011
	8.5" - 18" WC	21.17-44.83	White	655-697-005
	14" - 28" WC	34.87-69.74	Green	655-697-006
	0.75 - 2 PSIG	51.71-137-89	Dark Blue	655-697-007
	PSIG	BAR		
P133 H	1.5 - 3.25 PSIG	0.103 - 0.224	Orange	655-697-008
	2 - 5 PSIG	0.138 - 0.345	Yellow	655-730-000
	5 - 10 PSIG	0.345 - 0.689	Grey	655-730-001
P133K	6 - 20 PSIG	0.413 - 1.378	Silver	655-771-002
	16 - 30 PSIG	1.103 - 2.068	Red	655-771-003
	26 - 40 PSIG	1.792 - 2.757	Blue	655-771-004
	36 - 50 PSIG	2.482 - 3.447	Green	655-771-005
	45 - 60 PSIG	3.102 - 4.136	White	655-771-006
	2 - 5 PSIG	0.137 - 0.344	Yellow	655-771-000
	4.5 - 10 PSIG	0.310 - 0.689	Orange	655-771-001

P133 Regulator Rebuild Kits

	Kit Includes	Part Number
P133 L Version	Nitrile - Kits Includes: Diaphragm (2), valve disk assembly, orifice, orifice O-ring, upper stem O-ring (2), body O-ring, sealing washers (2), bearing, guide washer and cap gasket and thrust washer	971-P13-302
	Fluorocarbon - Kits Includes: Diaphragm (2), valve disk assembly, orifice, orifice O-ring, upper stem O-ring (2), body O-ring, sealing washers (2), bearing, guide washer, cap gasket and thrust washer	971-P13-303
P133 H Version	**Nitrile** -- Kits Includes: Diaphragm (2), valve disk assembly, orifice, orifice O-ring, upper stem, O-ring (2), body O-ring, sealing washers (2), bearing, guide washer and cap gasket and thrust washer	971-P13-300
	Fluorocarbon - Kits Includes: Diaphragm (2), valve disk assembly, orifice, orifice O-ring, upper stem O-ring (2), body O-ring, sealing washers (2), bearing, guide washer, cap gasket and thrust washer	971-P13-301
P133 K Version	**Nitrile** - Kits Includes: Diaphragm (2), valve disk assembly, orifice, orifice O-ring, upper stem O-ring (2), body O-ring, sealing washers (2), bearing, guide washer and cap gasket and thrust washer, adaptor O-ring, diaphragm O-ring, mounting bracket gasket	971-P13-304
	Fluorocarbon - Kits Includes: Diaphragm (2), valve disk assembly, orifice, orifice O-ring, upper stem O-ring (2), body O-ring, sealing washers (2), bearing, guide washer and cap gasket and thrust washer, adaptor O-ring, diaphragm O-ring, mounting bracket gasket	971-P13-305

P133 Part Matrix

P133										
									Version	
	L								Low Pressure	
	H								High Pressure	
	K								Heavy Pressure	
									Main Spring	
									WC or PSIG / mBAR	
		004							2" - 4" WC / 4.98 - 19.92	L& H Versions only
		006							3.5" - 6" WC / 8.71 - 14.94	
		009							5" - 9" WC / 12.45 - 22.41	
		014							6" - 14" WC / 14.94 - 34.87	
		018							8.5" - 18" WC / 21.17 - 44.83	
		028							14" - 28" WC / 34.87 - 69.74	
		002							0.75 - 2 PSIG / 51.71 - 137.89	
									PSIG / BAR	
		003							1.5 - 3.25 PSIG / 0.103 - 0.224	H Version Only
		005							2 - 5 PSIG / 0.137 - 0.344	
		010							5 - 10 PSIG / 0.345 - 0.689	
		020							6 - 20 PSIG / 0.413 - 1.378	K Version Only
		030							16 - 30 PSIG / 1.103 - 2.068	
		040							26 - 40 PSIG / 1.792 - 2.757	
		050							36 - 50 PSIG / 2.482 - 3.447	
		060							45 - 60 PSIG / 3.102 - 4.136	
		K05							2 - 5 PSIG / 0.137 - 0.344	
		K10							4.5 - 10 PSIG / 0.310 - 0.689	
			0						Special Construction	
			A						None	
			E						150 RF (2" Steel Only)	
									125 FF (2" Iron Only)	
				00					Restriction	
				25					None	
				40					25%	
				60					40%	
					1				Port Orientation	
					2				Up (Standard)	
					3				Down	
					4				Right	
									Left	
						C			Bonnet Orientation	
						D			12 O'Clock	
						E			3 O'Clock	
						F			6 O'Clock (Standard)	
									9 O'Clock	
							0		Trim Material	
							2		Nitrile	
									Fluorocarbon	
								0	Body Material	
								2	Iron	
									Steel	

P133 Port Orientation

PORT ORIENTATION (ORDERING MATRIX DIGIT "12")

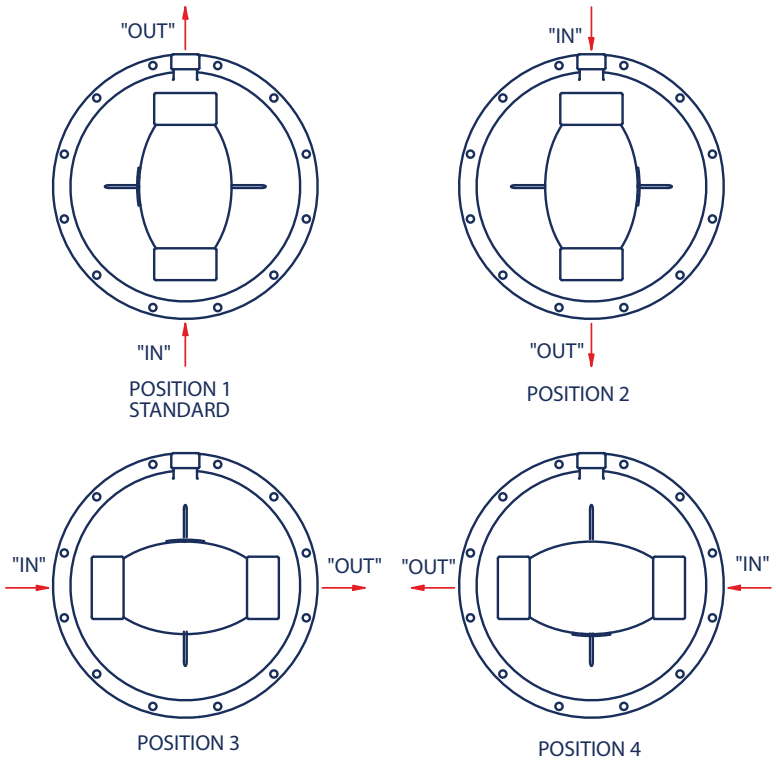

Port orientation is based on the body's 'Out' port location in relation to the control port of the housing.

P133 Bonnet Vent Orientation

BONNET VENT ORIENTATION (ORDERING MATRIX DIGIT "13")

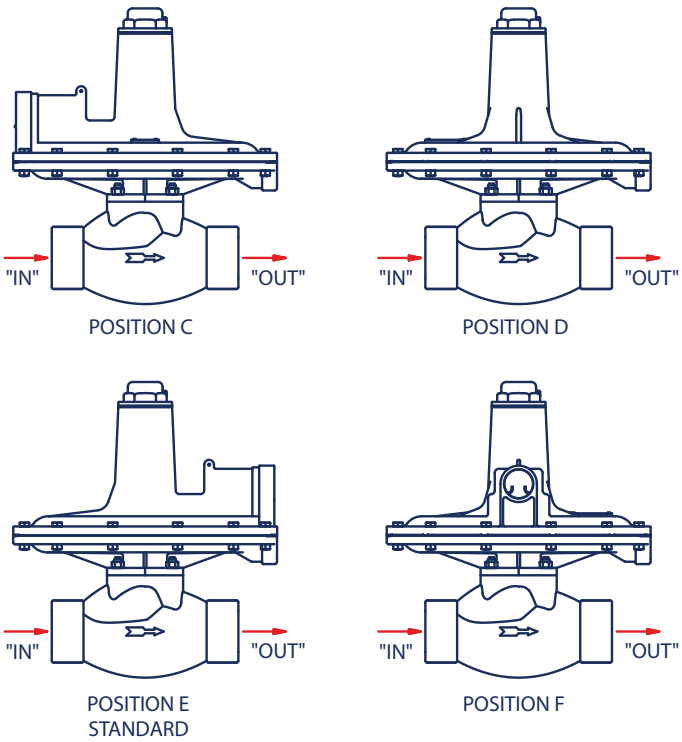

P133 Dimensions

	Body Type	A			B	C	D		
		2" NPT	125 FF	150 RF			2" NPT	125 FF	150 RF
H & L	Standard	10.0	—	—	7.91	13.36	4.36	—	—
	Flanged	—	10.0	10.0	7.91	13.36	—	4.36	4.36

P133 Standard

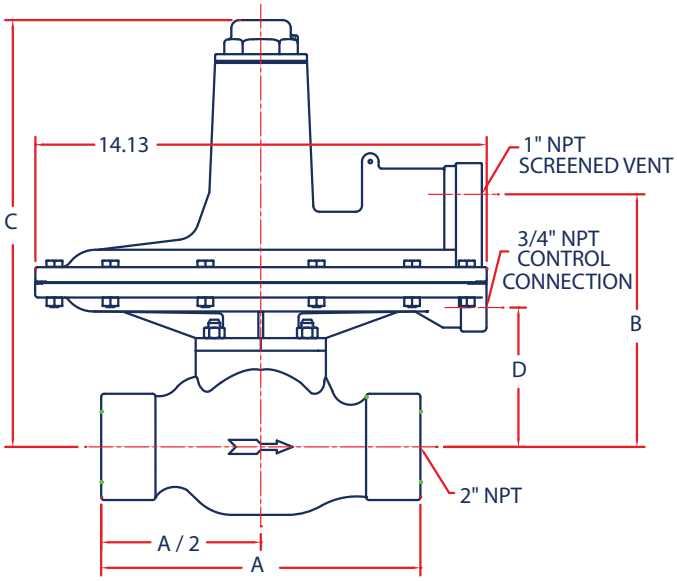

P133 Flanged

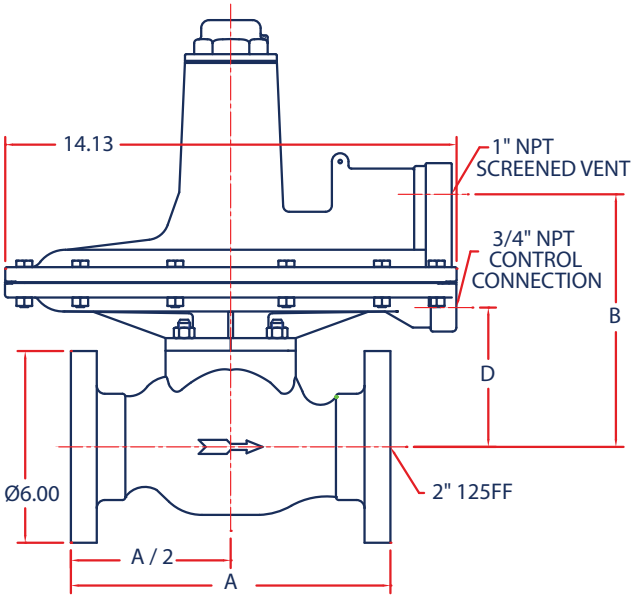

P133K

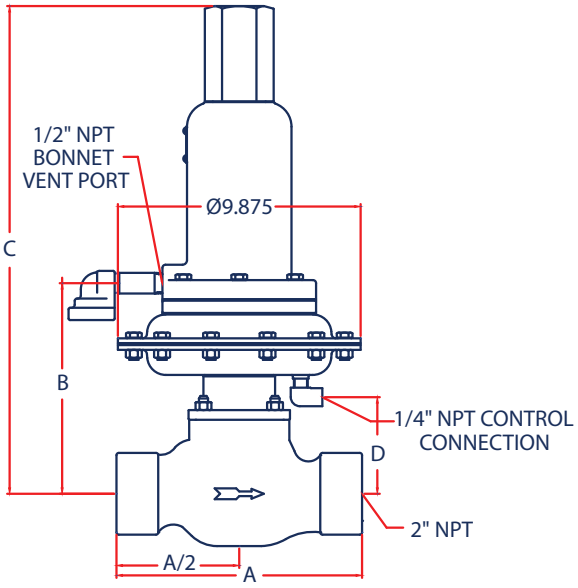

P133L Unrestricted Flow Capacities in Thousands of SCFH

(Nm³/h) of 0.6 Specific Gravity Natural Gas at 14.7 PSIA and 60˚F

Inlet Pressure		Outlet Pressure Setting[1] and Outlet Pressure Range										
		4 in. WC (10 mBAR) 2 to 4 in. WC (5 to 10 mBAR)	6 in. WC (15 mBAR) 3.5 to 6 in. WC (8.7 to 15 mBAR)	7 in. WC (17 mBAR) 5 to 9 in. WC (12 to 22 mBAR)	14 in. WC (35 mBAR) 8.5 to 18 in. WC (21.2 to 44.8 mBAR)		14 in. WC (35 mBAR) 14 to 28 in. WC (35 to 70 mBAR)		1 PSIG (0.07 BAR) 14 to 28 in. WC (35 to 70 mBAR)		2 PSIG (0.14 BAR) 0.75 to 2 PSIG (0.05 to 0.14 BAR)	
PSIG	BAR	1 in. WC (2.5 mBAR) Droop	1 in. WC (2.5 mBAR) Droop	1 in. WC (2.5 mBAR) Droop	1 in. WC (2.5 mBAR) Droop	2 in. WC (5 mBAR) Droop	1 in. WC (2.5 mBAR) Droop	2 in. WC (5 mBAR) Droop	10% Droop	20% Droop	10% Droop	20% Droop
1	0.07	14 (0.38)	13 (0.35)	12 (0.32)	5 (0.13)	8.4 (0.22)						
2	0.14	20.8 (0.56)	20 (0.54)	17 (0.46)	8.2 (0.22)	15.2 (0.41)			11.5 (0.31)	16 (0.43)		
3	0.21	26 (0.70)	24.5 (0.66)	21 (0.56)	12 (0.32)	19.5 (0.52)			15.5 (0.42)	21.5 (0.58)	12.5 (0.34)	18.5 (0.50)
5	0.34	35 (0.94)	33 (0.88)	32 (0.86)	16 (0.43)	28 (0.75)	14 (0.38)	23 (0.62)	24 (0.64)	31.5 (0.84)	20.5 (0.55)	28 (0.75)
10	0.69	52 (1.39)	52 (1.39)	48 (1.29)	34 (0.91)	45 (1.21)	26 (0.70)	38 (1.02)	37.5 (1.00)	44 (1.18)	38 (1.02)	46 (1.29)
20	1.38	78 (2.09)	77 (2.06)	79 (2.12)	69 (1.85)	76 (2.04)	60 (1.61)	69 (1.85)	70 (1.88)	77 (2.06)	62 (1.66)	76 (2.04)
30	2.07	101 (2.7)	100 (2.68)	100 (2.68)	91 (2.44)	97 (2.60)	87 (2.33)	93 (2.49)	90 (2.41)	101 (2.71)	87 (2.33)	101 (2.71)
40	2.76	124 (3.32)	122 (3.27)	124 (3.32)	109 (2.92)	116 (3.11)	107 (2.87)	115 (3.08)	110 (2.95)	122 (3.27)	105 (2.81)	121 (3.24)
50	3.45	146 (3.91)	144 (3.86)	145 (3.89)	130 (3.48)	136 (3.64)	132 (3.54)	137 (3.67)	127 (3.40)	145 (3.89)	124 (3.32)	145 (3.89)
60	4.14	170 (4.56)	168 (4.50)	166 (4.45)	155 (4.15)	161 (4.32)	152 (4.07)	158 (4.23)	149 (3.99)	167 (4.48)	145 (3.89)	170 (4.56)

P133H Unrestricted Flow Capacities in Thousands of SCFH

(Nm³/h) of 0.6 Specific Gravity Natural Gas at 14.7 Psia and 60˚F

Inlet Pressure		Outlet Pressure Setting[1] and Outlet Pressure Range									
		3 PSIG (0.21 BAR) 1.5 to 3 PSIG (0.10 to 0.21 BAR)		2 PSIG (0.14 BAR) 2 to 5 PSIG (0.14 to 0.34 BAR)		5 PSIG (0.34 BAR) 2 to 5 PSIG (0.14 to 0.34 BAR)		5 PSIG (0.34 BAR) 5 to 10 PSIG (0.34 to 0.69 BAR)		10 PSIG (0.69 BAR) 5 to 10 PSIG (0.34 to 0.69 BAR)	
PSIG	BAR	10% Droop	20% Droop	10% Droop	20% Droop	10% Droop	20% Droop	10% Droop	20% Droop	10% Droop	20% Droop
3	0.21			6.5 (0.17)	11.5 (0.31)						
5	0.34	14 (0.38)	22 (0.59)	11 (0.30)	18 (0.48)						
7	0.48	21.5 (0.58)	31 (0.83)	13 (0.35)	22 (0.59)	15.5 (0.42)	24 (0.64)	9 (0.24)	15 (0.40)		
10	0.69	28 (0.75)	42 (1.13)	15 (0.40)	27 (0.72)	24 (0.64)	35 (0.94)	14 (0.38)	22 (0.59)		
15	1.03	40 (1.07)	57 (1.53)	25.5 (0.68)	39 (1.04)	35 (0.94)	51 (1.37)	19 (0.51)	31.5 (0.84)	21 (0.56)	35 (0.94)
20	1.38	52 (1.39)	72 (1.93)	35 (0.94)	52 (1.39)	46 (1.23)	67 (1.80)	24 (0.64)	41 (1.10)	31 (0.83)	51 (1.37)
30	2.07	76 (2.04)	96 (2.57)	49 (1.31)	73 (1.96)	68 (1.82)	95 (2.55)	35 (0.94)	58 (1.55)	44 (1.18)	74 (1.98)
40	2.76	98 (2.63)	119 (3.19)	66 (1.77)	97 (2.60)	88 (2.36)	117 (3.14)	44 (1.18)	73 (1.96)	56 (1.50)	97 (2.60)
50	3.44	118 (3.16)	141 (3.78)	84 (2.25)	112 (3.00)	103 (2.76)	138 (3.70)	57 (1.53)	89 (2.38)	74 (1.98)	117 (3.14)
60	4.14	136 (3.64)	165 (4.42)	104 (2.79)	132 (3.54)	122 (3.27)	156 (4.18)	65 (1.74)	106 (2.84)	91 (2.44)	136 (3.64)

1. Outlet pressure setting was made at approximately 10% of the maximum capacity for the listed conditions.

P133H Flow Capacities in Thousands of SCFH

(Nm³/h) of 0.6 Specific Gravity Natural Gas at 14.7 Psia and 60˚F

Inlet Pressure		Outlet Pressure Setting[1] and Outlet Pressure Range											
		25% Capacity				40% Capacity				60% Capacity			
		5 PSIG (0.34 BAR) 2 to 5 PSIG (0.14 to 0.34 BAR)		10 PSIG (0.69 BAR) 5 to 10 PSIG (0.34 to 0.69 BAR)		5 PSIG (0.34 BAR) 2 to 5 PSIG (0.14 to 0.34 BAR)		10 PSIG (0.69 BAR) 5 to 10 PSIG (0.34 to 0.69 BAR)		5 PSIG (0.34 BAR) 2 to 5 PSIG (0.14 to 0.34 BAR)		10 PSIG (0.69 BAR) 5 to 10 PSIG (0.34 to 0.69 BAR)	
PSIG	BAR	10% Droop	20% Droop	10% Droop	20% Droop	10% Droop	20% Droop	10% Droop	20% Droop	10% Droop	20% Droop	10% Droop	20% Droop
7	0.48	8.0 (0.21)	9.0 (0.24)			11.0 (0.0)	15.0()0.40			13.0 (.035)	17.0 (0.46)		
10	0.69	12.3 (0.33)	13.0 (0.35)			16.5 (0.44)	20.0 (0.54)			20.0 (0.54)	25.0 (0.67)		
15	1.03			13.0 (0.35)	15.5 (0.42)			16.5 (0.44)	23.5 (0.63)			20.0 (0.54)	29.5 (0.79)
20	1.38	20.8 (0.56)	21.2 (0.57)	17.5 (0.47)	20.0 (0.54)	31.5 (0.84)	33.5 (0.90)	23.5 (0.63)	30.5 (0.82)	36.0 (0.96)	46.5 (1.25)	29.0 (0.78)	39.5 (1.06)
40	2.76	33.5 (0.90)	33.5 (0.90)	33.0 (0.88)	33.5 (0.90)	52.0 (1.39)	53.2 (1.43)	46.0 (1.23)	53.2 (1.43)	70.0 (1.88)	77.5 (2.08)	57.0 (1.53)	74.5 (2.00)
60	4.14	45.5 (1.22)	45.5 (1.22)	45.5 (1.22)	45.5 (1.22)	72.7 (1.95)	72.7 (1.95)	67.0 (1.80)	72.7 (1.95)	105.0 (2.81)	107.0 (2.87)	87.0 (2.33)	107 (2.87)

1. Outlet pressure setting was made at approximately 10% of the maximum capacity for the listed conditions.

P133K Regulator 100% Capacities in Thousands of SCFH of (0.6 Specific Gravity Gas)

Outlet Pressure Range, Control Spring Number and Color	Outlet Pressure Setting [1]		Inlet Pressure		2" (DN 50) Body Size 1.91 Inches (48.5 mm) Orifice Size Droop from Setpoint		
					10%	20%	30%
	PSIG	BAR	PSIG	BAR	SCFH (Nm3/h)	SCFH (Nm3/h)	SCFH (Nm3/h)
2 to 5 PSIG 0.14 to 0.34 BAR 655-771-000 Yellow	2	0.14	10	0.7	10.4 (0.28)	18.9 (0.51)	27.5 (0.74)
			20	1.4	16.4 (0.44)	29.8 (0.80)	43.3 (1.16)
			40	2.8	27.0 (0.72)	49.1 (1.32)	71.2 (1.91)
			60	4.1	37.1 (0.99)	67.5 (1.81)	97.9 (2.62)
			80	5.5	47.2 (1.26)	85.7 (2.30)	124.3 (3.33)
			100	6.9	57.1 (1.53)	103.9 (2.78)	150.6 (4.04)
			125	8.6	69.5 (1.86)	126.5 (3.39)	183.4 (4.92)
			150	10.3	82.0 (2.20)	149.1 (4.00)	216.3 (5.80)
	5	0.34	10	0.7	20.2 (0.54)	41.5 (1.11)	42.8 (1.15)
			20	1.4	35.1 (0.94)	71.7 (1.92)	72.3 (1.94)
			40	2.8	59.6 (1.60)	121.3 (3.25)	121.5 (3.26)
			60	4.1	82.4 (2.21)	167.9 (4.50)	168.0 (4.50)
			80	5.5	104.9 (2.81)	213.6 (5.72)	213.6 (5.72)
			100	6.9	127.2 (3.41)	258.9 (6.94)	258.9 (6.94)
			125	8.6	155.0 (4.15)	315.4 (8.45)	315.4 (8.45)
			150	10.3	182.7 (4.90)	371.8 (9.96)	371.8 (9.96)
4.5 to 10 PSIG 0.31 to 0.69 BAR 655-771-001 Orange	5	0.34	10	0.7	11.4 (0.31)	21.4 (0.57)	32.0 (0.86)
			20	1.4	19.6 (0.52)	36.4 (0.98)	53.4 (1.43)
			40	2.8	33.0 (0.88)	61.3 (1.64)	89.6 (2.40)
			60	4.1	45.7 (1.22)	84.7 (2.27)	123.7 (3.32)
			80	5.5	58.1 (1.56)	107.7 (2.89)	157.3 (4.22)
			100	6.9	70.5 (1.89)	130.6 (3.50)	190.7 (5.11)
			125	8.6	85.8 (2.30)	159.0 (4.26)	232.2 (6.22)
			150	10.3	101.2 (2.71)	187.5 (5.02)	273.8 (7.34)
	10	0.69	25	1.7	40.3 (1.08)	80.5 (2.16)	81.7 (2.19)
			30	2.7	47.1 (1.26)	93.9 (2.52)	94.8 (2.54)
			40	2.8	59.9 (1.60)	119.1 (3.19)	119.7 (3.21)
			60	4.1	84.0 (2.25)	166.8 (4.47)	167.1 (4.48)
			80	5.5	107.4 (2.88)	213.0 (5.71)	213.2 (5.71)
			100	6.9	130.4 (3.50)	258.7 (6.93)	258.8 (6.94)
			125	8.6	159.0 (4.26)	315.4 (8.45)	315.4 (8.45)
			150	10.3	187.5 (5.02)	371.8 (9.96)	371.8 (9.96)
6 to 20 PSIG 0.41 to 1.4 BAR 655-771-002 Silver	10	0.69	15	1.0	16.4 (0.44)	32.0 (0.86)	51.9 (1.39)
			20	1.4	22.1 (0.59)	42.2 (1.13)	67.7 (1.81)
			40	2.8	39.9 (1.07)	75.4 (2.02)	111.0 (2.98)
			60	4.1	55.9 (1.50)	105.0 (2.81)	155.0 (4.15)
			80	5.5	71.4 (1.91)	134.0 (3.59)	198.0 (5.31)
			100	6.9	86.8 (2.33)	163.0 (4.37)	240.0 (6.43)
			125	8.6	106.0 (2.84)	199.0 (5.33)	292.0 (7.83)
			150	10.3	125.0 (3.35)	235.0 (6.30)	344.0 (9.22)
	20	1.38	25	1.7	38.8 (1.39)	65.0 (1.74)	70.0 (1.88)
			20	2.1	50.3 (1.81)	82.3 (2.21)	86.0 (2.30)
			40	2.8	69.4 (2.98)	112.0 (3.00)	114.0 (3.06)
			60	4.1	102.0 (4.15)	163.0 (4.37)	164.0 (4.40)
			80	5.5	133.0 (5.31)	211.0 (5.66)	211.0 (5.66)
			100	6.9	162.0 (6.43)	257.0 (6.89)	258.0 (6.91)
			125	8.6	198.0 (7.83)	315.0 (8.44)	315.0 (8.44)
			150	10.3	234.0 (9.22)	372.0 (9.97)	372.0 (9.97)

1. Outlet pressure setting was made at approximately 10% of the maximum capacity for the listed conditions.
- Gray areas indicate maximum flow capacity.

Outlet Pressure Range, Control Spring Number and Color	Outlet Pressure Setting [1]		Inlet Pressure		2" (DN 50) Body Size 1.91 Inches (48.5 mm) Orifice Size Droop from Setpoint		
					10%	20%	30%
	PSIG	BAR	PSIG	BAR	SCFH (Nm3/h)	SCFH (Nm3/h)	SCFH (Nm3/h)
16 to 30 PSIG 1.1 to 2.1 BAR 655-771-003 Red	20	1.38	25	1.7	24.8 (0.66)	50.4 (1.35)	70.0 (1.88)
			30	2.1	31.8 (0.85)	62.6 (1.68)	86.0 (2.30)
			40	2.8	43.5 (1.17)	84.0 (2.25)	114.0 (3.06)
			60	4.1	63.8 (1.71)	122.0 (3.27)	164.0 (4.40)
			80	5.5	83.0 (2.22)	158.0 (4.23)	211.0 (5.66)
			100	6.9	101.0 (2.71)	192.0 (5.15)	258.0 (6.91)
			125	8.6	124.0 (3.23)	235.0 (6.30)	315.0 (8.44)
			150	10.3	146.0 (3.91)	277.0 (7.42)	372.0 (9.97)
	30	2.07	35	2.4	43.0 (1.15)	80.6 (2.16)	88.2 (2.36)
			40	2.8	53.8 (1.44)	98.4 (2.64)	104.0 (2.79)
			60	4.1	88.0 (2.36)	156.0 (4.18)	159.0 (4.26)
			80	5.5	117.0 (3.14)	207.0 (5.55)	208.0 (5.57)
			100	6.9	145.0 (3.89)	255.0 (6.83)	256.0 (6.86)
			125	8.6	178.0 (4.77)	313.0 (8.39)	314.0 (8.42)
			150	10.3	211.0 (5.66)	371.0 (9.94)	371.0 (9.94)
26 to 40 PSIG 1.8 to 2.8 BAR 655-771-004 Blue	30	2.1	35	2.4	28.9 (0.78)	59.6 (1.60)	88.2 (2.36)
			40	2.8	35.7 (0.96)	71.0 (1.90)	104.0 (2.79)
			60	4.1	57.5 (1.54)	110.0 (2.95)	159.0 (4.26)
			80	5.5	76.4 (2.05)	146.0 (3.91)	208.0 (5.57)
			100	6.9	94.3 (2.53)	179.0 (4.80)	256.0 (6.86)
			125	8.6	116.0 (3.11)	220.0 (5.90)	314.0 (8.42)
			150	10.3	137.0 (3.67)	260.0 (6.97)	371.0 (9.94)
	40	2.8	45	3.1	43.5 (1.17)	96.2 (2.58)	106.0 (2.84)
			50	3.4	52.6 (1.41)	114.0 (3.06)	122.0 (3.27)
			60	4.1	68.4 (1.83)	146.0 (3.91)	151.0 (4.05)
			80	5.5	95.4 (2.56)	186.0 (4.98)	204.0 (5.47)
			100	6.9	120.0 (3.22)	232.0 (6.22)	253.0 (6.78)
			125	8.6	149.0 (3.99)	287.0 (7.69)	312.0 (8.36)
			150	10.3	177.0 (4.74)	341.0 (9.14)	370.0 (9.92)
36 to 50 PSIG 2.5 to 3.4 BAR 655-771-005 Green	40	2.8	45	3.1	36.2 (0.97)	76.1 (2.04)	106.0 (2.84)
			50	3.4	43.4 (1.16)	88.1 (2.36)	122.0 (3.27)
			60	4.1	56.2 (1.51)	110.0 (2.95)	151.0 (4.05)
			80	5.5	78.1 (2.09)	150.0 (4.02)	204.0 (5.47)
			100	6.9	97.9 (2.62)	187.0 (5.01)	253.0 (6.78)
			125	8.6	122.0 (3.27)	232.0 (6.22)	312.0 (8.36)
			150	10.3	145.0 (3.89)	276.0 (7.40)	370.0 (9.92)
	50	3.4	55	3.8	50.4 (1.35)	112.0 (3.00)	124.0 (3.32)
			60	4.1	59.5 (1.60)	130.0 (3.48)	141.0 (3.78)
			80	5.5	90.2 (2.42)	191.0 (5.12)	197.0 (5.28)
			100	6.9	116.0 (3.11)	227.0 (6.08)	248.0 (6.65)
			125	8.6	147.0 (3.94)	283.0 (7.58)	309.0 (8.28)
			150	10.3	176.0 (4.72)	338.0 (9.06)	368.0 (9.86)
45 to 60 PSIG 3.1 to 4.1 BAR 655-771-006 White	50	3.4	55	3.8	43.5 (1.17)	92.7 (2.48)	124.0 (3.32)
			60	4.1	51.0 (1.37)	105.0 (2.81)	141.0 (3.78)
			80	5.5	76.9 (2.06)	151.0 (4.05)	197.0 (5.28)
			100	6.9	99.0 (2.65)	191.0 (5.12)	248.0 (6.65)
			125	8.6	125.0 (3.35)	239.0 (6.40)	309.0 (8.28)
			150	10.3	149.0 (3.99)	285.0 (7.64)	368.0 (9.86)
	60	4.1	65	4.5	57.5 (1.54)	127.0 (3.40)	143.0 (3.83)
			70	4.8	66.5 (1.78)	146.0 (3.91)	159.0 (4.26)
			80	5.5	83.2 (2.23)	179.0 (4.80)	188.0 (5.04)
			100	6.9	112.0 (3.00)	236.0 (6.32)	242.0 (6.49)
			125	8.6	144.0 (3.86)	280.0 (7.50)	305.0 (8.17)
			150	10.3	174.0 (4.66)	336.0 (9.00)	365.0 (9.78)

1. Outlet pressure setting was made at approximately 10% of the maximum capacity for the listed conditions.
- Gray areas indicate maximum flow capacity.

P133K Regulator 25% Capacities in Thousands of SCFH of (0.6 Specific Gravity Gas)

Outlet Pressure Range, Control Spring Number and Color	Outlet Pressure Setting [1]		Inlet Pressure		2" (DN 50) Body Size 1.91 Inches (48.5 mm) Orifice Size Droop from Setpoint		
					10%	20%	30%
	PSIG	BAR	PSIG	BAR	SCFH (Nm3/h)	SCFH (Nm3/h)	SCFH (Nm3/h)
2 to 5 PSIG 0.14 to 0.34 BAR 655-771-000 Yellow	2	0.14	10	0.7	4.0 (0.11)	7.8 (0.21)	13.4 (0.36)
			20	1.4	6.4 (0.17)	12.5 (0.34)	12.2 (0.33)
			40	2.8	10.5 (0.28)	20.6 (0.55)	34.9 (0.94)
			60	4.1	14.5 (0.39)	28.4 (0.76)	48.1 (1.29)
			80	5.5	18.4 (0.49)	36.0 (0.97)	61.1 (1.64)
			100	6.9	22.3 (0.60)	43.7 (1.17)	74.0 (1.98)
			125	8.6	27.2 (0.73)	53.2 (1.43)	90.1 (2.42)
			150	10.3	32.0 (0.86)	62.7 (1.68)	106.2 (2.85)
	5	0.34	10	0.7	8.3 (0.22)	11.5 (0.31)	11.9 (0.32)
			20	1.4	14.9 (0.40)	20.3 (0.54)	20.5 (0.55)
			40	2.8	25.4 (0.68)	34.6 (0.93)	34.7 (0.93)
			60	4.1	35.2 (0.94)	47.9 (1.28)	48.0 (1.29)
			80	5.5	44.8 (1.20)	61.0 (1.64)	61.0 (1.64)
			100	6.9	54.3 (1.46)	74.0 (1.98)	74.0 (1.98)
			125	8.6	66.2 (1.77)	90.1 (2.42)	90.1 (2.42)
			150	10.3	78.1 (2.09)	106.2 (2.85)	106.2 (2.85)
4.5 to 10 PSIG 0.31 to 0.69 BAR 655-771-001 Orange	5	0.34	10	0.7	4.4 (0.12)	8.7 (0.23)	11.9 (0.32)
			20	1.4	7.8 (0.21)	15.4 (0.41)	20.5 (0.55)
			40	2.8	13.3 (0.36)	26.1 (0.70)	34.7 (0.93)
			60	4.1	18.4 (0.49)	36.2 (0.97)	48.0 (1.29)
			80	5.5	23.4 (0.63)	46.1 (1.24)	61.0 (1.64)
			100	6.9	28.4 (0.76)	55.9 (1.50)	74.0 (1.98)
			125	8.6	34.6 (0.93)	68.1 (1.83)	90.1 (2.42)
			150	10.3	40.8 (1.09)	80.2 (2.15)	106.2 (2.85)
	10	0.69	25	1.7	17.0 (0.46)	22.6 (0.61)	23.0 (0.62)
			30	2.7	19.9 (0.53)	26.5 (0.71)	26.8 (0.72)
			40	2.8	25.5 (0.68)	33.8 (0.91)	34.0 (0.91)
			60	4.1	35.9 (0.96)	47.5 (1.27)	47.6 (1.28)
			80	5.5	45.9 (1.23)	60.8 (1.63)	60.9 (1.63)
			100	6.9	55.8 (1.50)	73.9 (1.98)	73.9 (1.98)
			125	8.6	68.0 (1.82)	90.1 (2.42)	90.1 (2.42)
			150	10.3	80.2 (2.15)	106.2 (2.85)	106.2 (2.85)
6 to 20 PSIG 0.41 to 1.4 BAR 655-771-002 Silver	10	0.69	15	1.0	6.3 (0.17)	13.3 (0.36)	14.1 (0.38)
			20	1.4	8.8 (0.24)	18.3 (0.49)	18.9 (0.51)
			40	2.8	16.4 (0.44)	33.8 (0.91)	34.0 (0.91)
			60	4.1	23.1 (0.62)	47.5 (1.27)	47.6 (1.28)
			80	5.5	29.5 (0.79)	60.8 (1.63)	60.9 (1.63)
			100	6.9	35.8 (0.96)	73.9 (1.98)	73.9 (1.98)
			125	8.6	43.7 (1.17)	90.1 (2.42)	90.1 (2.42)
			150	10.3	51.5 (1.38)	106.2 (2.85)	106.2 (2.85)
	20	1.38	25	1.7	15.7 (0.42)	16.8 (0.45)	18.6 (0.50)
			20	2.1	21.6 (0.58)	22.3 (0.60)	23.5 (0.63)
			40	2.8	30.7 (0.82)	31.1 (0.83)	31.9 (0.86)
			60	4.1	45.9 (1.23)	46.1 (1.24)	46.5 (1.25)
			80	5.5	59.8 (1.60)	60.0 (1.61)	60.2 (1.61)
			100	6.9	73.3 (1.96)	73.4 (1.97)	73.5 (1.97)
			125	8.6	89.8 (2.41)	89.8 (2.41)	89.9 (2.41)
			150	10.3	106.1 (2.84)	106.1 (2.84)	106.2 (2.85)

1. Outlet pressure setting was made at approximately 10% of the maximum capacity for the listed conditions.
- Gray areas indicate maximum flow capacity.

Outlet Pressure Range, Control Spring Number and Color	Outlet Pressure Setting [1]		Inlet Pressure		2" (DN 50) Body Size 1.91 Inches (48.5 mm) Orifice Size Droop from Setpoint		
					10%	20%	30%
	PSIG	BAR	PSIG	BAR	SCFH (Nm3/h)	SCFH (Nm3/h)	SCFH (Nm3/h)
16 to 30 PSIG 1.1 to 2.1 BAR 655-771-003 Red	20	1.38	25	1.7	9.2 (0.25)	16.8 (0.45)	18.6 (0.50)
			30	2.1	12.6 (0.34)	22.3 (0.60)	23.5 (0.63)
			40	2.8	17.8 (0.48)	31.1 (0.83)	31.9 (0.86)
			60	4.1	26.6 (0.71)	46.1 (1.24)	46.5 (1.25)
			80	5.5	34.6 (0.93)	60.0 (1.61)	60.2 (1.61)
			100	6.9	42.3 (1.13)	73.4 (1.97)	73.5 (1.97)
			125	8.6	51.9 (1.39)	89.8 (2.41)	89.9 (2.41)
			150	10.3	61.3 (1.64)	106.1 (2.84)	106.2 (2.85)
	30	2.07	35	2.4	18.5 (0.50)	20.2 (0.54)	23.0 (0.62)
			40	2.8	21.5 (0.58)	26.1 (0.70)	28.1 (0.75)
			60	4.1	37.1 (0.99)	43.6 (1.17)	44.6 (1.20)
			80	5.5	50.0 (1.34)	58.4 (1.56)	59.0 (1.58)
			100	6.9	62.1 (1.66)	72.3 (1.94)	72.7 (1.95)
			125	8.6	76.6 (2.05)	89.2 (2.39)	89.4 (2.40)
			150	10.3	90.9 (2.44)	105.7 (2.83)	105.9 (2.84)
26 to 40 PSIG 1.8 to 2.8 BAR 655-771-004 Blue	30	2.1	35	2.4	10.3 (0.28)	20.2 (0.54)	23.0 (0.62)
			40	2.8	13.6 (0.36)	26.1 (0.70)	28.1 (0.75)
			60	4.1	23.4 (0.63)	43.6 (1.17)	44.6 (1.20)
			80	5.5	31.6 (0.85)	58.4 (1.56)	59.0 (1.58)
			100	6.9	39.1 (1.05)	72.3 (1.94)	72.7 (1.95)
			125	8.6	48.3 (1.29)	89.2 (2.39)	89.4 (2.40)
			150	10.3	57.3 (1.54)	105.7 (2.83)	105.9 (2.84)
	40	2.8	45	3.1	15.5 (0.42)	23.7 (0.64)	27.5 (0.74)
			50	3.4	20.3 (0.54)	29.7 (0.80)	32.7 (0.88)
			60	4.1	27.8 (0.74)	39.6 (1.06)	41.6 (1.12)
			80	5.5	39.9 (1.07)	56.0 (1.50)	57.2 (1.53)
			100	6.9	50.6 (1.36)	70.7 (1.90)	71.5 (1.92)
			125	8.6	63.2 (1.69)	88.1 (2.36)	88.6 (2.37)
			150	10.3	75.4 (2.02)	105.0 (2.81)	105.4 (2.82)
36 to 50 PSIG 2.5 to 3.4 BAR 655-771-005 Green	40	2.8	45	3.1	12.5 (0.34)	23.7 (0.64)	27.5 (0.74)
			50	3.4	16.4 (0.44)	29.7 (0.80)	32.7 (0.88)
			60	4.1	22.4 (0.60)	39.6 (1.06)	41.6 (1.12)
			80	5.5	32.1 (0.86)	56.0 (1.50)	57.2 (1.53)
			100	6.9	40.7 (1.09)	70.7 (1.90)	71.5 (1.92)
			125	8.6	50.8 (1.36)	88.1 (2.36)	88.6 (2.37)
			150	10.3	60.6 (1.62)	105.0 (2.81)	105.4 (2.82)
	50	3.4	55	3.8	17.5 (0.47)	27.0 (0.72)	31.9 (0.86)
			60	4.1	22.5 (0.60)	33.3 (0.89)	37.2 (1.00)
			80	5.5	37.1 (0.99)	52.5 (1.41)	54.6 (1.46)
			100	6.9	48.7 (1.30)	68.4 (1.83)	69.8 (1.87)
			125	8.6	61.9 (1.66)	86.6 (2.32)	87.5 (2.34)
			150	10.3	74.5 (2.00)	103.9 (2.78)	104.5 (2.80)
45 to 60 PSIG 3.1 to 4.1 BAR 655-771-006 White	50	3.4	55	3.8	14.8 (0.40)	27.0 (0.72)	31.9 (0.86)
			60	4.1	18.9 (0.51)	33.3 (0.89)	37.2 (1.00)
			80	5.5	31.1 (0.83)	52.5 (1.41)	54.6 (1.46)
			100	6.9	40.9 (1.10)	68.4 (1.83)	69.8 (1.87)
			125	8.6	52.0 (1.39)	86.6 (2.32)	87.5 (2.34)
			150	10.3	62.5 (1.68)	103.9 (2.78)	104.5 (2.80)
	60	4.1	65	4.5	19.5 (0.52)	30.4 (0.82)	36.4 (0.98)
			70	4.8	24.7 (0.66)	36.9 (0.99)	41.7 (1.12)
			80	5.5	33.1 (0.83)	47.6 (1.28)	51.1 (1.37)
			100	6.9	46.3 (1.24)	65.2 (1.75)	67.4 (1.81)
			125	8.6	60.4 (1.62)	84.5 (2.26)	85.9 (2.30)
			150	10.3	73.5 (1.97)	102.4 (2.74)	103.4 (2.77)

1. Outlet pressure setting was made at approximately 10% of the maximum capacity for the listed conditions.
- Gray areas indicate maximum flow capacity.

P133K Regulator 40% Capacities in Thousands of SCFH of (0.6 Specific Gravity Gas)

Outlet Pressure Range, Control Spring Number and Color	Outlet Pressure Setting [1]		Inlet Pressure		2" (DN 50) Body Size 1.91 Inches (48.5 mm) Orifice Size Droop from Setpoint		
					10%	20%	30%
	PSIG	BAR	PSIG	BAR	SCFH (Nm3/h)	SCFH (Nm3/h)	SCFH (Nm3/h)
2 to 5 PSIG 0.14 to 0.34 BAR 655-771-000 Yellow	2	0.14	10	0.7	6.9 (0.18)	13.2 (0.35)	19.7 (0.53)
			20	1.4	10.5 (0.28)	20.1 (0.54)	29.7 (0.80)
			40	2.8	16.6 (0.44)	31.9 (0.86)	47.2 (1.26)
			60	4.1	22.7 (0.61)	43.6 (1.17)	64.4 (1.73)
			80	5.5	28.8 (0.77)	55.2 (1.48)	81.7 (2.19)
			100	6.9	34.8 (0.93)	66.9 (1.79)	99.0 (2.65)
			125	8.6	42.4 (1.14)	81.5 (2.18)	120.5 (3.23)
			150	10.3	50.0 (1.34)	96.0 (2.57)	142.1 (3.81)
	5	0.34	10	0.7	14.5 (0.39)	19.8 (0.53)	20.4 (0.55)
			20	1.4	24.4 (0.65)	32.8 (0.88)	32.9 (0.88)
			40	2.8	39.5 (1.06)	52.9 (1.42)	52.9 (1.42)
			60	4.1	54.0 (1.45)	72.3 (1.94)	72.3 (1.94)
			80	5.5	68.5 (1.84)	91.6 (2.46)	91.6 (2.46)
			100	6.9	82.9 (2.22)	111.0 (2.98)	111.0 (2.98)
			125	8.6	101.0 (2.71)	135.2 (3.62)	135.2 (3.62)
			150	10.3	119.1 (3.19)	159.3 (4.27)	159.3 (4.27)
4.5 to 10 PSIG 0.31 to 0.69 BAR 655-771-001 Orange	5	0.34	10	0.7	3.8 (0.10)	7.1 (0.19)	10.4 (0.28)
			20	1.4	5.8 (0.16)	10.7 (0.29)	15.7 (0.42)
			40	2.8	9.2 (0.25)	17.0 (0.46)	24.9 (0.67)
			60	4.1	12.5 (0.34)	23.3 (0.62)	34.0 (0.91)
			80	5.5	15.9 (0.43)	29.5 (0.79)	43.1 (1.16)
			100	6.9	19.3 (0.52)	35.7 (0.96)	52.2 (1.40)
			125	8.6	23.5 (0.63)	43.5 (1.17)	63.6 (1.70)
			150	10.3	27.7 (0.74)	51.3 (1.38)	75.0 (2.01)
	10	0.69	25	1.7	28.2 (0.76)	37.0 (0.99)	37.4 (1.00)
			30	2.7	32.5 (0.87)	42.6 (1.14)	42.8 (1.15)
			40	2.8	40.5 (1.08)	52.9 (1.42)	52.9 (1.42)
			60	4.1	55.5 (1.49)	72.3 (1.94)	72.3 (1.94)
			80	5.5	70.4 (1.89)	91.6 (2.46)	91.6 (2.46)
			100	6.9	85.2 (2.28)	111.0 (2.98)	111.0 (2.98)
			125	8.6	103.8 (2.78)	135.2 (3.62)	135.2 (3.62)
			150	10.3	122.4 (3.28)	159.3 (4.27)	159.3 (4.27)
6 to 20 PSIG 0.41 to 1.4 BAR 655-771-002 Silver	10	0.69	15	1.0	11.3 (0.30)	23.6 (0.63)	24.7 (0.66)
			20	1.4	15.1 (0.40)	30.9 (0.83)	31.5 (0.84)
			40	2.8	26.3 (0.70)	52.9 (1.42)	52.9 (1.42)
			60	4.1	36.0 (0.96)	72.3 (1.94)	72.3 (1.94)
			80	5.5	45.6 (1.22)	91.6 (2.46)	91.6 (2.46)
			100	6.9	55.2 (1.48)	111.0 (2.98)	111.0 (2.98)
			125	8.6	67.3 (1.80)	135.2 (3.62)	135.2 (3.62)
			150	10.3	79.3 (2.12)	159.3 (4.27)	159.3 (4.27)
	20	1.38	25	1.7	28.5 (0.76)	31.2 (0.84)	33.2 (0.89)
			20	2.1	37.1 (0.99)	38.8 (1.04)	40.1 (1.08)
			40	2.8	50.4 (1.35)	51.2 (1.37)	51.9 (1.39)
			60	4.1	72.0 (1.93)	72.2 (1.94)	72.3 (1.94)
			80	5.5	91.6 (2.46)	91.6 (2.46)	91.6 (2.46)
			100	6.9	111.0 (2.98)	111.0 (2.98)	111.0 (2.98)
			125	8.6	135.2 (3.62)	135.2 (3.62)	135.2 (3.62)
			150	10.3	159.3 (4.27)	159.3 (4.27)	159.3 (4.27)

1. Outlet pressure setting was made at approximately 10% of the maximum capacity for the listed conditions.
- Gray areas indicate maximum flow capacity.

Outlet Pressure Range, Control Spring Number and Color	Outlet Pressure Setting [1]		Inlet Pressure		2" (DN 50) Body Size 1.91 Inches (48.5 mm) Orifice Size Droop from Setpoint		
					10%	20%	30%
	PSIG	BAR	PSIG	BAR	SCFH (Nm3/h)	SCFH (Nm3/h)	SCFH (Nm3/h)
16 to 30 PSIG 1.1 to 2.1 BAR 655-771-003 Red	20	1.4	25	1.7	17.2 (0.46)	31.2 (0.84)	33.2 (0.89)
			30	2.1	22.1 (0.59)	38.8 (1.04)	40.1 (1.08)
			40	2.8	29.8 (0.80)	51.2 (1.37)	51.9 (1.39)
			60	4.1	42.5 (1.14)	72.2 (1.94)	72.3 (1.94)
			80	5.5	54.1 (1.45)	91.6 (2.46)	91.6 (2.46)
			100	6.9	65.5 (1.76)	111.0 (2.98)	111.0 (2.98)
			125	8.6	79.8 (2.14)	135.2 (3.62)	135.2 (3.62)
			150	10.3	94.0 (2.52)	159.3 (4.27)	159.3 (4.27)
	30	2.07	35	2.4	34.4 (0.92)	38.7 (1.04)	41.8 (1.12)
			40	2.8	38.4 (1.03)	46.6 (1.25)	48.8 (1.31)
			60	4.1	61.2 (1.64)	71.0 (1.90)	71.6 (1.92)
			80	5.5	79.7 (2.14)	91.5 (2.45)	91.6 (2.46)
			100	6.9	96.9 (2.60)	111.0 (2.98)	111.0 (2.98)
			125	8.6	118.0 (3.16)	135.2 (3.62)	135.2 (3.62)
			150	10.3	139.1 (3.73)	159.3 (4.27)	159.3 (4.27)
26 to 40 PSIG 1.8 to 2.8 BAR 655-771-004 Blue	30	2.1	35	2.4	19.7 (0.53)	38.7 (1.04)	41.8 (1.12)
			40	2.8	24.6 (0.66)	46.6 (1.25)	48.8 (1.31)
			60	4.1	39.0 (1.04)	71.0 (1.90)	71.6 (1.92)
			80	5.5	50.7 (1.36)	91.5 (2.45)	91.6 (2.46)
			100	6.9	61.6 (1.65)	111.0 (2.98)	111.0 (2.98)
			125	8.6	75.0 (2.01)	135.2 (3.62)	135.2 (3.62)
			150	10.3	88.4 (2.37)	159.3 (4.27)	159.3 (4.27)
	40	2.8	45	3.1	30.3 (0.81)	46.2 (1.24)	50.4 (1.35)
			50	3.4	37.1 (0.99)	54.3 (1.46)	57.4 (1.54)
			60	4.1	48.0 (1.29)	67.8 (1.82)	69.7 (1.87)
			80	5.5	65.6 (1.76)	90.5 (2.42)	91.2 (2.44)
			100	6.9	80.9 (2.17)	110.9 (2.97)	111.0 (2.98)
			125	8.6	98.9 (2.65)	135.2 (3.62)	135.2 (3.62)
			150	10.3	116.6 (3.12)	159.3 (4.27)	159.3 (4.27)
36 to 50 PSIG 2.5 to 3.4 BAR 655-771-005 Green	40	2.8	45	3.1	24.6 (0.66)	46.2 (1.24)	50.4 (1.35)
			50	3.4	30.0 (0.80)	54.3 (1.46)	57.4 (1.54)
			60	4.1	38.8 (1.04)	67.8 (1.82)	69.7 (1.87)
			80	5.5	52.9 (1.42)	90.5 (2.42)	91.2 (2.44)
			100	6.9	65.3 (1.75)	110.9 (2.97)	111.0 (2.98)
			125	8.6	79.8 (2.14)	135.2 (3.62)	135.2 (3.62)
			150	10.3	94.0 (2.52)	159.3 (4.27)	159.3 (4.27)
	50	3.4	55	3.8	34.8 (0.93)	53.7 (1.44)	59.0 (1.58)
			60	4.1	41.8 (1.12)	61.9 (1.66)	66.0 (1.77)
			80	5.5	62.9 (1.69)	88.1 (2.36)	89.8 (2.41)
			100	6.9	79.7 (2.14)	110.0 (2.95)	110.7 (2.97)
			125	8.6	98.7 (2.64)	135.2 (3.62)	135.2 (3.62)
			150	10.3	116.6 (3.12)	159.3 (4.27)	159.3 (4.27)
45 to 60 PSIG 3.1 to 4.1 BAR 655-771-006 White	50	3.4	55	3.8	29.5 (0.79)	53.7 (1.44)	59.0 (1.58)
			60	4.1	35.3 (0.95)	61.9 (1.66)	66.0 (1.77)
			80	5.5	53.0 (1.42)	88.1 (2.36)	89.8 (2.41)
			100	6.9	67.2 (1.80)	110.0 (2.95)	110.7 (2.97)
			125	8.6	83.1 (2.23)	135.2 (3.62)	135.2 (3.62)
			150	10.3	98.1 (2.63)	159.3 (4.27)	159.3 (4.27)
	60	4.1	65	4.5	39.5 (1.06)	61.3 (1.64)	67.6 (1.81)
			70	4.8	46.7 (1.25)	69.5 (1.86)	74.6 (2.00)
			80	5.5	58.6 (1.57)	83.8 (2.25)	87.2 (2.34)
			100	6.9	77.8 (2.08)	108.0 (2.89)	109.6 (2.94)
			125	8.6	98.1 (2.63)	134.6 (3.61)	135.1 (3.62)
			150	10.3	116.8 (3.13)	159.3 (4.27)	159.3 (4.27)

1. Outlet pressure setting was made at approximately 10% of the maximum capacity for the listed conditions.
- Gray areas indicate maximum flow capacity.

P133K Regulator 60% Capacities in Thousands of SCFH of (0.6 Specific Gravity Gas)

Outlet Pressure Range, Control Spring Number and Color	Outlet Pressure Setting [1]		Inlet Pressure		2" (DN 50) Body Size 1.91 Inches (48.5 mm) Orifice Size Droop from Setpoint		
					10%	20%	30%
	PSIG	BAR	PSIG	BAR	SCFH (Nm3/h)	SCFH (Nm3/h)	SCFH (Nm3/h)
2 to 5 PSIG 0.14 to 0.34 BAR 655-771-000 Yellow	2	0.14	10	0.7	9.1 (0.24)	17.7 (0.47)	26.4 (0.71)
			20	1.4	14.5 (0.39)	28.3 (0.76)	42.1 (1.13)
			40	2.8	24.2 (0.65)	47.1 (1.26)	70.0 (1.88)
			60	4.1	33.5 (0.90)	65.2 (1.75)	96.9 (2.60)
			80	5.5	42.6 (1.14)	83.0 (2.22)	123.4 (3.31)
			100	6.9	51.8 (1.39)	100.8 (2.70)	149.8 (4.02)
			125	8.6	63.2 (1.69)	122.9 (3.29)	182.7 (4.90)
			150	10.3	74.5 (2.00)	145.0 (3.89)	215.6 (5.78)
	5	0.34	10	0.7	18.8 (0.50)	26.1 (0.70)	27.0 (0.72)
			20	1.4	33.6 (0.90)	45.7 (1.22)	46.1 (1.24)
			40	2.8	57.8 (1.55)	78.4 (2.10)	78.5 (2.10)
			60	4.1	80.5 (2.16)	109.1 (2.92)	109.2 (2.93)
			80	5.5	102.9 (2.76)	139.4 (3.74)	139.4 (3.74)
			100	6.9	125.1 (3.35)	169.4 (4.54)	169.4 (4.54)
			125	8.6	152.7 (4.09)	206.7 (5.54)	206.8 (5.54)
			150	10.3	180.2 (4.83)	244.0 (6.54)	244.0 (6.54)
4.5 to 10 PSIG 0.31 to 0.69 BAR 655-771-001 Orange	5	0.34	10	0.7	10.0 (0.27)	20.0 (0.54)	27.0 (0.72)
			20	1.4	17.7 (0.47)	34.8 (0.93)	46.1 (1.24)
			40	2.8	30.4 (0.82)	59.5 (1.60)	78.5 (2.10)
			60	4.1	42.3 (1.13)	82.9 (2.22)	109.2 (2.93)
			80	5.5	54.0 (1.45)	105.8 (2.84)	139.4 (3.74)
			100	6.9	65.7 (1.76)	128.6 (3.45)	169.4 (4.54)
			125	8.6	80.1 (2.15)	157.0 (4.21)	206.8 (5.54)
			150	10.3	94.6 (2.54)	185.2 (4.96)	244.0 (6.54)
	10	0.69	25	1.7	38.3 (1.03)	51.2 (1.40)	52.1 (1.40)
			30	2.7	45.1 (1.21)	60.0 (1.63)	60.7 (1.63)
			40	2.8	57.8 (1.55)	76.6 (2.07)	77.1 (2.07)
			60	4.1	81.8 (2.19)	108.0 (2.90)	108.3 (2.90)
			80	5.5	105.1 (2.82)	138.6 (3.72)	138.8 (3.72)
			100	6.9	128.0 (3.43)	168.8 (4.53)	168.9 (4.53)
			125	8.6	156.5 (4.19)	206.3 (5.53)	206.4 (5.53)
			150	10.3	184.9 (4.96)	243.7 (6.53)	243.8 (6.53)
6 to 20 PSIG 0.41 to 1.4 BAR 655-771-002 Silver	10	0.69	15	1.0	14.6 (0.39)	31.1 (0.83)	32.7 (0.88)
			20	1.4	20.0 (0.54)	41.8 (1.12)	42.9 (1.15)
			40	2.8	37.3 (1.00)	76.6 (2.05)	77.1 (2.07)
			60	4.1	52.7 (1.41)	108.0 (2.89)	108.3 (2.90)
			80	5.5	67.7 (1.81)	138.6 (3.71)	138.8 (3.72)
			100	6.9	82.5 (2.21)	168.8 (4.52)	168.9 (4.53)
			125	8.6	100.8 (2.70)	206.3 (5.53)	206.4 (5.53)
			150	10.3	119.1 (3.19)	243.7 (6.53)	243.8 (6.53)
	20	1.38	25	1.7	36.9 (0.99)	40.9 (1.10)	44.2 (1.18)
			20	2.1	49.2 (1.32)	52.0 (1.39)	54.5 (1.46)
			40	2.8	69.2 (1.86)	71.1 (1.90)	72.7 (1.95)
			60	4.1	103.6 (2.78)	104.7 (2.81)	105.7 (2.83)
			80	5.5	135.5 (3.63)	136.3 (3.65)	136.9 (3.67)
			100	6.9	166.5 (4.46)	167.0 (4.48)	167.6 (4.49)
			125	8.6	204.6 (5.48)	205.0 (5.49)	205.4 (5.50)
			150	10.3	242.3 (6.49)	242.7 (6.50)	243.0 (6.51)

1. Outlet pressure setting was made at approximately 10% of the maximum capacity for the listed conditions.
- Gray areas indicate maximum flow capacity.

Outlet Pressure Range, Control Spring Number and Color	Outlet Pressure Setting [1]		Inlet Pressure		2" (DN 50) Body Size 1.91 Inches (48.5 mm) Orifice Size Droop from Setpoint		
					10%	20%	30%
	PSIG	BAR	PSIG	BAR	SCFH (Nm3/h)	SCFH (Nm3/h)	SCFH (Nm3/h)
16 to 30 PSIG 1.1 to 2.1 BAR 655-771-003 Red	20	1.4	25	1.7	22.0 (0.59)	40.9 (1.10)	44.2 (1.18)
			30	2.1	28.9 (0.78)	52.0 (1.39)	54.5 (1.46)
			40	2.8	40.5 (1.08)	71.1 (1.90)	72.7 (1.95)
			60	4.1	60.4 (1.62)	104.7 (2.81)	105.7 (2.83)
			80	5.5	78.9 (2.12)	136.3 (3.65)	136.9 (3.67)
			100	6.9	96.9 (2.60)	167.0 (4.48)	167.6 (4.49)
			125	8.6	119.0 (3.19)	205.0 (5.49)	205.4 (5.50)
			150	10.3	141.0 (3.78)	242.7 (6.50)	243.0 (6.51)
	30	2.07	35	2.4	39.1 (1.05)	50.7 (1.36)	55.7 (1.49)
			40	2.8	50.1 (1.34)	62.1 (1.66)	66.0 (1.77)
			60	4.1	84.3 (2.26)	99.7 (2.67)	101.8 (2.73)
			80	5.5	113.6 (3.04)	132.8 (3.56)	134.3 (3.60)
			100	6.9	141.2 (3.78)	164.5 (4.41)	165.6 (4.44)
			125	8.6	174.8 (4.68)	203.1 (5.44)	203.9 (5.46)
			150	10.3	207.9 (5.57)	241.2 (6.46)	241.8 (6.48)
26 to 40 PSIG 1.8 to 2.8 BAR 655-771-004 Blue	30	2.1	35	2.4	25.0 (0.67)	50.7 (1.36)	55.7 (1.49)
			40	2.8	31.9 (0.86)	62.1 (1.66)	66.0 (1.77)
			60	4.1	53.4 (1.43)	99.7 (2.67)	101.8 (2.73)
			80	5.5	71.9 (1.93)	132.8 (3.56)	134.3 (3.60)
			100	6.9	89.3 (2.39)	164.5 (4.41)	165.6 (4.44)
			125	8.6	110.5 (2.96)	203.1 (5.44)	203.9 (5.46)
			150	10.3	131.4 (3.52)	241.2 (6.46)	241.8 (6.48)
	40	2.8	45	3.1	38.5 (1.03)	60.5 (1.62)	67.1 (1,80)
			50	3.4	48.0 (1.29)	72.1 (1.93)	77.5 (2,08)
			60	4.1	63.9 (1.71)	92.5 (2.48)	96.4 (2,58)
			80	5.5	90.8 (2.43)	128.1 (3.43)	130.7 (3,50)
			100	6.9	115.0 (3.08)	161.0 (4.32)	162.9 (3,50)
			125	8.6	144.0 (3.86)	200.5 (5.37)	201.9 (5,41)
			150	10.3	172.1 (4.61)	239.1 (6.41)	240.2 (6,44)
36 to 50 PSIG 2.5 to 3.4 BAR 655-771-005 Green	40	2.8	45	3.1	31.2 (0.84)	60.5 (1.62)	67.1 (1.80)
			50	3.4	38.8 (1.04)	72.1 (1.93)	77.5 (2.08)
			60	4.1	51.5 (1.38)	92.5 (2.48)	96.4 (2.58)
			80	5.5	73.1 (1.96)	128.1 (3.43)	130.7 (3.50)
			100	6.9	92.6 (2.48)	161.0 (4.32)	162.9 (4.37)
			125	8.6	115.8 (3.10)	200.5 (5.37)	201.9 (5.41)
			150	10.3	138.5 (3.71)	239.1 (6.41)	240.2 (6.44)
	50	3.4	55	3.8	44.2 (1.18)	70.3 (1.88)	78.6 (2.11)
			60	4.1	53.9 (1.44)	82.1 (2.20)	89.0 (2.38)
			80	5.5	84.8 (2.27)	121.7 (3.26)	125.9 (3.37)
			100	6.9	110.9 (2.97)	156.4 (4.19)	159.4 (4.27)
			125	8.6	140.9 (3.78)	197.1 (5.28)	199.3 (5.34)
			150	10.3	169.7 (4.55)	236.5 (6.34)	238.2 (6.38)
45 to 60 PSIG 3.1 to 4.1 BAR 655-771-006 White	50	3.4	55	3.8	37.3 (1.00)	70.3 (1.88)	78.6 (2.11)
			60	4.1	45.4 (1.22)	82.1 (2.20)	89.0 (2.38)
			80	5.5	71.4 (1.91)	121.7 (3.26)	125.9 (3.37)
			100	6.9	93.2 (2.50)	156.4 (4.19)	159.4 (4.27)
			125	8.6	118.4 (3.17)	197.1 (5.28)	199.3 (5.34)
			150	10.3	142.6 (3.82)	236.5 (6.34)	238.2 (6.38)
	60	4.1	65	4.5	50.0 (1.34)	80.1 (2.15)	90.1 (2.42)
			70	4.8	59.9 (1.60)	92.0 (2.47)	100.5 (2.69)
			80	5.5	77.0 (2.06)	113.2 (3.03)	119.8 (3.21)
			100	6.9	105.8 (2.84)	150.5 (4.03)	155.0 (4.15)
			125	8.6	137.5 (3.68)	192.9 (5.17)	196.2 (5.26)
			150	10.3	167.4 (4.49)	233.2 (6.25)	235.8 (6.32)

1. Outlet pressure setting was made at approximately 10% of the maximum capacity for the listed conditions.
- Gray areas indicate maximum flow capacity.

P133 Parts List

Item	Description		Qty.	Part Number
1	Iron - 2" NPT		1	664-363-000
	Steel - 2" NPT			664-361-000
	Iron - 2" 125# FF Flanged			664-370-000
	Steel - 2" 150# RF Flanged			664-373-000
2	Orifice - Aluminum		1	688-054-001
3	Belleville Washer		1	662-235-000
4	O-ring - Nitrile		1	649-317-000
	O-ring - Fluorocarbon			649-317-001
5	Cage - Aluminum		1	704-007-000
6	Cage Roll Pins		3	635-072-000
7	Stem Bearing		1	602-126-000
8	L & H Diaphragm Casing - Aluminu		1	629-230-000
	K Diaphragm Casing - Steel			629-256-000
9	L & H Bonnet - Aluminum		1	604-230-000
	K Bonnet - Iron			604-564-000
	L & H Vent Assembly Parts			
10	Flapper Stem - L & H Only		1	661-008-000
11	Lower Flapper - L & H Only		1	661-009-000
12	Upper Flapper - L & H Only		1	661-010-000
13	Seat Ring - L & H Only		1	650-136-000
14	Self-tapping Screw - L & H Only		3	648-502-000
15	Vent Port Spring - L & H Only		2	655-697-000
16	Screen - L & H Only		1	647-018-000
17	Snap Ring - L & H Only		1	693-021-000
18	L & H Bonnet Cap		1	610-058-000
	K Bonnet Cap			610-094-000
19	L & H Bonnet Cap Gasket		1	624-068-000
	K Bonnet Cap Gasket			624-101-000
20	L Adjustment Screw		1	648-504-000
	H Adjustment Screw			648-536-000
	K Adjustment Screw			648-571-000
21	2" to 4" WC, Brown Spring	L & H	1	655-697-002
	3.5" to 6" WC, Pink Spring	L & H		655-730-002
	5" to 9" WC, Tan Spring	L & H		655-730-003
	6" to 14" WC, Purple Spring	L & H		655-697-011
	8.5" to 18" WC, White Spring	L & H		655-697-005
	14" to 28" WC, Green Spring	L & H		655-697-006
	.75 to 2 PSIG, Blue Spring	L & H		655-697-007
	1.5 to 6 PSIG, Orange Spring	H	1	655-697-008
	2 to 5 PSIG, Yellow Spring	H		655-730-000
	5 to 10 PSIG, Grey Spring	H		655-630-001
	6 to 20 PSIG, Silver Spring	K	1	655-771-002
	16 to 30 PSIG, Red Spring	K		655-771-003
	26 to 40 PSIG, Blue Spring	K		655-771-004
	36 to 50 PSIG, Green Spring	K		655-771-005
	45 to 60 PSIG, White Spring	K		655-771-006
	2 to 5 PSIG, Yellow Spring	K		655-771-000
	4.5 to 10 PSIG, Orange Spring	K		655-771-001
22	L & H Range Spring Seat		1	650-171-000
	K Range Spring Seat			634-224-000
23	L Upper Diaphragm Plate - Low Pressure		1	638-071-000
	H Upper Diaphragm Plate - High Pressure			638-070-000
	K Upper Diaphragm Plate - High Pressure			638-086-000
24	L & H Nitrile Upper Diaphragm		1	618-094-000
	L & H Fluorocarbon Upper Diaphragm			618-094-001
	K Nitrile Upper Diaphragm			600-517-000
	K Fluorocarbon Upper Diaphragm			600-517-001
25	L & H Diaphragm Sealing Plate		2	638-072-000
	K Diaphragm Sealing Plate			638-087-000

Item	Description	Qty.	Part Number
26	Sealing Washer - Nitrile	2	662-231-000
	Sealing Washer - Fluorocarbon		662-231-001
27	L & H Stem - 416L Stainless Steel	1	689-007-000
	K Stem - 416L Stainless Steel		689-007-001
28	O-ring - Nitrile	2	649-000-197
	O-ring - Fluorocarbon		649-000-342
29	L & H Upper Stem Hex Nut	1	634-196-000
	K Upper Stem Hex Nut		634-146-002
30	Lower Diaphragm Plate	1	638-069-000
31	Nitrile Lower Diaphragm	1	600-511-000
	Fluorocarbon Lower Diaphragm		600-511-001
32	Washer	2	662-232-000
33	Stem Guide Bushing	1	608-082-000
34	Stem Sleeve	1	653-056-000
35	Stem E-ring	1	693-025-000
36	Roll Pin	1	635-071-000
37	Valve Disk Assembly - Nitrile	1	822-039-000
	Valve Disk Assembly - Fluorocarbon		822-039-001
38	Registration Disk	1	619-064-000
39	Washer	1	662-233-000
40	Lower Stem Hex Nut	1	634-000-031
41	Body O-ring - Nitrile	1	649-000-257
	Body O-ring - Fluorocarbon		649-318-000
42	Body/Lower Casing Studs (not shown)	4	657-016-000
43	Body/Lower Casing Lock Nut (not shown)	4	634-184-000
44	L & H Lower Casing/Bonnet Screw	12	648-506-000
	K Lower Casing/Upper Casing Screw		648-467-007
45	L & H Lower Casing/Bonnet Nut	12	634-174-000
	K Lower Casing/Upper Casing Nut		634-151-000
47	Set Screw (not shown)	2	648-534-000
48	L - Thrust Washer - High Pressure only	1	662-234-001
	H Thrust Washer - High Pressure only		662-234-000
	K Thrust Washer - High Pressure only		662-234-002
49	25% Capacity Restrictor	1	612-009-000
	40% Capacity Restrictor		612-010-000
	60% Capacity Restrictor		612-011-000
50	Restrictor Collar Set Screw	1	648-535-000
51	Upper Spring Seat - Brass	1	626-119-000
52	Vent Pipe Nipple	1	633-025-000
53	Bonnet Vent Assembly	1	836-011-000
54	Lower Casing Vent	1	622-057-000
55	Upper Diaphragm Case	1	629-255-000
56	Casing Adaptor	1	673-027-000
57	Casing Adaptor O-ring - Nitrile	1	649-309-010
	Casing Adaptor O-ring - Fluorocarbon		649-304-002
58	Lower Casing Screw	4	648-000-034
59	Diaphragm Lock Washer	1	662-000-018
60	K Roller Bearing	1	602-134-000
61	L & H Roller Washer	1	662-234-007
	K Roller Washer		662-242-000
62	Mounting Bracket Gasket	2	624-102-000
63	Adjustment Screw Jam Nut	1	634-181-000
64	Bonnet/Bracket Screws	6	648-463-002
65	Bracket/Casing Screws	6	648-463-011
66	Diaphragm Washer O-ring - Nitrile	1	649-000-150
	Diaphragm Washer O-ring - Fluorocarbon		649-000-338
67	Mounting Bracket	1	607-311-000

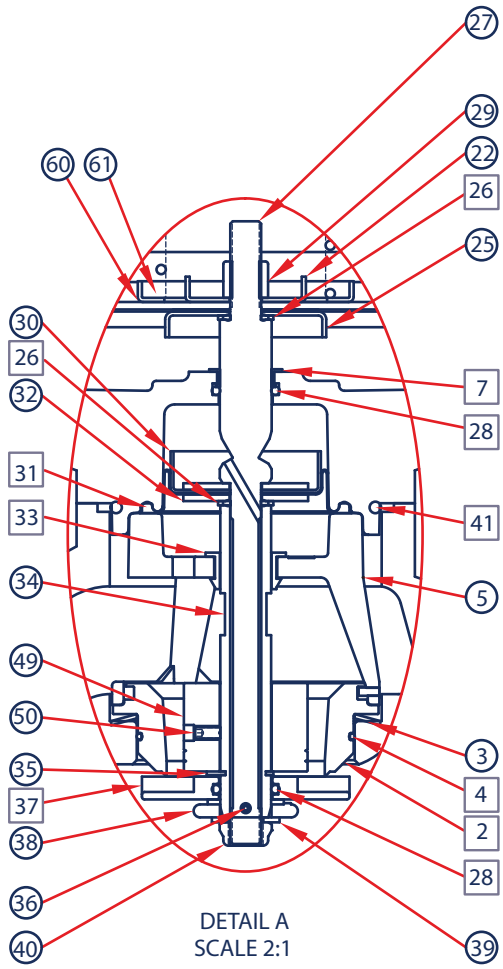

Parts included in P133 Repair Kit, 971-P13-3XX

P133L

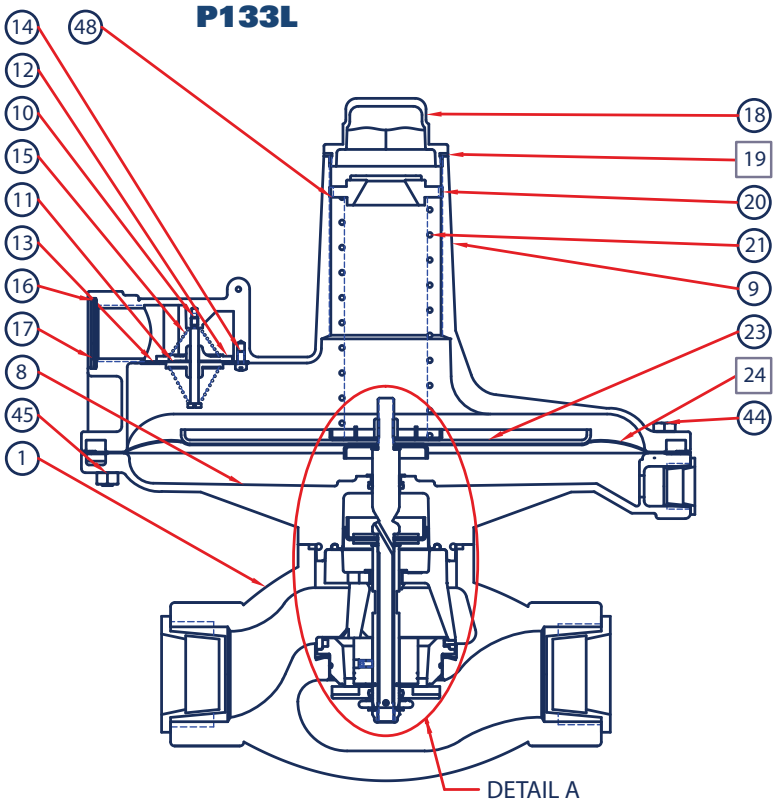

Parts included in P133 Repair Kit, 971-P13-3XX

P133H

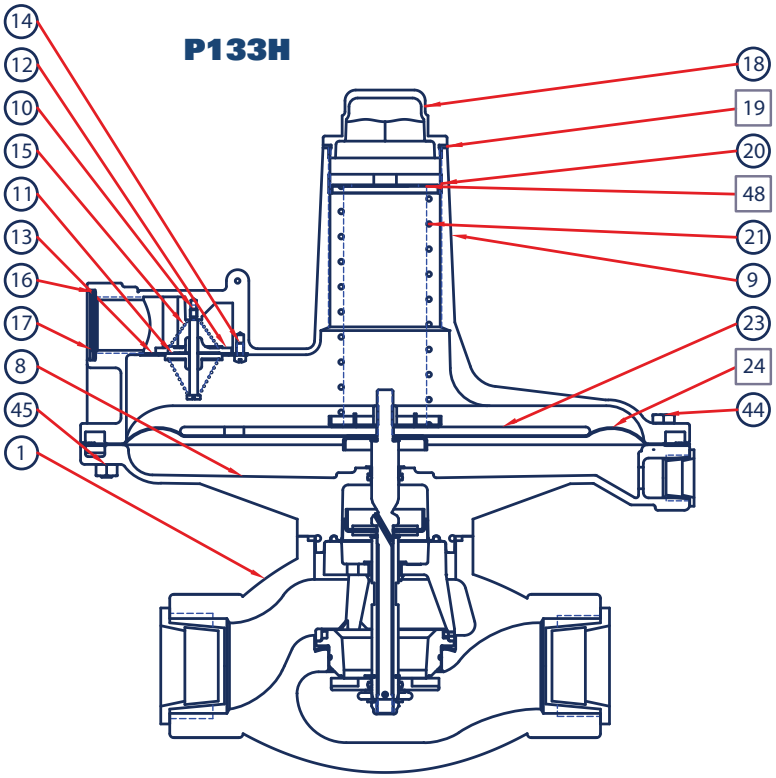

Parts included in P133 Repair Kit, 971-P13-3XX

P133K

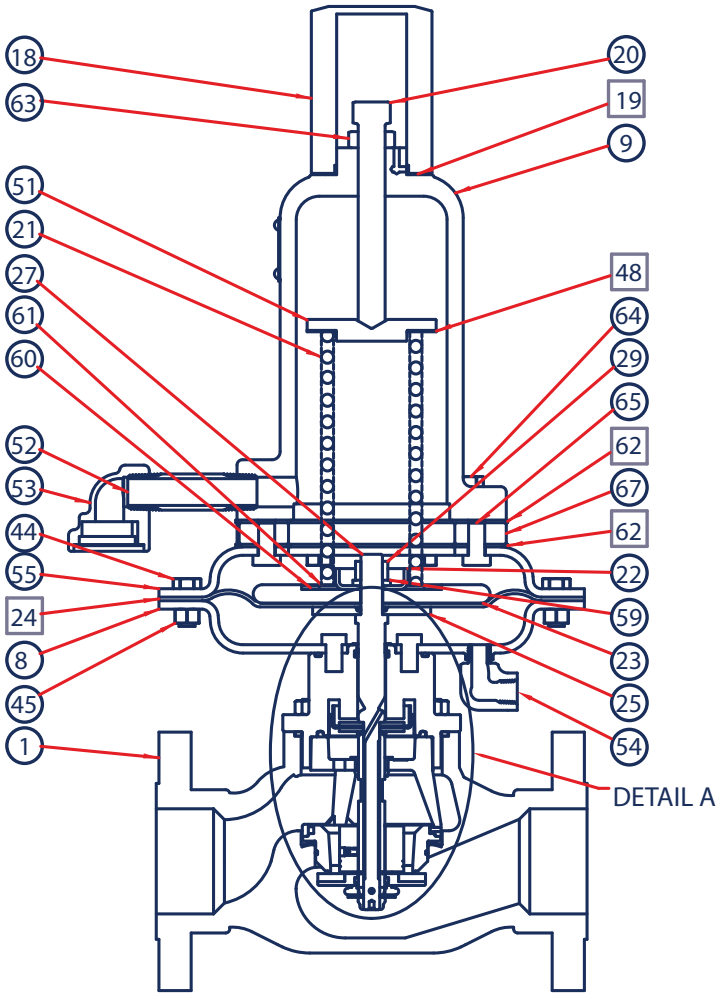

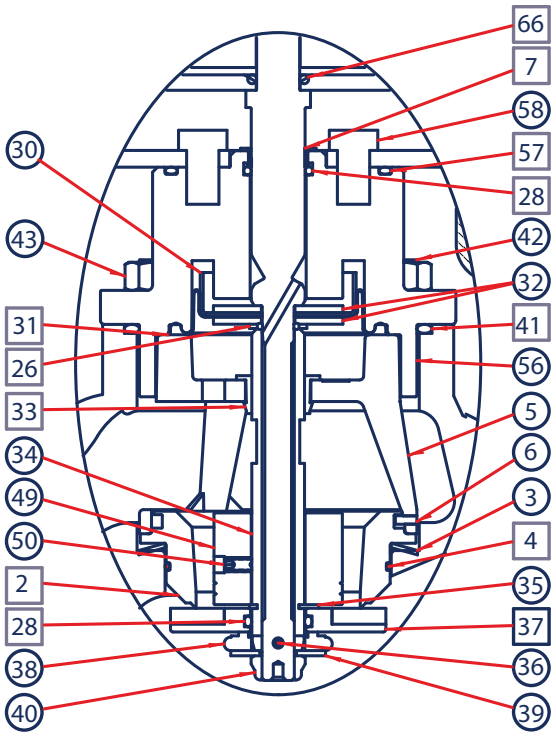

DETAIL A
SCALE 2:1

P99 Pressure Reducing Regulator

BelGAS

Applications

- City / District gate operation
- Commercial buildings
- Boilers, furnace, oven
- Plant air service

Features

- 5 Pilot choices for low to extra high pressure
- Up to 1,000 psi inlet when fitted with a P39 reducing regulator
- Loading pressure bleeds downstream – no atmospheric relief

Operations

- Double diaphragm pilot providing quick response and high accuracy requires less droop than a direct operated regulator to obtain the same pressure difference.
- Pilots assemblies can be exchanged in the field from high to low pressure.
- Seat selections include an elastomer seat disk against a sharp edge orifice or an elastomer O-ring against a flat orifice.
- The O-ring against a flat orifice should be used in all applications with 250 psi and above inlet pressure and when heavy main springs are used.

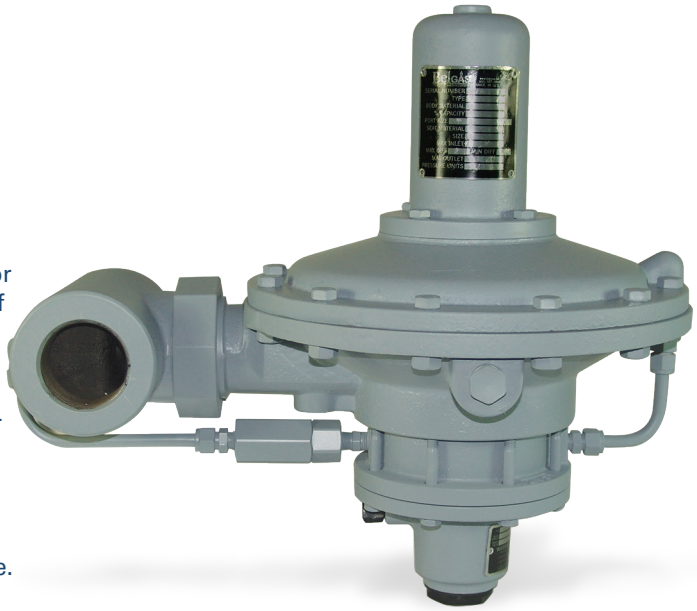

P99 Specifications

Pilot Versions	L	2" to 20 PSIG
	LD	Narrower proportional band than L
	LE	Broader proportional band than L
	H	10 to 65 PSIG
	HP	35 to 100 PSIG
Max Pilot Pressure	LD	160 PSIG
	L, LE, H	400 PSIG
	HP	600 PSIG
Temperature Ratings		
Nitrile, Neoprene	–20˚ to 180˚F	–29˚ to 82˚C
Fluorocarbon	0 to 300°F	–18˚ to 149˚ C
Weight Approximate		
	115 lbs.	52.2 kg

P99 Materials of Construction

P99 Main Regulator	
Body	Ductile Iron / WCB Steel
Spring Case	Ductile Iron
Upper and Lower Casing	Ductile Iron
Main Spring	Steel
Diaphragm	Nitrile
Diaphragm Plate	Steel
P99 Pilot Regulator	
Body	Ductile Iron
Spring Case	Ductile Iron
Casings	Ductile Iron
Diaphragms	Nitrile
Orifices	Stainless Steel / Brass
Springs	Steel
Bleed Valve	Stainless Steel
Tubing	Copper / Stainless Steel
Fittings	Brass / Stainless Steel

P99 Maximum Inlet, Pressure Drop and Differential Pressures

Max allowable inlet pressure / drop PSIG / BAR	Min differential for full stroke PSIG / BAR	Recommended disk material	Max Orifice Size	Notes
25 / 1.7	0.75 / 0.05	Nitrile or Fluorocarbon Disk	1-1/8"	Can use 1/2" through 1-1/8"
50 / 3.4	1.5 / 0.10	Neoprene or Fluorocarbon Disc	1-1/8"	Can use 1/2" through 1-1/8"
150 / 10.3	3 / 0.21	Nitrile, Neoprene or Fluorocarbon	1-1/8"	Can use 1/2" through 1-1/8"
250 / 17.2	3 / 0.21	Neoprene or Fluorocarbon O-ring	7/8"	7/8" and 1 1/8" only sizes for O-ring seat
300 / 20.7	10 / 0.69	Nylon Disk, Nitrile O-ring	1-1/8"	1-1/8" only available size for 300 inlet pressure
400 / 27.6	10 / 0.69	Nylon Disk	7/8"	7/8" and 1-1/8" only sizes for O-ring seat
1000 / 69.0	10 / 0.69	Nylon Disk	1/2"	1/2" only available orifice for 1000 inlet
Note: When choosing an O-ring seat and flat orifice, only the 7/8" and 1-1/8" orifice can be used				

P99 Part Matrix

P99												
	16											
											Output Pressure Ranges	
		12D									3 - 12" WC (LD)	
		002									.25 - 2 PSIG (L)	
		D02									.25 - 2 PSIG (LD)	
		E02									.25 - 2 PSIG (LE)	
		005									1 - 5 PSIG (L)	
		D05									1 - 5 PSIG (LD)	
		E05									1 - 5 PSIG (LE)	
		010									2 - 10 PSIG (L)	
		D10									2 - 10 PSIG (LD)	
		E10									2 - 10 PSIG (LE)	
		015									5 - 15 PSIG (L)	
		D15									5 - 15 PSIG (LD)	
		E15									5 - 15 PSIG (LE)	
		020									10 - 20 PSIG (L)	
		D20									10 - 20 PSIG (LD)	
		E20									10 - 20 PSIG (LE)	
		065									10 - 65 PSIG (H)	
		100									35 - 100 PSIG (HP)	
											Special Construction	
			0								2" NPT - IRON	
			2								2" NPT - STEEL	
			A								150 RF - STEEL	
			B								300 RF - STEEL	
											Versions	
				0							Standard	
				M							Monitor Versions	
				1							Standard w/P39 installed	Required on Pilot Pressure > 150 PSIG
				N							Monitor w/P39 installed	
											Orifice Size	
					8						1/2 Inch	
					A						5/8 Inch	
					B						3/4 Inch	
					C						7/8 Inch	
					E						1-1/8 Inch (Max 150 PSIG inlet)	
					G						7/8 x 3/8 inch	
					H						7/8 x 1/2 inch	Available 2016
					J						7/8 x 5/8 inch	
											Maximum Inlet Pressure	
						1					25 PSIG	
						2					50 PSIG	
						3					150 PSIG	
						5					250 PSIG	
						6					300 PSIG	
						7					400 PSIG	Available 2016
						8					1000 PSIG	
											Seat Material	
							0				Nitrile	
							1				Neoprene	
							2				Nylon	
							3				Fluorocarbon	
											Body Orientation	
								1			Up	
								2			Down	
								3			Right (Standard)	
								4			Left	
											Trim Material	
									0		Brass / Disk	
									1		Brass / O-ring (300 PSIG Inlet)	
									2		Stainless Steel with Disk	
									3		Stainless Steel with O-ring	
										000		

P99 Regulator Rebuild Kits

Kit Includes: **Nitrile seat disk assembly**, Diaphragm, Pusher post gasket, Body gasket, Orifice, Spring case gasket. **Pilot parts included are:** Upper relay diaphragm, O-ring seal, Relay orifice, Lower relay diaphragm, Relay disk, Bleed valve spring, Bleed valve, Bleed orifice, Closing cap gasket, Filter element

Pilot	Part Number
L Series Pilots, 7/8" Brass Orifice, Disk Seat	971-P99-LC0
L Series Pilots, 1-1/8" Brass Orifice, Disk Seat	971-P99-LE0
L Series Pilots, 7/8" 316 Orifice, Disk Seat	971-P99-LC2
L Series Pilots, 1-1/8" 316 Orifice, Disk Seat	971-P99-LE2
H Pilot, 7/8" Brass Orifice, Disk Seat	971-P99-HC0
H Pilot, 1-1/8" Brass Orifice, Disk Seat	971-P99-HE0
H Pilot, 7/8" 316 Orifice, Disk Seat	971-P99-HC2
H Pilot, 1-1/8" 316 Orifice, Disk Seat	971-P99-HE2
HP Pilot, 7/8" Brass Orifice, Disk Seat	971-P99-KC0
HP Pilot, 1-1/8" Brass Orifice, Disk Seat	971-P99-KE0
HP Pilot, 7/8" 316 Orifice, Disk Seat	971-P99-KC2
HP Pilot, 1-1/8" 316 Orifice, Disk Seat	971-P99-KE2

Kit Includes: **Nitrile seat 0-ring assembly**, Diaphragm, Pusher post gasket, Body gasket, Orifice, Spring case gasket. **Pilot parts included are**: Upper relay diaphragm, O-ring seal, Relay orifice, Lower relay diaphragm, Relay disk, Bleed valve spring, Bleed valve, Bleed orifice, Closing cap gasket, Filter element

Pilot	Part Number
L Series Pilots, 7/8" Brass Orifice, Disk Seat	971-P99-LC1
L Series Pilots, 1-1/8" Brass Orifice, Disk Seat	971-P99-LE1
L Series Pilots, 7/8" 316 Orifice, Disk Seat	971-P99-LC3
L Series Pilots, 1-1/8" 316 Orifice, Disk Seat	971-P99-LE3
H Pilot, 7/8" Brass Orifice, Disk Seat	971-P99-HC1
H Pilot, 1-1/8" Brass Orifice, Disk Seat	971-P99-HE1
H Pilot, 7/8" 316 Orifice, Disk Seat	971-P99-HC3
H Pilot, 1-1/8" 316 Orifice, Disk Seat	971-P99-HE3
HP Pilot, 7/8" Brass Orifice, Disk Seat	971-P99-KC1
HP Pilot, 1-1/8" Brass Orifice, Disk Seat	971-P99-KE1
HP Pilot, 7/8" 316 Orifice, Disk Seat	971-P99-KC3
HP Pilot, 1-1/8" 316 Orifice, Disk Seat	971-P99-KE3

P99 Outlet Pressure Ranges

Pilot Type	Maximum Pilot Supply Pressure		Outlet (Control) Pressure Ranges		Pilot Control Spring					
					Part Number	Color Code	Wire Diameter		Free Length	
	PSIG	BAR	PSIG	BAR			Inches	mm	Inches	mm
LD	160	11.0	3 to 12 inches WC[1]	7 to 30 mBAR[1]	655-734-010	Unpainted	0.080	2.03	3.00	76.2
L	400	27.6	0.25 to 2	0.02 to 0.14	655-734-002	Red	0.109	2.77	2.75	69.9
LD	160	11.0	1 to 5	0.07 to 0.35	655-734-007	Yellow	0.142	3.61	2.75	69.9
			2 to 10	0.14 to 0.69	655-734-003	Blue	0.172	4.37	2.88	73.2
LE	400	27.6	5 to 15	0.35 to 1.0	655-734-008	Brown	0.187	4.75	3.03	77.0
			10 to 20	0.69 to 1.4	655-734-009	Green	0.207	5.26	3.13	79.5
H	400	27.6	10 to 65	0.69 to 4.5	655-659-003	Green stripe	0.363	9.22	6.00	152
HP	600	41.4	35 to 100	2.4 to 6.9	655-734-012	Blue	0.200	5.08	1.69	42.3

1. Type LD pilot only.

P99 Approximate Proportional Bands

Pilot Type	Pilot Control Spring						Proportional Bands	
	Part Number	Color Code	Wire Diameter		Free Length			
			Inches	mm	Inches	mm	WC / PSI	mBAR
LD	655-734-010	Unpainted	0.080	2.03	3.25	82.6	0.1 to 0.5 WC	0.25 to 1
L	655-734-002	Red	0.109	2.77	2.75	69.9	1 to 2 WC	2 to 5
LD		Red	0.109	2.77	2.75	69.9	0.25 to 1 WC	0.62 to 2
LE		Red	0.109	2.77	2.75	69.9	5 to 8 WC	12 to 20
L, LD, and LE	655-734-007	Yellow	0.142	3.61	2.75	69.9	0.1 to 0.3 PSI	6.9 to 21
	655-734-003	Blue	0.172	4.37	2.88	73.2		
	655-734-008	Brown	0.187	4.75	2.88	73.2		
	655-734-009	Green	0.207	5.26	3.13	79.5		
H	655-659-003	Green Stripe	0.363	9.22	6.00	152.4	0.1 to 0.3 PSI	6.9 to 21
HP	655-734-012	Blue	0.209	5.08	1.69	42.3	1 to 2 PSI	68.9 to 137.8

P99 Orifice Sizes and Flow and Sizing Coefficients

Trim Construction	Orifice Size		FOR RELIEF SIZING WIDE-OPEN Cg	REGULATING Cg	C1	Km	IEC Sizing Coefficients		
	Inches	mm					X_T	F_D	F_L
Restricted capacity trim, Straight bore — Elastomer disk seat only	1/2 5/8 3/4	3 16 19	200 300 425	155 216 330	35	0.79	0.78	0.50	0.89
Full capacity trim, Elastomer disk, or O-ring seats	7/8 1-1/8	22 29	550 850	408 680					

P99 Capacities of Type 99 Regulators (Full Capacity)

Orifice Size		Inlet Pressure		Capacities in Thousands of SCFH / Nm³/h of 0.6 Specific Gravity Natural Gas[2] Outlet Pressure, PSIG (BAR)																							
				0.25 (0.02)		0.5 (0.03)		1 (0.07)		2 (0.14)		3 (0.21)		4 (0.28)		5 (0.34)		6 (0.41)		7 (0.48)		8 (0.55)		9 (0.62)		10 (0.69)	
Inch-es	mm	PSIG	BAR	SCFH	Nm³/h	SCFH	Nm³/h	SCFH	Nm³/h	SCFH	Nm³/h	SCFH	Nm³/h	SCFH	Nm³/h	SCFH	Nm³/h	SCFH	Nm³/h	SCFH	Nm³/h	SCFH	Nm³/h	SCFH	Nm³/h	SCFH	Nm³/h
7/8	22	5	0.35	7.2	0.2	7.2	0.2	6.6	0.2	6.6	0.2																
		6	0.41	7.8	0.2	7.8	0.2	7.8	0.2	7.8	0.2	6.6	0.2														
		7	0.48	9.0	0.2	9.0	0.2	9.0	0.2	9.0	0.2	7.2	0.2	6.6	0.2												
		8	0.55	9.6	0.3	9.6	0.3	9.6	0.3	9.6	0.3	7.8	0.2	7.2	0.2	6.6	0.2										
		9	0.62	10	0.3	10	0.3	10	0.3	10	0.3	9	0.2	8.4	0.2	7.2	0.2	6.6	0.2								
		10	0.69	11.4	0.3	11.4	0.3	10.8	0.3	10	0.3	9.6	0.3	9.0	0.2	8.4	0.2	7.8	0.2	7.2	0.2						
		15	1.0	14.4	0.4	14.4	0.4	14.4	0.4	14.4	0.4	14.4	0.4	13.8	0.4	13.2	0.4	13.2	0.4	12	0.3	12	0.3	11.4	0.3	7.8	0.2
		20	1.4	18.6	0.5	18.6	0.5	18.6	0.5	18.6	0.5	18.6	0.5	18.6	0.5	18	0.5	16.8	0.5	16.2	0.4	15.6	0.4	15	0.4	14.4	0.4
		25	1.7	21	0.6	21	0.6	21	0.6	21	0.6	21	0.6	21	0.6	21	0.6	21	0.6	21	0.6	19.8	0.5	19.8	0.5	19.2	0.5
		30	2.1	23	0.6	23	0.6	23	0.6	23	0.6	23	0.6	23	0.6	23	0.6	23	0.6	23	0.6	23	0.6	23	0.6	23	0.6
		35	2.4	26	0.7	26	0.7	26	0.7	26	0.7	26	0.7	26	0.7	26	0.7	26	0.7	26	0.7	26	0.7	26	0.7	26	0.7
		40	2.8	28	0.8	28	0.8	28	0.8	28	0.8	28	0.8	28	0.8	28	0.8	28	0.8	28	0.8	28	0.8	28	0.8	28	0.8
		50	3.4	34	0.9	34	0.9	34	0.9	34	0.9	34	0.9	34	0.9	34	0.9	34	0.9	34	0.9	34	0.9	34	0.9	34	0.9
		60	4.1	42	1.1	42	1.1	42	1.1	42	1.1	42	1.1	42	1.1	42	1.1	42	1.1	42	1.1	42	1.1	42	1.1	42	1.1
		75	5.2	47	1.3	47	1.3	47	1.3	47	1.3	47	1.3	47	1.3	47	1.3	47	1.3	47	1.3	47	1.3	47	1.3	47	1.3
		100	6.9	59	1.6	59	1.6	59	1.6	59	1.6	59	1.6	59	1.6	59	1.6	59	1.6	59	1.6	59	1.6	59	1.6	59	1.6
		125	8.6	73	2.0	73	2.0	73	2.0	73	2.0	73	2.0	73	2.0	73	2.0	73	2.0	73	2.0	73	2.0	73	2.0	73	2.0
		150	10.3	86	2.3	86	2.3	86	2.3	86	2.3	86	2.3	86	2.3	86	2.3	86	2.3	86	2.3	86	2.3	86	2.3	86	2.3
		175	12.1	96	2.6	96	2.6	96	2.6	96	2.6	96	2.6	96	2.6	96	2.6	96	2.6	96	2.6	96	2.6	96	2.6	96	2.6
		200	13.8	108	2.9	108	2.9	108	2.9	108	2.9	108	2.9	108	2.9	108	2.9	108	2.9	108	2.9	108	2.9	108	2.9	108	2.9
		225	15.5	123	3.3	123	3.3	123	3.3	123	3.3	123	3.3	123	3.3	123	3.3	123	3.3	123	3.3	123	3.3	123	3.3	123	3.3
		250	17.2	132	3.5	132	3.5	132	3.5	132	3.5	132	3.5	132	3.5	132	3.5	132	3.5	132	3.5	132	3.5	132	3.5	132	3.5
		300	20.7	162	4.3	162	4.3	162	4.3	162	4.3	162	4.3	162	4.3	162	4.3	162	4.3	162	4.3	162	4.3	162	4.3	162	4.3
		350	24.1	188	5.0	188	5.0	188	5.0	188	5.0	188	5.0	188	5.0	188	5.0	188	5.0	188	5.0	188	5.0	188	5.0	188	5.0
		400	27.6	215	5.8	215	5.8	215	5.8	215	5.8	215	5.8	215	5.8	215	5.8	215	5.8	215	5.8	215	5.8	215	5.8	215	5.8
1-1/8	29	1	0.07	5	0.1[2]																						
		2	0.14	7.5	0.2[2]	7.5	0.2[2]	6	0.2[2]																		
		3	0.21	9	0.2	9	0.2	8.5	0.2[2]																		
		4	0.28	10	0.3	10	0.3	10	0.3	8.5	0.2[2]																
		5	0.35	12	0.3	12	0.3	12	0.3	10	0.3	9	0.2[2]														
		6	0.41	13	0.3	13	0.3	13	0.3	12	0.3	10	0.3	9	0.2[2]												
		7	0.48	15	0.4	15	0.4	15	0.4	13	0.3	12	0.3	10	0.3	9	0.2[2]										
		8	0.55	16	0.4	16	0.4	16	0.4	14	0.4	13	0.3	12	0.3	11	0.3	9	0.2[2]								
		9	0.62	17	0.5	17	0.5	17	0.5	16	0.4	15	0.4	14	0.4	12	0.3	11	0.3	10	0.3[2]						
		10	0.69	19	0.5	19	0.5	19	0.5	17	0.5	16	0.4	15	0.4	14	0.4	13	0.3	12	0.3	10	0.3[2]				
		15	1.0	24	0.6	24	0.6	24	0.6	24	0.6	24	0.6	23	0.6	22	0.6	22	0.6	20	0.5	20	0.5	19	0.5	13	0.4
		20	1.4	31	0.8	31	0.8	31	0.8	31	0.8	31	0.8	31	0.8	30	0.8	30	0.8	27	0.7	26	0.7	25	0.7	24	0.6
		25	1.7	35	0.9	35	0.9	35	0.9	35	0.9	35	0.9	35	0.9	35	0.9	35	0.9	35	0.9	33	0.9	33	0.9	32	0.9
		30	2.1	39	1.0	39	1.0	39	1.0	39	1.0	39	1.0	39	1.0	39	1.0	39	1.0	39	1.0	39	1.0	39	1.0	39	1.0
		35	2.4	44	1.2	44	1.2	44	1.2	44	1.2	44	1.2	44	1.2	44	1.2	44	1.2	44	1.2	44	1.2	44	1.2	44	1.2
		40	2.8	47	1.3	47	1.3	47	1.3	47	1.3	47	1.3	47	1.3	47	1.3	47	1.3	47	1.3	47	1.3	47	1.3	47	1.3
		50	3.4	57	1.5	57	1.5	57	1.5	57	1.5	57	1.5	57	1.5	57	1.5	57	1.5	57	1.5	57	1.5	57	1.5	57	1.5
		60	4.2	65	1.7	65	1.7	65	1.7	65	1.7	65	1.7	65	1.7	65	1.7	65	1.7	65	1.7	65	1.7	65	1.7	65	1.7
		75	5.2	78	2.1	78	2.1	78	2.1	78	2.1	78	2.1	78	2.1	78	2.1	78	2.1	78	2.1	78	2.1	78	2.1	78	2.1
		100	6.9	99	2.7	99	2.7	99	2.7	99	2.7	99	2.7	99	2.7	99	2.7	99	2.7	99	2.7	99	2.7	99	2.7	99	2.7
		125	8.6	122	3.3	122	3.3	122	3.3	122	3.3	122	3.3	122	3.3	122	3.3	122	3.3	122	3.3	122	3.3	122	3.3	122	3.3
		150	10.3	143	3.8	143	3.8	143	3.8	143	3.8	143	3.8	143	3.8	143	3.8	143	3.8	143	3.8	143	3.8	143	3.8	143	3.8
		175	12.1	160	4.3	160	4.3	160	4.3	160	4.3	160	4.3	160	4.3	160	4.3	160	4.3	160	4.3	160	4.3	160	4.3	160	4.3
		200	13.8	180	4.8	180	4.8	180	4.8	180	4.8	180	4.8	180	4.8	180	4.8	180	4.8	180	4.8	180	4.8	180	4.8	180	4.8
		225	15.5	205	5.5	205	5.5	205	5.5	205	5.5	205	5.5	205	5.5	205	5.5	205	5.5	205	5.5	205	5.5	205	5.5	205	5.5
		250	17.2	220	5.9	220	5.9	220	5.9	220	5.9	220	5.9	220	5.9	220	5.9	220	5.9	220	5.9	220	5.9	220	5.9	220	5.9
		300	20.7	265	7.1	265	7.1	265	7.1	265	7.1	265	7.1	265	7.1	265	7.1	265	7.1	265	7.1	265	7.1	265	7.1	265	7.1
						L Pilot																					
																										H	

1. When sizing a regulator, always use the lowest inlet pressure, the highest outlet pressure, and the maximum capacity desired.
2. Requires 0.75 PSIG / 0.05 bar minimum differential pressure construction.
– Shaded areas indicate no capacity due to differential pressure requirement.

P99 Capacities of Type 99 Regulators (Full Capacity)

BelGAS

Orifice Size		Inlet Pressure		Capacities in Thousands of SCFH / Nm³/h of 0.6 Specific Gravity Natural Gas[2] Outlet Pressure, PSIG (BAR)																					
				15 (1.0)		20 (1.4)		25 (1.7)		30 (2.1)		35 (2.4)		40 (2.8)		45 (3.1)		50 (3.5)		60 (4.1)		75 (5.2)		100 (6.9)	
Inches	mm	PSIG	BAR	SCFH	Nm³/h	SCFH	Nm³/h	SCFH	Nm³/h	SCFH	Nm³/h	SCFH	Nm³/h	SCFH	Nm³/h	SCFH	Nm³/h	SCFH	Nm³/h	SCFH	Nm³/h	SCFH	Nm³/h	SCFH	Nm³/h
7/8	22	20	1.4	10.8	0.3																				
		25	1.7	16.2	0.4	12	0.3																		
		30	2.1	20	0.5	17	0.5	12.5	0.3																
		35	2.4	24	0.6	21	0.6	18	0.5	13	0.3														
		40	2.8	28	0.8	26	0.7	23	0.6	19	0.5	14.4	0.4												
		50	3.4	34	0.9	34	0.9	31	0.8	28	0.8	25	0.7	21	0.6	15.5	0.4								
		60	4.1	42	1.1	42	1.1	42	1.1	37	1.0	35	0.9	30	0.8	27	0.7	23	0.6						
		75	5.2	47	1.3	47	1.3	47	1.3	47	1.3	47	1.3	45	1.2	41	1.1	37	1.0	30	0.8				
		100	6.9	59	1.6	59	1.6	59	1.6	59	1.6	59	1.6	59	1.6	59	1.6	59	1.6	53	1.4	44	1.2		
		125	8.6	73	2.0	73	2.0	73	2.0	73	2.0	73	2.0	73	2.0	73	2.0	73	2.0	73	2.0	66	1.8	48	1.3
		150	10.3	86	2.3	86	2.3	86	2.3	86	2.3	86	2.3	86	2.3	86	2.3	86	2.3	86	2.3	86	2.3	72	1.9
		175	12.1	96	2.6	96	2.6	96	2.6	96	2.6	96	2.6	96	2.6	96	2.6	96	2.6	96	2.6	96	2.6	93	2.5
		200	13.8	108	2.9	108	2.9	108	2.9	108	2.9	108	2.9	108	2.9	108	2.9	108	2.9	108	2.9	108	2.9	108	2.9
		225	15.5	123	3.3	123	3.3	123	3.3	123	3.3	123	3.3	123	3.3	123	3.3	123	3.3	123	3.3	123	3.3	123	3.3
		250	17.2	132	3.5	132	3.5	132	3.5	132	3.5	132	3.5	132	3.5	132	3.5	132	3.5	132	3.5	132	3.5	132	3.5
		300	20.7	162	4.3	162	4.3	162	4.3	162	4.3	162	4.3	162	4.3	162	4.3	162	4.3	162	4.3	162	4.3	162	4.3
		350	24.1	188	5.0	188	5.0	188	5.0	188	5.0	188	5.0	188	5.0	188	5.0	188	5.0	188	5.0	188	5.0	188	5.0
		400	27.6	215	5.8	215	5.8	215	5.8	215	5.8	215	5.8	215	5.8	215	5.8	215	5.8	215	5.8	215	5.8	215	5.8
1-1/8	29	20	1.4	18	0.5																				
		25	1.7	27	0.7	20	0.5																		
		30	2.1	34	0.9	28	0.8	21	0.6																
		35	2.4	40	1.1	35	0.9	30	0.8	22	0.6														
		40	2.8	47	1.3	43	1.2	38	1.0	32	0.9	24	0.6												
		50	3.4	57	1.5	57	1.5	52	1.4	47	1.3	42	1.1	35	0.9	26	0.7								
		60	4.2	65	1.7	65	1.7	65	1.7	62	1.7	58	1.6	50	1.3	45	1.2	38	1.0						
		75	5.2	78	2.1	78	2.1	78	2.1	78	2.1	78	2.1	74	2.0	68	1.8	32	0.9	50	1.3				
		100	6.9	99	2.7	99	2.7	99	2.7	99	2.7	99	2.7	99	2.7	99	2.7	99	2.7	99	2.7	88	2.4		
		125	8.6	122	3.3	122	3.3	122	3.3	122	3.3	122	3.3	122	3.3	122	3.3	122	3.3	122	3.3	122	3.3	80	2.1
		150	10.3	143	3.8	143	3.8	143	3.8	143	3.8	143	3.8	143	3.8	143	3.8	143	3.8	143	3.8	143	3.8	120	3.2
		175	12.1	160	4.3	160	4.3	160	4.3	160	4.3	160	4.3	160	4.3	160	4.3	160	4.3	160	4.3	160	4.3	155	4.2
		200	13.8	180	4.8	180	4.8	180	4.8	180	4.8	180	4.8	180	4.8	180	4.8	180	4.8	180	4.8	180	4.8	180	4.8
		225	15.5	205	5.5	205	5.5	205	5.5	205	5.5	205	5.5	205	5.5	205	5.5	205	5.5	205	5.5	205	5.5	205	5.5
		250	17.2	220	5.9	220	5.9	220	5.9	220	5.9	220	5.9	220	5.9	220	5.9	220	5.9	220	5.9	220	5.9	220	5.9
		300	20.7	265	7.1	265	7.1	265	7.1	265	7.1	265	7.1	265	7.1	265	7.1	265	7.1	265	7.1	265	7.1	265	7.1
				L Pilot																					
				H Pilot																					
												HP Pilot													

1. When sizing a regulator, always use the lowest inlet pressure, the highest outlet pressure, and the maximum capacity desired.
2. Requires 0.75 PSIG / 0.05 bar minimum differential pressure construction.
– Shaded areas indicate no capacity due to differential pressure requirement.

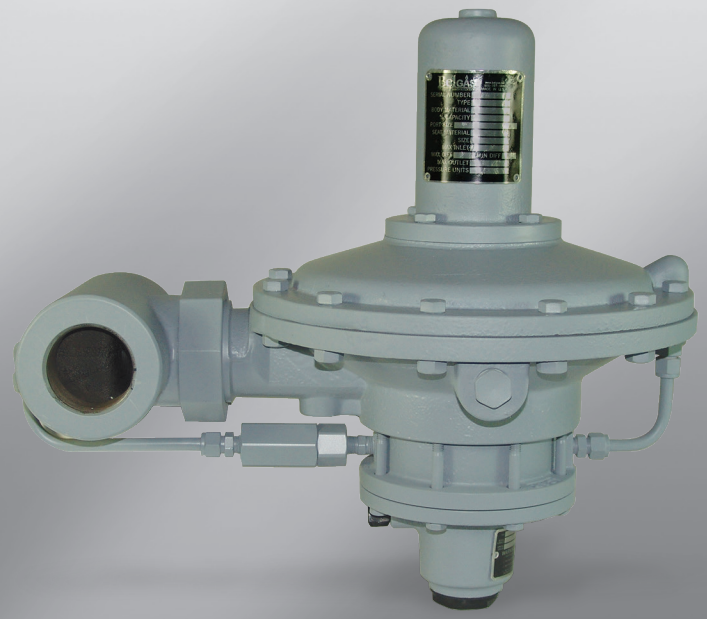

P99 Dimensions

P99L

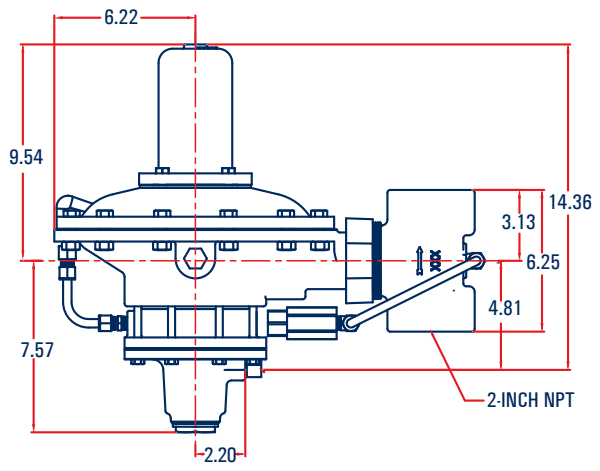

P99 Flanged with Type 61L Pilot

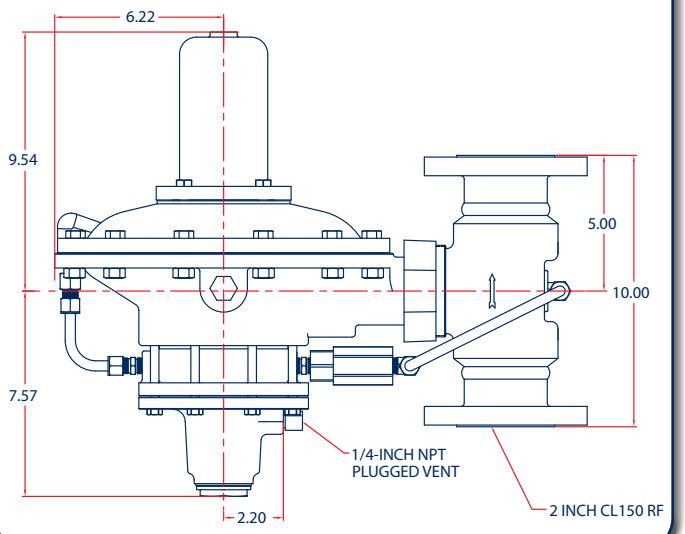

P99H

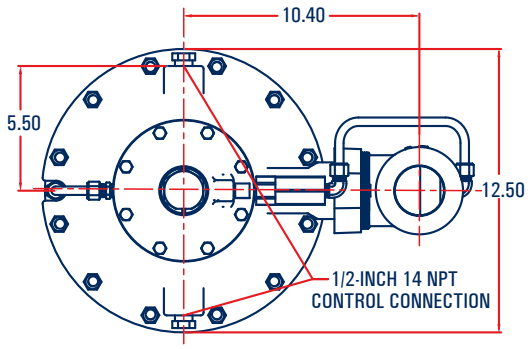

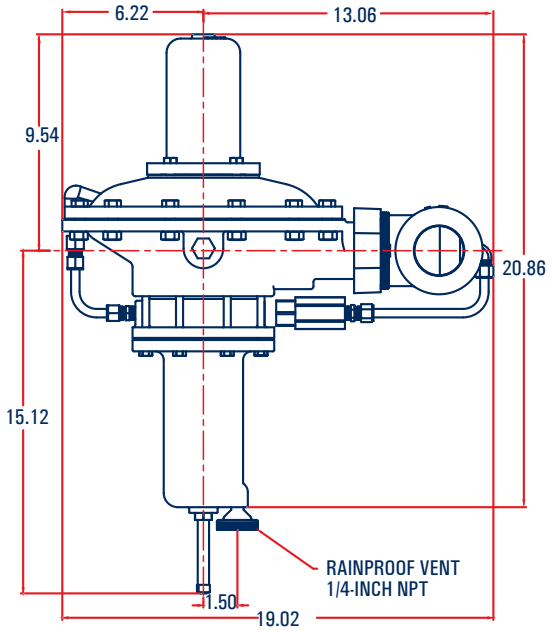

P99 HP

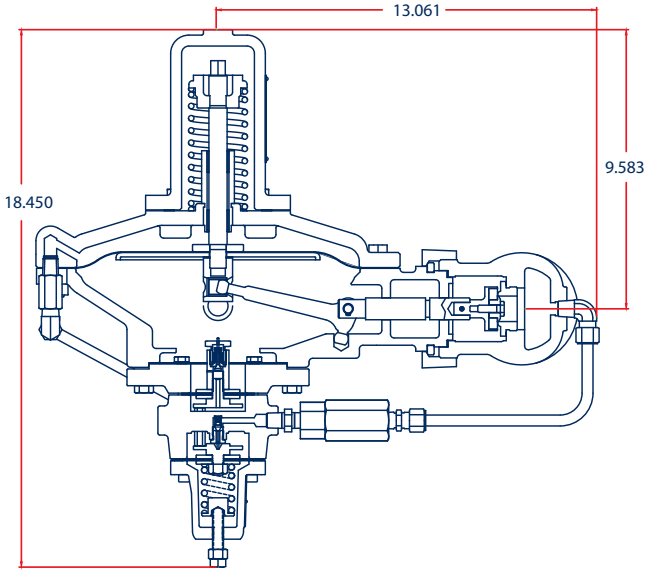

P99 HP Pilot with P39 & Relief Valve

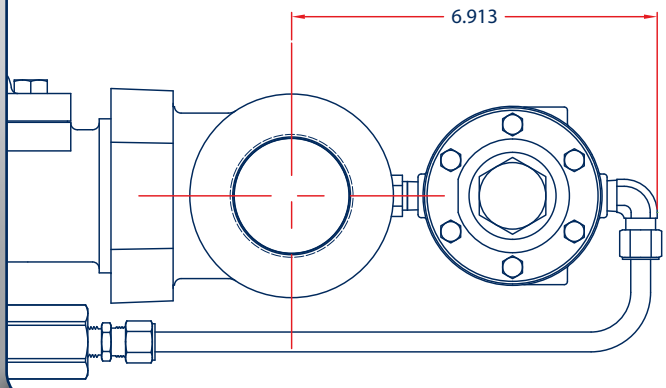

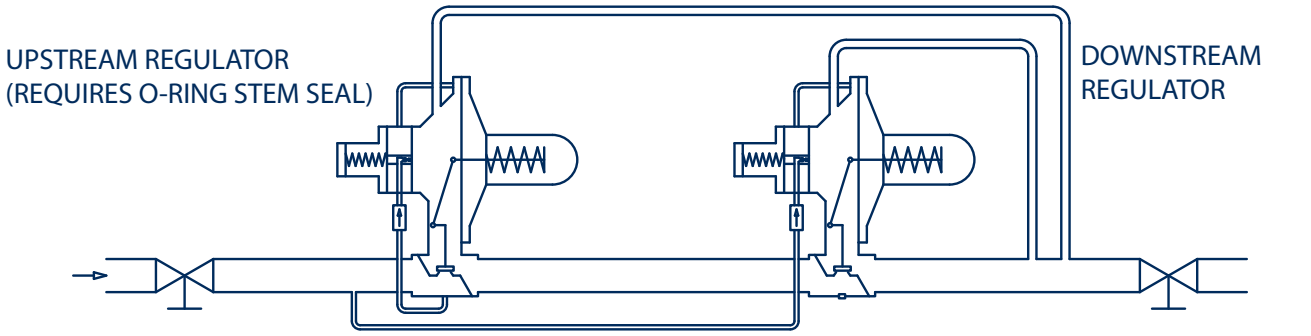

MONITOR REGULATOR MAY BE PLACED EITHER UPSTREAM OR DOWNSTREAM. REQUIRES ADDITIONAL PIPING

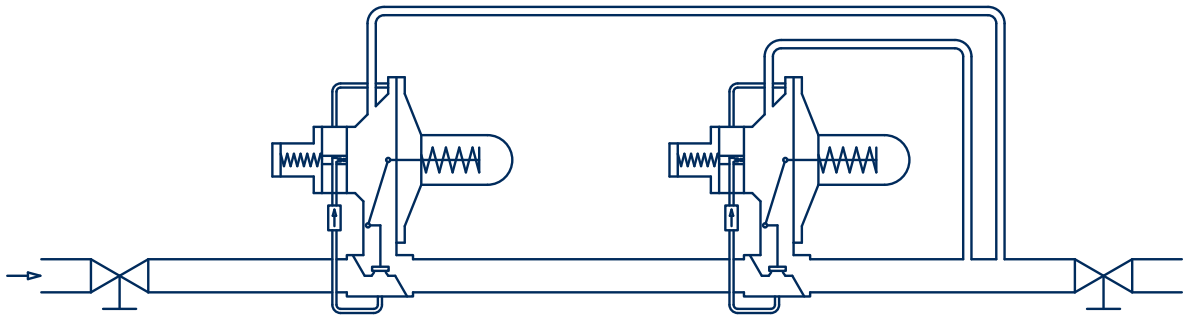

P99 WIDE-OPEN MONITOR INSTALLATIONS

Monitoring Systems

A monitor unit can serve as overpressure protection in the case of a wide-open failure of the main regulator. A P99 that is configured as a monitor regulator has a modified lower casing that includes an O-ring seal around the valve carrier.

The system should be set up as seen above with the O-ring seal unit upstream. The control line of the upstream regulator must be installed downstream of the second regulator. During normal operation, the monitor regulator remains wide open. If the main regulator fails open, the monitor regulator will take over at a slightly higher pressure.

When adjusting the set point of a wide-open monitor, first increases the set point of both regulators to a point above the desired monitor setting by turning the adjustment screws clockwise. Lower the set point of the monitor regulator to the desired pressure, and then adjust the main regulator. Be sure that the difference between the monitor and main regulator set points is at least equal to the minimum differential pressure for full stroke of the main spring.

P99 Parts with L Pilot

Item	Description	Qty.	Part Number
1	Spring Case - Cast Iron	1	604-260-000
2	Main Spring Seat	1	626-109-000
	Main Spring Seat - 1000 PSIG	1	626-109-001
3	**Main Springs**		
	25 PSIG Diff.	1	655-734-006
	50 PSIG Diff.	1	655-734-005
	250 PSIG Diff.	1	655-734-004
	300 PSIG Diff.	1	655-659-001
4	SS Diaphragm Rod	1	646-548-000
5	Brass Diaphragm Rod Guide Assembly	1	626-111-001
	Brass Diaphragm Rod Guide - SS	1	626-110-000
6	Spring Case Gasket	1	624-081-000
7	Brass Collar	1	612-012-001
	Stainless Collar	1	612-012-000
8	Pusher Post Gasket	1	624-079-000
9	Brass Pusher Post Assembly	1	637-332-001
	Brass Pusher Post - Stainless	1	637-331-000
10	Diaphragm Plate - Steel	1	638-075-000
11	Regulator Diaphragm - Nitrile	1	618-097-000
12	Cap Screw	4	648-467-003
13	Upper Casing - Cast Iron	1	604-261-000
14	Lever - Steel	1	703-010-000
15	Casing Cap Screw	12	648-467-004
16	Casing Hex Nut	12	634-199-000
17	Retaining Ring for Brass Trim	2	693-026-000
18	Lever Pin	1	635-073-000
19	Valve Carrier - Brass	1	651-102-001
	Valve Carrier - Stainless	1	651-102-000
20	Body Snap Ring	2	644-060-000
21	Union Nut	1	634-198-000
22	Body Gasket	1	624-080-000
23	Cotter Pin	1	635-000-042
25	7/8" O-ring Seat Assembly - Brass	1	822-061-0C1
	1-1/8" O-ring Seat Assembly - Brass	1	822-061-0E1
	7/8" O-ring Seat Assembly - 316	1	822-061-0C3
	1-1/8" O-ring Seat Assembly - 316	1	822-061-0E3
	7/8" Disk Seat Assembly - Brass	1	822-061-0C0
	1-1/8" Disk Seat Assembly - Brass	1	822-061-0E0
	7/8" Disk Seat Assembly - 316	1	822-061-0C2
	1-1/8" Disk Seat Assembly - 316	1	822-061-0E2
26	Brass Disk Orifice - 7/8"	1	688-057-001
	Brass Disk Orifice - 1-1/8"	1	688-058-001
	Stainless Disk Orifice - 7/8"	1	688-057-000
	Stainless Disk Orifice - 1-1/8"	1	688-058-000
	Brass O-ring Orifice - 7/8"	1	688-062-001
	Brass O-ring Orifice - 1-1/8"	1	688-063-001
	Stainless O-ring Orifice - 7/8"	1	688-062-000
	Stainless O-ring Orifice - 1-1/8"	1	688-063-000
	Stainless Oriface/Nitrile- 1/2"	1	822-018-000
27	2" NPT Iron	1	664-379-000
	2" NPT Steel	1	664-390-000

Item	Description	Qty.	Part Number
30	Lower Casing - Cast Iron	1	629-236-000
	Lower Casing - Monitor	1	802-124-000
31	Relay Valve Body	1	664-380-000
32	L, LE, LD Spring Case	1	604-262-000
33	Closing Cap - L, LE and LD	1	610-056-000
34	Gasket	1	624-069-000
35	L, LE and LD Screw	1	648-499-000
36	**Pilot Control Springs**		
	0.25 to 2 PSIG - Red	1	655-734-002
	1 to 5 PSIG - Yellow	1	655-734-007
	2 to 10 PSIG - Blue	1	655-734-003
	.5 to 15 PSIG - Brown	1	655-734-008
	10 to 20 PSIG - Green	1	655-734-009
37	L and LD Diaphragm Head	1	638-076-000
	LE and H Diaphragm Head	1	638-077-000
38	Upper Relay Diaphragm	1	618-098-000
39	Relay Yoke Assembly	1	670-035-000
40	L, LE and LD Relay Diaphragm - Nitrile	1	618-099-000
41	L, LE and LD Relay Diaphragm Head	1	638-076-001
42	L, LE and LD Spring Seat	1	650-175-000
43	Pipe Plug - (not shown)	1	639-119-000
44	Cap Screw	8	648-467-004
46	L, LE and LD Vent Assembly	1	836-004-000
47	Pilot Adjustment Screw Nut	1	634-000-056
48	Bleed Orifice - Stainless	1	688-056-000
49	Diaphragm Nut - Brass	1	634-200-001
	Diaphragm Nut - Stainless		634-200-000
50	O-ring Seal - Nitrile	1	649-309-002
51	Relay Orifice - 25 PSIG Drop	1	688-055-001
	Relay Orifice - > 25 PSIG Drop	1	688-055-000
52	L, LE and LD Bleed Valve	1	636-058-000
53	LD Bleed Valve Spring	1	655-734-010
	L and LE Bleed Valve Spring	1	655-734-000
54	Relay Disk Assembly - Nitrile	1	822-042-002
55	Elbow Fitting - Brass	1	622-061-000
56	Pilot Supply Tubing - Horizontal	1	660-081-001
	Pilot Supply Tubing - Vertical	1	660-081-002
57	Male Fitting - Brass	2	662-062-000
58	P590 Brass Line Filter - Brass	1	P590
	590 Stainless Filter	1	P594
	P590 Element - Cellulose	1	677-052-000
59	Pipe Nipple - Steel - SS	2	633-022-000
60	Loading Tubing - Copper	1	660-081-000
61	Female Fitting - Brass	1	662-063-000
62	Nameplate	1	632-546-000
63	Pilot Nameplate	1	632-547-000
64	Drive Screw	4	648-464-000

P99 Regulator with L Series Pilot Parts List

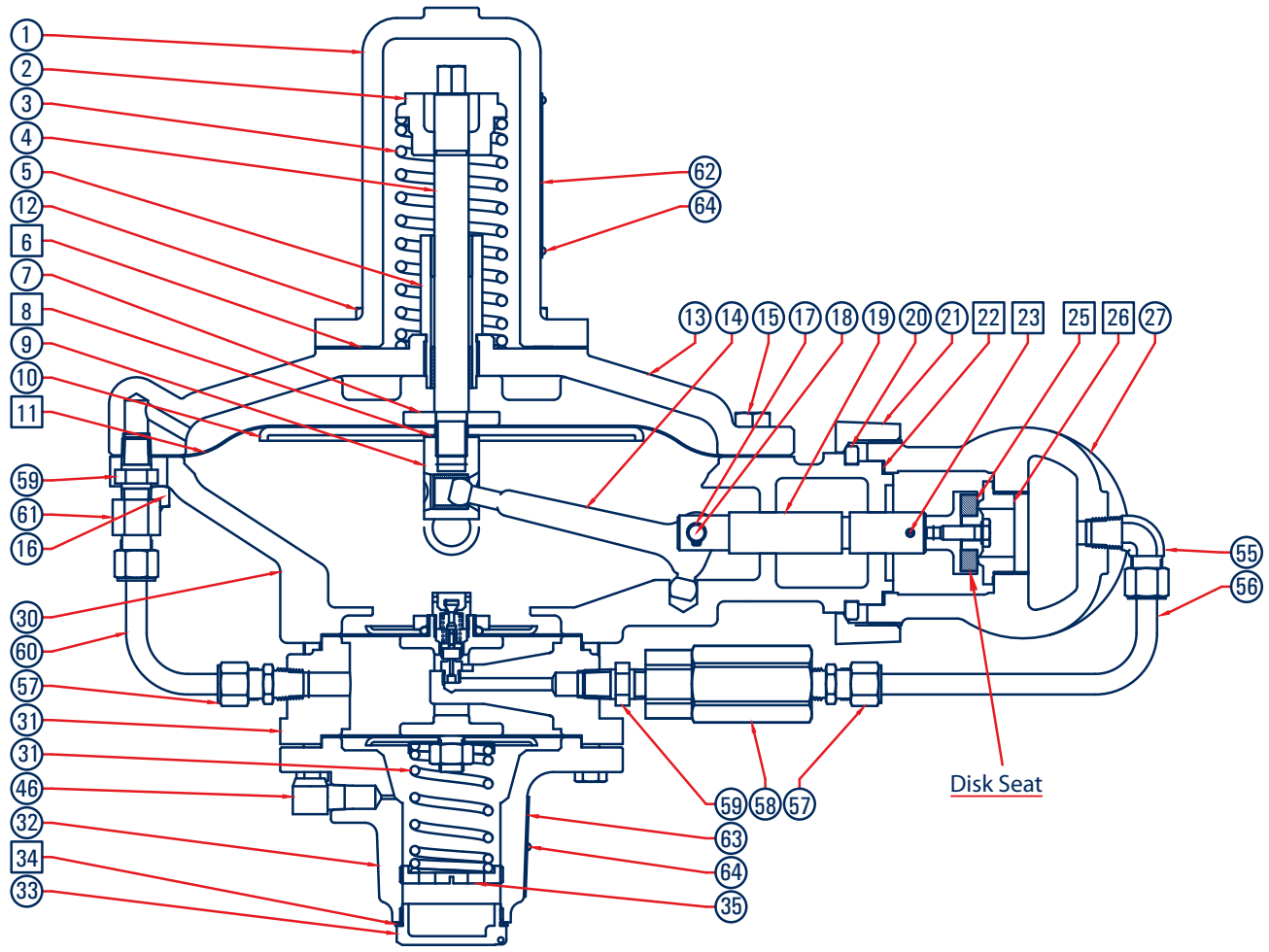

□ - PARTS INCLUDED IN REPAIR KITS 971-P99-XXX

P99 Monitor Housing and O-ring Seat

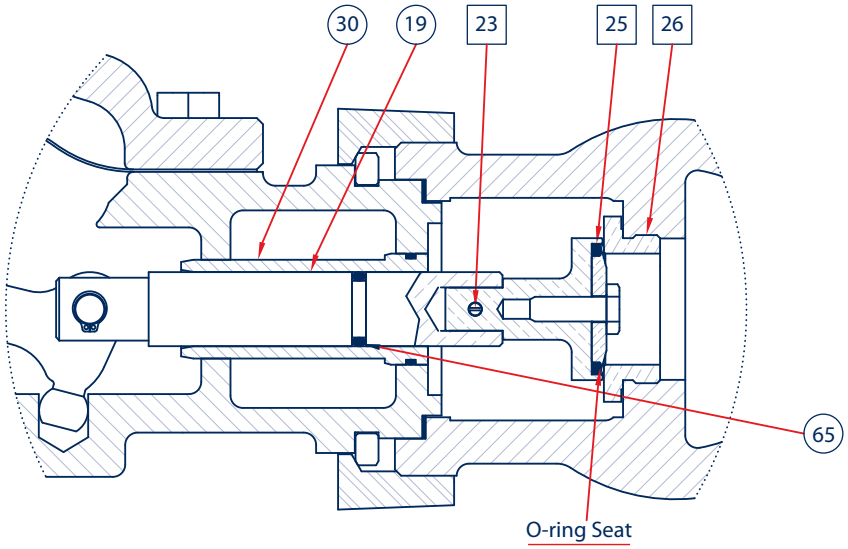

P99 Regulator with H Series Pilot Parts List

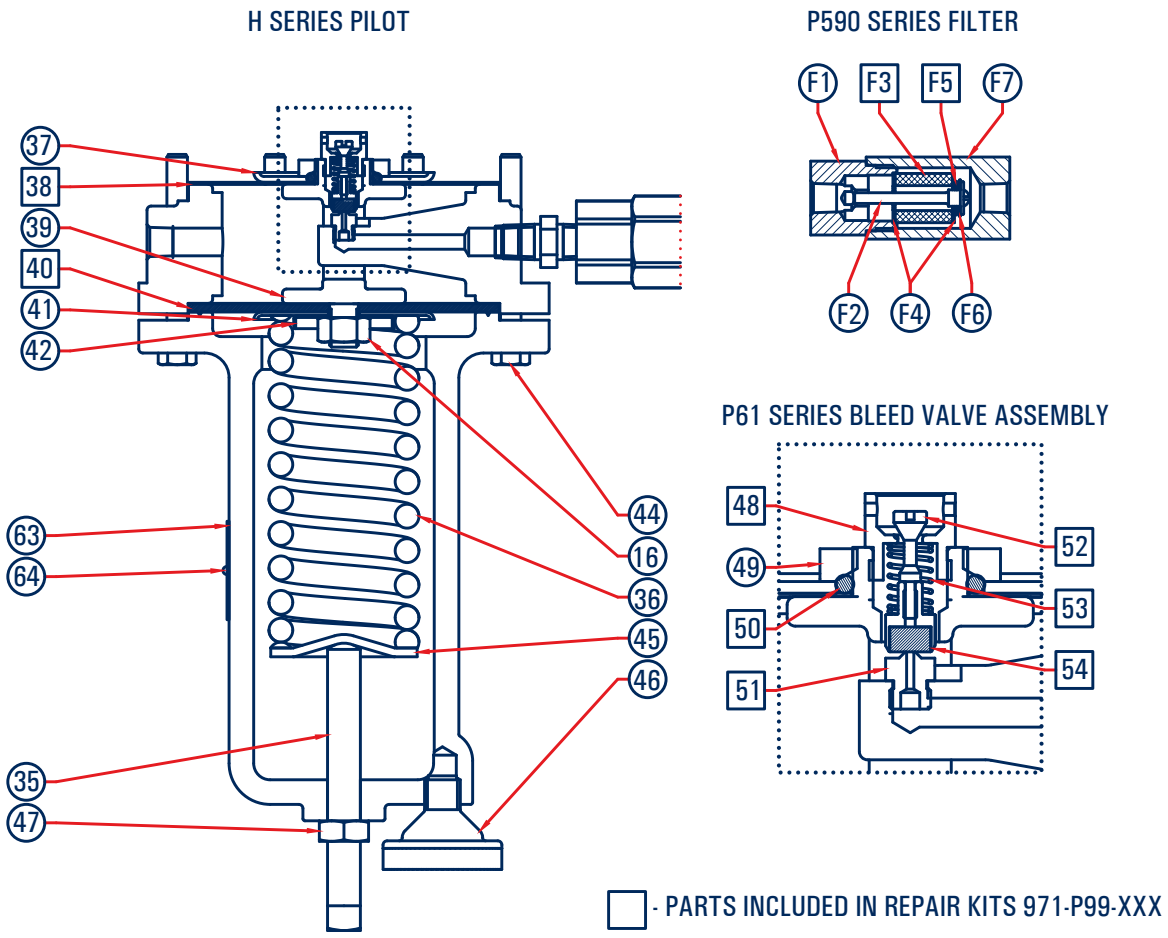

Item	Description	Qty.	Part Number
32	H Spring Case	1	604-263-000
35	H Adjustment Screw	1	648-462-000
36	10-65 psi Control Spring - Green stripe	1	655-659-003
37	H Diaphragm Head	1	638-077-000
38	Upper Relay Diaphragm	1	618-098-000
39	Relay Yoke Assembly	1	670-035-000
40	H Lower Relay Diaphragm - Nitrile	1	618-100-000
41	H Lower Relay Diaphragm Head	1	638-078-000
42	H Spring Seat	1	650-173-000
44	Cap Screw	8	648-467-004
45	Spring Seat H Only	1	626-077-000

Item	Description	Qty.	Part Number
46	H Vent Assembly	1	836-008-000
48	Bleed Orifice - Stainless	1	688-056-000
49	Diaphragm Nut - Brass	1	634-200-001
	Diaphragm Nut - Stainless	1	634-200-000
50	O-ring Seal - Nitrile	1	649-309-002
51	Relay Orifice - 25 PSIG Drop	1	688-055-001
	Relay Orifice - > 25 PSIG Drop	1	688-055-000
52	H Bleed Valve	1	636-058-001
53	H Bleed Valve Spring	1	655-734-001
54	Relay Disk Assembly - Nitrile	1	822-042-002

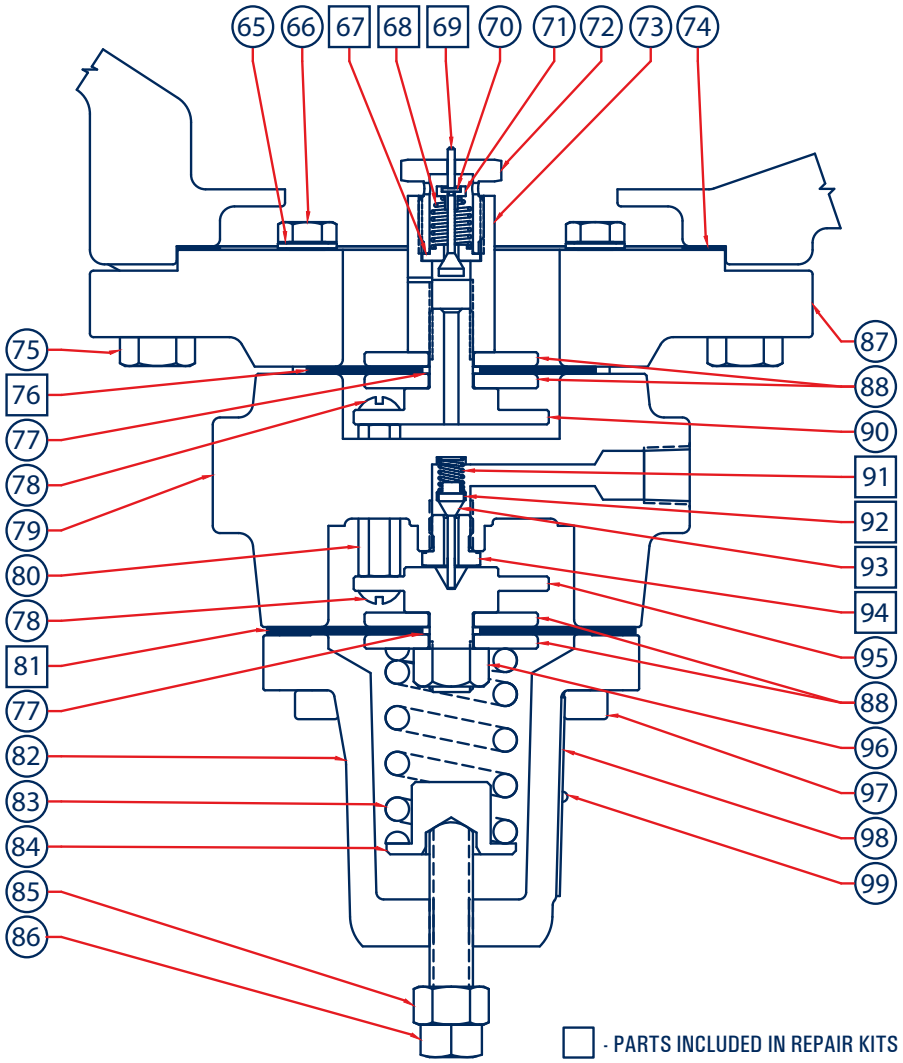

Item	Description	Qty.	Part Number
65	Seal Washer	2	662-239-000
66	Build Screw	2	648-567-000
67	Bleed Valve Orifice	1	688-065-000U
68	Bleed Valve Spring	1	655-734-013
69	Bleed Valve	1	636-060-000
70	Spring Seat Washer	1	693-032-000
71	Spring Seat	1	643-221-000
72	Relief Valve Cap	1	610-093-000
73	Relief Valve Body	1	664-574-000
74	Flange Adaptor Gasket	1	624-098-000
75	Build Screw	2	648-567-002
76	Upper Diaphragm	1	618-106-000
77	Diaphragm Insert	2	624-097-000
78	Slotted Round Screw	2	648-568-000
79	Pilot Body	1	664-573-000
80	Yoke Standoff	1	654-193-000
81	Lower Diaphragm	1	618-107-000

Item	Description	Qty.	Part Number
82	Pilot Bonnet	1	604-563-000
83	Main Spring 35-100	1	655-734-012
84	Main Spring Seat	1	650-191-000
85	Jam Nut	1	634-475-000
86	Adjustment Screw	1	648-566-000
87	Pilot Flange Adaptor	1	623-047-000
88	Diaphragm Plate	4	638-085-000
90	Upper Yoke Cap	1	610-092-001
91	Pintle Spring	1	655-734-014
92	Pintle Spring Seat	1	650-190-000
93	Molded Pintle Assy	1	813-054-000
94	Pilot Orifice	1	688-064-000
95	Lower Yoke Cap	1	610-092-000
96	Diaphragm Nut	1	634-476-000
97	Build Screw	2	648-567-001
98	Nameplate	1	632-570-000
Not Shown	Pilot Tube Adaptor	1	622-072-001
	Loading Tubing	1	660-117-000
	Pilot Tubing	1	660-117-001

P95H Regulator

- Large Capacity
- Working Media Including Air, Steam and Liquids
- All Vents are Tapped

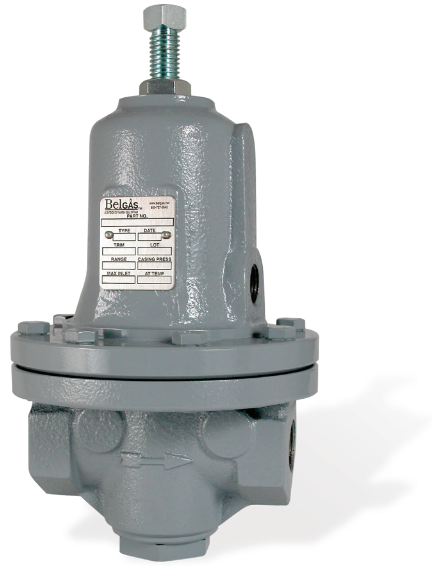

The P95H is a direct operating pressure reducing regulator with large capacity. Ideally suited for uses in oil and gas, process gases, steam and liquids. Available in four spring ranges and metal or elastomer diaphragm and orifice seat materials.

Applications

- Steam Injection
- In-line Gas and Liquid Control
- Chemical Boilers, Process Heaters

P95H _ _ 0 _ _ _ _

Code	Selection		
	Body Size		
04	1/2 NPT		
06	3/4 NPT		
08	1 NPT		
	Spring Range		
	PSIG	BAR	
015	5 - 15	0.34 - 1.03	
030	15 - 30	1 - 2.1	
075	25 - 75	1.7 - 5.2	
150	70 - 150	9 - 10.3	
	Options		
0	Standard		
A	150 RF*		* Steel and Stainless Steel Bodies
B	300 RF*		
C	600 RF*		
D	Socket Weld*		
0			
	Versions		
0	Standard		
N	NACE		
	Valve Plug / Orifice Material		
A	416 SS (Metal / Metal)		
B	416 SS / Fluorocarbon		
C	416 SS / Neoprene		
G	Brass / Neoprene		
F	Brass / Fluorocarbon		
M	Monel (1/2" Only)		
I	316 SS (Metal to Metal)		
J	316 SS / Fluorocarbon		
K	316 SS / Neoprene		
	Diaphragm Material		
0	302 SS		
2	Fluorocarbon		
3	Neoprene		
4	Monel		
	Case / Body Material		
0	Iron / Iron		
1	Steel / Steel		
3	Iron / Steel		
4	Steel / Stainless		
5	Stainless / Stainless		

P95H Flow Coefficients

Body Size, Inches	Wide Open Coefficients (For Relief Sizing)			C_1	K_m
	C_V	C_G	C_S		
1/2	1.9	67	3.35	35	.71

P95H Maximum Pressures

Nominal Body Size, Inches (DN)	Body and Spring Case Materials	End Connections	Max Inlet Pressure		Max Outlet Pressure	
			PSIG	BAR	PSIG	BAR

Specifications

Materials of Construction

Body, Bonnet, Diaphragm Case	
Options	Cast Iron
	Steel
	Stainless Steel
Diaphragm	
Options	302SS Fluorocarbon
	Neoprene
	Monel
Supply Valve Shutoff	
Options	Metal to Metal
	Metal to Elastomer

Spring Range

P95H Dimension, Inches

Nominal Body Size, Inches	A	B	C	D
1/2	3.90	1.80	6.12	4.33
3/4, 1	5.13	2.2	9.1	6.22

1/2 NPT

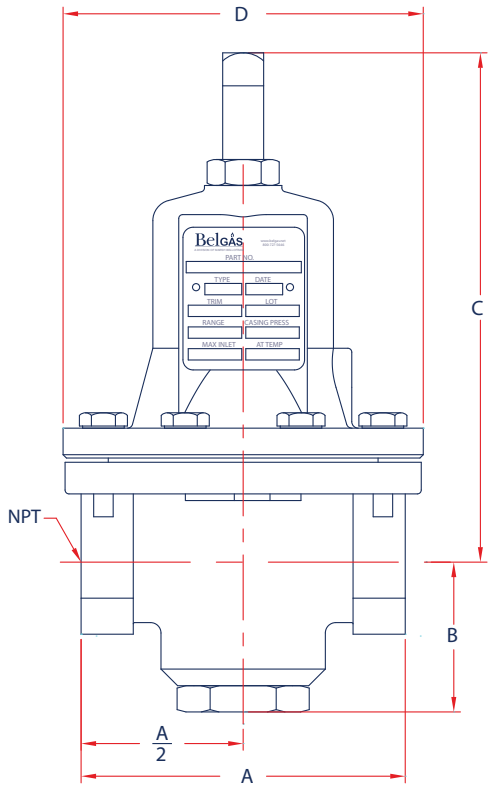

3/4 & 1 NPT

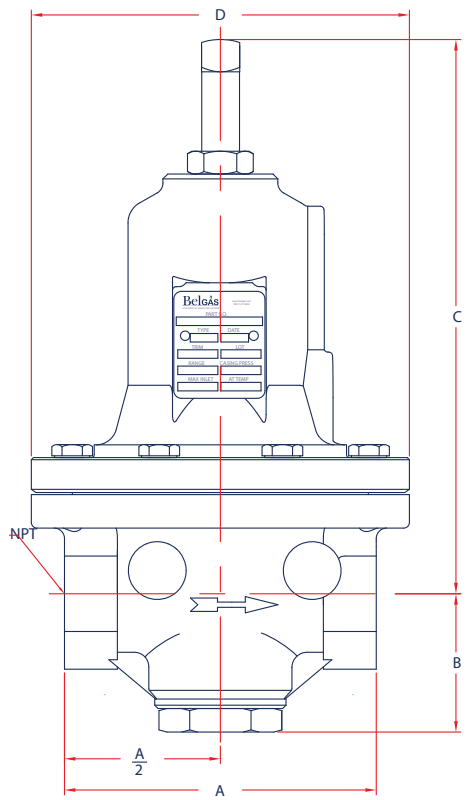

Flanged 3/4 & 1

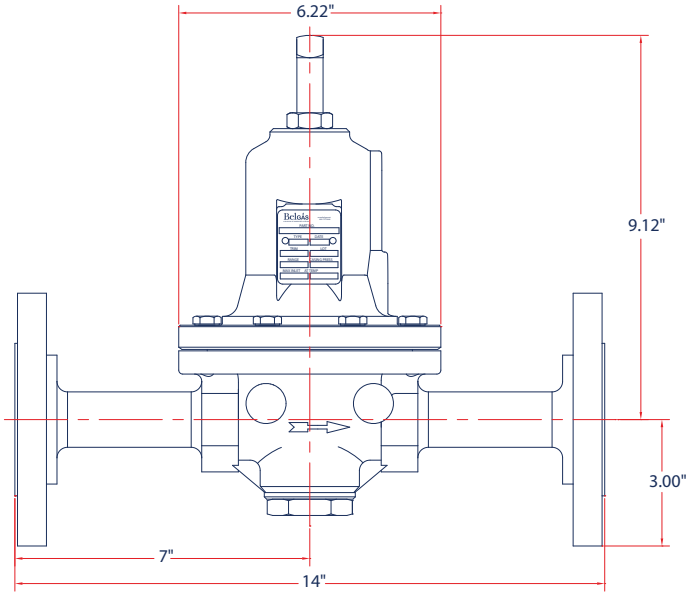

Flanged 1/2

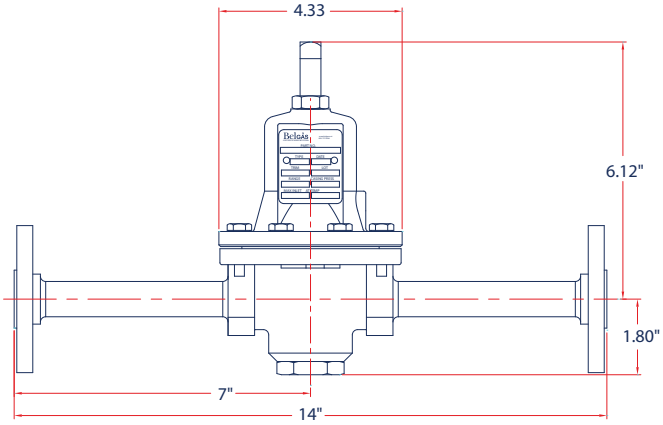

P95H Repair Kits - 1/2" Ported

	Kit Includes	Part Number
302SS Diaphragm	302SS Diaphragm (2), Diaphragm Gasket, Brass Orifice, Brass/Neoprene Valve Plug, Valve Spring	971-P95-007
	302SS Diaphragm (2), Diaphragm Gasket, Brass Orifice, Brass/FKM Valve Plug, Valve Spring	971-P95-106
	302SS Diaphragm (2), Diaphragm Gasket, 416SS Orifice, 416SS/Neoprene Valve Plug, Valve Spring	971-P95-100
	302SS Diaphragm (2), Diaphragm Gasket, 416SS Orifice, 416SS/M to M Valve Plug, Valve Spring	971-P95-101
	302SS Diaphragm (2), Diaphragm Gasket, 416SS Orifice, 416SS/FKM Valve Plug, Valve Spring	971-P95-104
	302SS Diaphragm (2), Diaphragm Gasket, 316SS Orifice, 316SS/M to M Valve Plug, Valve Spring	971-P95-109
	302SS Diaphragm (2), Diaphragm Gasket, 316SS Orifice, 316SS/Neoprene Valve Plug, Valve Spring	971-P95-111
	302SS Diaphragm (2), Diaphragm Gasket, 316SS Orifice, 316SS/FKM Valve Plug, Valve Spring	971-P95-110
	302SS Diaphragm (2), Diaphragm Gasket, 316SS Orifice, Monel Valve Plug, Valve Spring	971-P95-113
Neoprene Diaphragm	Neoprene Diaphragm, 416SS Orifice, 416SS/Neoprene Valve Plug, Valve Spring	971-P95-102
	Neoprene Diaphragm, 416SS Orifice, 416SS/FKM Valve Plug, Valve Spring	971-P95-127
	Neoprene Diaphragm, Brass Orifice, Brass/Neoprene Valve Plug, Valve Spring	971-P95-103
	Neoprene Diaphragm, Brass Orifice, Brass/FKM Valve Plug, Valve Spring	971-P95-129
	Neoprene Diaphragm, 416SS Orifice, 416SS/M to M Valve Plug, Valve Spring	971-P95-126
	Neoprene Diaphragm, 316SS Orifice, 316SS/M to M Valve Plug, Valve Spring	971-P95-131
	Neoprene Diaphragm, 316SS Orifice, 316SS/Neoprene Valve Plug, Valve Spring	971-P95-133
	Neoprene Diaphragm, 316SS Orifice, 316SS/FKM Valve Plug, Valve Spring	971-P95-132
	Neoprene Diaphragm, 316SS Orifice, Monel Valve Plug, Valve Spring	971-P95-135
	Neoprene Diaphragm, 316SS Orifice, 316SS/M to M Valve Plug, NACE Valve Spring	971-P95-153
	Neoprene Diaphragm, 316SS Orifice, 316SS/Neoprene Valve Plug, NACE Valve Spring	971-P95-155
	Neoprene Diaphragm, 316SS Orifice, 316SS/FKM Valve Plug, NACE Valve Spring	971-P95-154
	Neoprene Diaphragm, 316SS Orifice, Monel Valve Plug, NACE Valve Spring	971-P95-157
Monel Diaphragm	Monel Diaphragm (2), Diaphragm Gasket, 416SS Orifice, 416SS/M to M Valve Plug, Valve Spring	971-P95-136
	Monel Diaphragm (2), Diaphragm Gasket, 416SS Orifice, 416SS/Neoprene Valve Plug, Valve Spring	971-P95-138
	Monel Diaphragm (2), Diaphragm Gasket, 416SS Orifice, 416SS/FKM Valve Plug, Valve Spring	971-P95-137
	Monel Diaphragm (2), Diaphragm Gasket, Brass Orifice, Brass/Neoprene Valve Plug, Valve Spring	971-P95-141
	Monel Diaphragm (2), Diaphragm Gasket, Brass Orifice, Brass/FKM Valve Plug, Valve Spring	971-P95-140
	Monel Diaphragm (2), Diaphragm Gasket, 316SS Orifice, 316SS/M to M Valve Plug, Valve Spring	971-P95-143
	Monel Diaphragm (2), Diaphragm Gasket, 316SS Orifice, 316SS/Neoprene Valve Plug, Valve Spring	971-P95-145
	Monel Diaphragm (2), Diaphragm Gasket, 316SS Orifice, 316SS/FKM Valve Plug, Valve Spring	971-P95-144
	Monel Diaphragm (2), Diaphragm Gasket, 316SS Orifice, Monel Valve Plug, Valve Spring	971-P95-147
	Monel Diaphragm (2), Diaphragm Gasket, 316SS Orifice, 316SS/M to M Valve Plug, NACE Valve Spring	971-P95-158
	Monel Diaphragm (2), Diaphragm Gasket, 316SS Orifice, 316SS/Neoprene Valve Plug, NACE Valve Spring	971-P95-160
	Monel Diaphragm (2), Diaphragm Gasket, 316SS Orifice, 316SS/FKM Valve Plug, NACE Valve Spring	971-P95-159
	Monel Diaphragm (2), Diaphragm Gasket, 316SS Orifice, Monel Valve Plug, NACE Valve Spring,	971-P95-162
FKM Diaphragm	FKM Diaphragm (2), Diaphragm Gasket, 416SS Orifice, 416SS/M to M Valve Plug, Valve Spring	971-P95-114
	FKM Diaphragm (2), Diaphragm Gasket, 416SS Orifice, 416SS/Neoprene Valve Plug, Valve Spring	971-P95-116
	FKM Diaphragm (2), Diaphragm Gasket, 416SS Orifice, 416SS/FKM Valve Plug, Valve Spring	971-P95-115
	FKM Diaphragm (2), Diaphragm Gasket, Brass Orifice, Brass/Neoprene Valve Plug, Valve Spring	971-P95-119
	FKM Diaphragm (2), Diaphragm Gasket, Brass Orifice, Brass/FKM Valve Plug, Valve Spring	971-P95-118
	FKM Diaphragm (2), Diaphragm Gasket, 316SS Orifice, 316SS/M to M Valve Plug, Valve Spring	971-P95-121
	FKM Diaphragm (2), Diaphragm Gasket, 316SS Orifice, 316SS/Neoprene Valve Plug, Valve Spring	971-P95-123
	FKM Diaphragm (2), Diaphragm Gasket, 316SS Orifice, 316SS/FKM Valve Plug, Valve Spring	971-P95-122
	FKM Diaphragm (2), Diaphragm Gasket, 316SS Orifice, Monel Valve Plug, Valve Spring	971-P95-125
	FKM Diaphragm (2), Diaphragm Gasket, 316SS Orifice, 316SS/M to M Valve Plug, NACE Valve Spring	971-P95-148
	FKM Diaphragm (2), Diaphragm Gasket, 316SS Orifice, 316SS/Neoprene Valve Plug, NACE Valve Spring	971-P95-150
	FKM Diaphragm (2), Diaphragm Gasket, 316SS Orifice, 316SS/FKM Valve Plug, NACE Valve Spring	971-P95-149
	FKM Diaphragm (2), Diaphragm Gasket, 316SS Orifice, Monel Valve Plug, NACE Valve Spring	971-P95-152

P95H Repair Kits - 3/4" & 1" Ported

	Kit Includes	Part Number
302SS Diaphragm	302SS Diaphragm (2), Diaphragm Gasket, 416SS Orifice, 416SS/Neoprene Valve Plug, Valve Spring	971-P95-000
	302SS Diaphragm (2), Diaphragm Gasket, 416SS Orifice, 416SS/FKM Valve Plug, Valve Spring	971-P95-004
	302SS Diaphragm (2), Diaphragm Gasket, 416SS Orifice, 416SS/M to M Valve Plug, Valve Spring	971-P95-001
	302SS Diaphragm (2), Diaphragm Gasket, 316SS Orifice, 316SS/M to M Valve Plug, Valve Spring	971-P95-009
	302SS Diaphragm (2), Diaphragm Gasket, 316SS Orifice, 316SS/Neoprene Valve Plug, Valve Spring	971-P95-011
	02SS Diaphragm (2), Diaphragm Gasket, 316SS Orifice, 316SS/FKM Valve Plug, Valve Spring	971-P95-010
	302SS Diaphragm (2), Diaphragm Gasket, Brass Orifice, Brass/Neoprene Valve Plug, Valve Spring	971-P95-107
	302SS Diaphragm (2), Diaphragm Gasket, Brass Orifice, Brass/FKM Valve Plug, Valve Spring	971-P95-006
Neoprene Diaphragm	Neoprene Diaphragm, 416SS Orifice, 416SS/Neoprene Valve Plug, Valve Spring	971-P95-002
	Neoprene Diaphragm, 416SS Orifice, 416SS/FKM Valve Plug, Valve Spring	971-P95-025
	Neoprene Diaphragm, Brass Orifice, Neoprene Valve Plug, Valve Spring	971-P95-003
	Neoprene Diaphragm, 416SS Orifice, 416SS/M to M Valve Plug, Valve Spring	971-P95-024
	Neoprene Diaphragm, 316SS Orifice, 316SS/M to M Valve Plug, Valve Spring	971-P95-029
	Neoprene Diaphragm, 316SS Orifice, 316SS/Neoprene Valve Plug, Valve Spring	971-P95-031
	Neoprene Diaphragm, 316SS Orifice, 316SS/M to M Valve Plug, NACE Valve Spring	971-P95-048
	Neoprene Diaphragm, 316SS Orifice, 316SS/FKM Valve Plug, NACE Valve Spring	971-P95-049
	Neoprene Diaphragm, 316SS Orifice, 316SS/Neoprene Valve Plug, NACE Valve Spring	971-P95-050
Monel Diaphragm	Monel Diaphragm (2), Diaphragm Gasket, 416SS Orifice, 416SS/M to M Valve Plug, Valve Spring	971-P95-033
	Monel Diaphragm (2), Diaphragm Gasket, 416SS Orifice, 416SS/FKM Valve Plug, Valve Spring	971-P95-034
	Monel Diaphragm (2), Diaphragm Gasket, 416SS Orifice, 416SS/Neoprene Valve Plug, Valve Spring	971-P95-035
	Monel Diaphragm (2), Diaphragm Gasket, Brass Orifice, Brass/Neoprene Valve Plug, Valve Spring	971-P95-038
	Monel Diaphragm (2), Diaphragm Gasket, Brass Orifice, Brass/FKM Valve Plug, Valve Spring	971-P95-037
	Monel Diaphragm (2), Diaphragm Gasket, Brass Orifice, Brass/FKM Valve Plug, Valve Spring	971-P95-030
	Monel Diaphragm (2), Diaphragm Gasket, 316SS Orifice, 316SS/M to M Valve Plug, Valve Spring	971-P95-040
	Monel Diaphragm (2), Diaphragm Gasket, 316SS Orifice, 316SS/Neoprene Valve Plug, Valve Spring	971-P95-042
	Monel Diaphragm (2), Diaphragm Gasket, 316SS Orifice, 316SS/FKM Valve Plug, Valve Spring	971-P95-041
	Monel Diaphragm (2), Diaphragm Gasket, 316SS Orifice, 316SS/FKM Valve Plug, Valve Spring	971-P95-030
	Monel Diaphragm (2), Diaphragm Gasket, 316SS Orifice, 316SS/M to M Valve Plug, NACE Valve Spring	971-P95-052
	Monel Diaphragm (2), Diaphragm Gasket, 316SS Orifice, 316SS/FKM Valve Plug, NACE Valve Spring	971-P95-053
	Monel Diaphragm (2), Diaphragm Gasket, 316SS Orifice, 316SS/Neoprene Valve Plug, NACE Valve Spring	971-P95-054

P95H Steam Capacities[1] with Metal Diaphragm

Outlet Pressure Range	Outlet Pressure Setting		Inlet Pressure		1/2" Body Size Offset		3/4" Body Size Offset		1" Body Size Offset	
	PSIG	BAR	PSIG	BAR	10%	20%	10%	20%	10%	20%
5 to 15 PSIG (0.35 to 1.0 BAR)	10	0.69	20	1.4	30	44	68	100	80	120
			30	2.1	36	48	84	170	100	200
			50	3.5	40	56	110	210	130	250
			75	5.2	40	56	190	340	220	400
			100	6.9	40	56	260	370	300	440
			150	10.3	40	56	310	480	360	560
			200	13.8	40	56	340	520	400	600
			250	17.2	40	56	340	520	400	600
	15	1.0	20	1.4	32	48	76	110	88	130
			30	2.1	44	60	130	180	150	210
			50	3.5	52	64	200	290	240	340
			75	5.2	56	68	270	370	320	440
			100	6.9	56	72	340	520	400	600
			150	10.3	56	72	440	600	520	720
			200	13.8	56	72	440	600	520	720
			250	17.2	56	72	440	600	520	720

Outlet Pressure Range	Outlet Pressure Setting		Inlet Pressure		1/2" Body Size Offset			3/4" Body Size Offset			1" Body Size Offset		
	PSIG	BAR	PSIG	BAR	10%	20%	40%	10%	20%	40%	10%	20%	40%
15 to 30 PSIG (1.0 to 2.1 BAR)	15	1.0	30	2.1	27	42	66	66	93	150	66	99	160
			40	2.8	27	45	69	81	110	190	78	130	200
			50	3.5	27	45	66	87	130	200	100	160	250
			75	5.2	36	54	81	110	170	250	140	210	330
			100	6.9	42	63	87	120	180	270	160	240	360
			150	10.3	54	72	96	150	210	300	210	300	450
			200	13.8	66	84	110	180	240	330	260	360	480
			250	17.2	63	93	120	200	260	330	260	360	510
			300	20.7	81	99	130	220	290	360	300	420	540
	30	2.1	40	2.8	45	69	110	87	140	190	96	160	200
			50	3.5	39	63	100	120	180	230	120	200	250
			75	5.2	54	84	130	170	260	360	160	280	360
			100	6.9	60	90	130	190	290	420	220	330	480
			150	10.3	72	110	160	230	360	480	300	450	660
			200	13.8	93	130	170	280	360	510	360	540	780
			250	17.2	110	140	190	270	390	540	420	600	810
			300	20.7	120	150	200	300	420	570	450	630	840
25 to 75 PSIG (1.7 to 5.2 BAR)	50	3.4	60	4.1	36	60	110	120	200	270	130	220	280
			75	5.2	42	69	120	180	260	360	190	290	360
			100	6.9	63	87	150	220	330	450	210	390	480
			150	10.3	75	110	170	250	390	630	480	540	720
			200	13.8	93	140	200	330	510	720	450	720	930
			250	17.2	93	140	210	350	540	750	510	780	1100
			300	20.7	110	150	220	360	540	780	570	810	1100
	75	5.2	100	6.9	69	110	190	240	360	450	260	390	450
			125	8.6	78	130	220	330	480	570	390	510	600
			150	10.3	96	140	230	360	540	660	390	630	750
			200	13.8	110	170	260	420	630	720	510	840	960
			250	17.2	120	180	290	480	720	780	660	990	1100
			300	20.7	140	210	300	480	750	840	690	1100	1400
70 to 150 PSIG (4.8 to 10.3 BAR)	100	6.9	125	8.6	100	170	260	260	420	540	330	480	570
			150	10.3	120	200	330	360	540	660	420	600	690
			175	12.0	140	230	360	390	630	780	480	750	840
			200	13.8	160	250	390	450	690	900	480	810	960
			250	17.2	130	270	420	450	750	1100	630	1000	1200
			300	20.7	240	330	450	570	870	1200	780	1100	1400
	125	8.6	150	10.3	160	250	330	360	540	630	390	600	690
			175	12.0	150	270	390	390	630	750	450	690	810
			200	13.8	170	280	420	480	750	870	510	840	930
			225	15.5	200	330	480	510	840	990	570	900	1100
			250	17.2	210	390	510	540	870	1100	600	1000	1200
			300	20.7	210	390	570	630	960	1400	780	1200	1400
	150	10.3	175	12.0	170	290	360	420	600	870	480	660	780
			200	13.8	200	330	420	480	720	870	600	780	900
			225	15.5	210	360	480	600	870	990	660	900	1100
			250	17.2	270	420	540	600	900	1100	780	1100	1200
			300	20.7	260	450	600	690	1100	1400	930	1300	1400

1. Capacities are based in Pounds of saturated steam per hour.

P95H Pressure Ranges

Nominal Body Size, Inches	Outlet or Differential Pressure Range		Spring Wire Diameter		Spring Part Number	Spring Color
	PSIG	BAR	Inches	mm		
1/2	5 to 15	.3 to 1	.192	4.88	655-754-000	White
	15 to 30	1.0 to 2.1	.218	5.54	655-714-000	Yellow
	25 to 75	1.7 to 5.2	.235	5.97	655-690-000	Green
	70 to 150	4.8 to 10.3	.281	7.14	655-714-001	Red
3/4, 1	5 to 15	.3 to 1	.252	6.40	655-753-000	White
	15 to 30	1.0 to 2.1	.306	7.77	655-712-000	Yellow
	25 to 75	1.7 to 5.2	.343	8.71	655-712-001	Green
	70 to 150	4.8 to 10.3	.406	10.31	655-712-002	Red

P95H Air SCFH Capacities with Elastomer Diaphragm

Outlet Pressure Range	Outlet Pressure Setting		Inlet Pressure		1/2" Body Size Offset		3/4" Body Size Offset		1" Body Size Offset	
	PSIG	BAR	PSIG	BAR	10%	20%	10%	20%	10%	20%
5 to 15 PSIG (0.35 to 1.0 BAR)	10	0.69	20	1.4	750	1100	1700	2500	2000	3000
			30	2.1	900	1200	2100	4200	2500	5000
			50	3.5	1000	1400	2800	5300	3300	6300
			75	5.2	1000	1400	4700	8500	5500	10,000
			100	6.9	1000	1400	6400	9300	7500	11,000
			150	10.3	1000	1400	7700	12,000	9000	14,000
			200	13.8	1000	1400	8500	13,000	10,000	15,000
			250	17.2	1000	1400	8500	13,000	10,000	15,000
	15	1.0	20	1.4	800	1200	1900	2700	2200	3200
			30	2.1	1100	1500	3200	4500	3800	5300
			50	3.5	1300	1600	5100	7200	6000	8500
			75	5.2	1400	1650	6800	9300	8000	11,000
			100	6.9	1400	1800	8500	13,000	10,000	15,000
			150	10.3	1400	1800	11,000	15,000	13,000	18,000
			200	13.8	1400	1800	11,000	15,000	13,000	18,000
			250	17.2	1400	1800	11,000	15,000	13,000	18,000

Outlet Pressure Range	Outlet Pressure Setting		Inlet Pressure		1/2" Body Size Offset			3/4" Body Size Offset			1" Body Size Offset		
	PSIG	BAR	PSIG	BAR	10%	20%	40%	10%	20%	40%	10%	20%	40%
15 to 30 PSIG (1.0 to 2.1 BAR)	15	1.0	30	2.1	900	1400	2200	2200	3100	4900	2200	3300	5400
			40	2.8	900	1500	2300	2700	3800	6200	2600	4200	6500
			50	3.5	900	1500	2200	2900	4300	6800	3400	5400	8200
			75	5.2	1200	1800	2700	3800	5500	8400	4800	7000	11,000
			100	6.9	1400	2100	2900	4000	6000	9000	5400	8000	12,000
			150	10.3	1800	2400	3200	5000	7000	10,000	7000	10,000	15,000
			200	13.8	2200	2800	3600	6000	8000	11,000	8700	11,700	16,000
			250	17.2	2100	3100	3900	6800	8700	11,000	8500	12,000	17,000
			300	20.7	2700	3300	4300	7400	9600	12,000	10,000	14,000	18,000
	30	2.1	40	2.8	1500	2300	3500	2900	4500	6200	3200	5200	6600
			50	3.5	1300	2100	3400	4000	6000	7800	4000	6600	8300
			75	5.2	1800	2800	4200	5700	8500	12,000	5400	9300	12,000
			100	6.9	2000	3000	4400	6300	9800	14,000	7400	11,000	16,000
			150	10.3	2400	3800	5300	7700	12,000	16,000	10,000	15,000	22,000
			200	13.8	3100	4300	5800	9200	12,000	17,000	12,000	18,000	26,000
			250	17.2	3500	4600	6300	9000	13,000	18,000	14,000	20,000	27,000
			300	20.7	4000	4900	6600	10,000	14,000	19,000	15,000	21,000	28,000
25 to 75 PSIG (1.7 to 5.2 BAR)	50	3.4	60	4.1	1200	2000	3800	4000	6700	9000	4400	7200	9200
			75	5.2	1400	2300	3900	6000	8600	12,000	6300	9600	12,000
			100	6.9	2100	2900	5000	7400	11,000	15,000	7000	13,000	16,000
			150	10.3	2500	3700	5700	8300	13,000	21,000	16,000	18,000	24,000
			200	13.8	3100	4600	6500	11,000	17,000	24,000	15,000	24,000	31,000
			250	17.2	3100	4500	6900	12,000	18,000	25,000	17,000	26,000	36,000
			300	20.7	3500	5100	7300	12,000	18,000	26,000	19,000	27,000	38,000
	75	5.2	100	6.9	2300	3700	6200	8000	12,000	15,000	87000	13,000	15,000
			125	8.6	2600	4300	7300	11,000	16,000	19,000	13,000	17,000	20,000
			150	10.3	3200	4700	7700	12,000	18,000	22,000	13,000	21,000	25,000
			200	13.8	3700	5500	8500	14,000	21,000	24,000	17,000	28,000	32,000
			250	17.2	4000	6100	9500	16,000	24,000	25,000	22,000	33,000	38,000
			300	20.7	4700	7100	10,000	16,000	25,000	28,000	23,000	35,000	45,000
70 to 150 PSIG (4.8 to 10.3 BAR)	100	6.9	125	8.6	3400	5800	8800	8500	14,000	18,000	11,000	16,000	19,000
			150	10.3	4000	6800	11,000	12,000	18,000	22,000	14,000	20,000	23,000
			175	12.0	4800	7800	12,000	13,000	21,000	26,000	16,000	25,000	28,000
			200	13.8	5200	8200	13,000	15,000	23,000	30,000	16,000	27,000	32,000
			250	17.2	4300	8900	14,000	15,000	25,000	37,000	21,000	34,000	39,000
			300	20.7	8000	11,000	15,000	19,000	29,000	41,000	26,000	38,000	46,000
	125	8.6	150	10.3	5200	8200	11,000	12,000	18,000	21,000	13,000	20,000	23,000
			175	12.0	5000	9000	13,000	13,000	21,000	25,000	15,000	23,000	27,000
			200	13.8	5500	9300	14,000	16,000	25,000	29,000	17,000	28,000	31,000
			225	15.5	6800	11,000	16,000	17,000	28,000	33,000	19,000	30,000	35,000
			250	17.2	6900	13,000	17,000	18,000	29,000	37,000	20,000	34,000	39,000
			300	20.7	7000	13,000	19,000	21,000	32,000	45,000	26,000	41,000	46,000
	150	10.3	175	12.0	5600	9500	12,000	14,000	20,000	29,000	16,000	22,000	26,000
			200	13.8	6500	11,000	14,000	16,000	24,000	29,000	20,000	26,000	30,000
			225	15.5	7100	12,000	16,000	20,000	29,000	33,000	22,000	30,000	35,000
			250	17.2	9000	14,000	18,000	20,000	30,000	37,000	26,000	35,000	39,000
			300	20.7	8700	15,000	20,000	23,000	37,000	45,000	31,000	44,000	46,000

P95H Water Capacities with Elastomer Diaphragm[1]

Outlet Pressure Range	Outlet Pressure Setting		Inlet Pressure		1/2" Body Size		3/4" Body Size		1" Body Size	
					Offset		Offset		Offset	
	PSIG	BAR	PSIG	BAR	10%	20%	10%	20%	10%	20%
5 to 15 PSIG (0.35 to 1.0 BAR)	10	0.69	20	1.4	3.7	5.0	7.0	10	8.3	12
			30	2.1	4.0	5.2	10	13	12	16
			50	3.5	4.2	5.3	12	17	14	20
			75	5.2	4.2	5.3	12	20	14	25
			100	6.9	4.2	5.3	12	22	14	27
			150	10.3	4.2	5.3	12	22	14	27
			200	13.8	4.2	5.3	12	22	14	27
			250	17.2	4.2	5.3	12	22	14	27
	15	1.0	20	1.4	3.5	5.0	7.0	8.5	8.3	10
			30	2.1	4.7	5.8	11	13	13	15
			50	3.5	4.8	6.2	15	17	18	20
			75	5.2	5.0	6.3	15	22	18	27
			100	6.9	5.0	6.3	15	28	18	33
			150	10.3	5.0	6.3	15	32	18	37
			200	13.8	5.0	6.3	15	35	18	42
			250	17.2	5.0	6.3	15	35	20	42

Outlet Pressure Range	Outlet Pressure Setting		Inlet Pressure		1/2" Body Size			3/4" Body Size			1" Body Size		
					Offset			Offset			Offset		
	PSIG	BAR	PSIG	BAR	10%	20%	40%	10%	20%	40%	10%	20%	40%
15 to 30 PSIG (1.0 to 2.1 BAR)	15	1.0	30	2.1	2.0	3.2	6.8	7.0	10	15	8.0	11	16
			40	2.8	3.0	5.0	7.0	8.0	12	18	8.0	13	20
			50	3.5	4.0	5.5	7.2	9.0	14	20	8.5	15	23
			75	5.2	5.0	6.5	7.4	12	18	26	13	21	29
			100	6.9	5.0	6.5	7.6	13	19	28	19	26	34
			150	10.3	5.0	6.5	7.8	15	22	31	25	36	42
			200	13.8	5.1	6.5	8.0	19	25	35	32	37	44
			250	17.2	5.1	6.6	8.5	20	27	37	33	37	46
			300	20.7	5.2	6.6	9.0	20	28	40	34	38	48
	30	2.1	40	2.8	2.8	4.9	9.5	9.0	13	17	8.5	14	17
			50	3.5	3.5	5.7	10	11	16	21	11	18	22
			75	5.2	4.0	5.9	13	15	21	28	16	25	29
			100	6.9	5.0	6.1	14	17	24	33	19	31	34
			150	10.3	6.0	6.5	14	21	30	40	30	39	42
			200	13.8	6.5	6.9	14	24	31	46	35	48	49
			250	17.2	6.5	7.0	14	25	35	49	36	53	55
			300	20.7	7.0	7.5	14	26	36	53	37	54	60
25 to 75 PSIG (1.7 to 5.2 BAR)	50	3.4	60	4.1	4.0	6.5	12	9.0	14	20	12	17	23
			75	5.2	5.0	8.6	12	12	20	25	14	21	27
			100	6.9	5.5	9.0	13	15	24	31	16	26	34
			150	10.3	6.0	9.5	13	23	32	40	20	36	42
			200	13.8	6.5	10	14	24	34	47	30	42	49
			250	17.2	7.0	11	14	26	39	51	33	49	55
			300	20.7	7.3	11	15	25	40	55	40	55	60
	75	5.2	100	6.9	9.5	12	15	16	23	28	16	24	30
			125	8.6	10	14	18	20	29	33	21	31	36
			150	10.3	11	15	21	23	33	39	24	37	42
			200	13.8	11	15	23	28	41	47	29	46	49
			250	17.2	11	15	23	32	43	52	37	50	55
			300	20.7	11	15	23	33	49	56	39	56	60
70 to 150 PSIG (4.8 to 10.3 BAR)	100	6.9	125	8.6	7.0	11	16	15	24	30	30	24	32
			150	10.3	8.0	14	19	17	27	35	35	30	38
			175	12.0	9.0	15	21	24	28	40	40	33	43
			200	13.8	9.5	15	23	25	37	45	45	41	48
			250	17.2	10	16	24	29	42	52	52	42	54
			300	20.7	11	16	24	33	48	57	57	43	58
	125	8.6	125	8.7	7.8	12	18	19	25	32	17	27	35
			150	10.3	9.0	15	20	23	32	37	22	33	40
			175	12.0	9.5	16	23	27	36	42	24	25	47
			200	13.8	10	18	25	32	40	47	29	38	49
			250	17.2	11	18	26	34	44	51	32	42	53
			300	20.7	12	18	28	36	47	57	38	44	59
	150	10.3	175	12.0	8.7	14	19	21	28	34	34	26	37
			200	13.8	10	17	22	24	33	40	40	34	42
			225	15.5	12	19	24	29	37	45	45	39	48
			250	17.2	13	20	26	30	41	50	50	45	52
			300	20.7	13	20	28	35	49	55	55	53	59

1. Capacities are based in gallons per minute of water.

P95H Parts for 1/2" Body

		Description	Qty.	Part Number
1	Body	Cast Iron, 1/2"	1	664-333-000
		Steel, 1/2"		664-334-000
		Stainless Steel, 1/2"		664-335-000
2	Bonnet	Cast Iron, Tapped	1	604-251-000
		Steel, Tapped		604-250-000
		Stainless Steel, Tapped		604-252-000
3	Orifice	416 SS (Metal)	1	688-025-000
		Brass		688-031-000
		416 SS (Composite)		688-029-000
		316 SS (Metal)		688-026-000
		316 SS (Composite)		688-030-000
4	Valve Plug Seat, 416 SS (Metal)		1	650-151-000
	Valve Plug Assemblies	416 SS / Neoprene Seat		822-030-001
		Brass / Neoprene Seat		822-032-001
		416 SS / Fluorocarbon		822-030-000
		Brass / Fluorocarbon		822-032-000
		316 SS / Fluorocarbon		822-031-000
	Valve Plug Seat, 316 SS (Metal)			650-152-000
	Valve Plug Seat, Monel (Metal)			650-162-000
	Assembly - 316 SS / Neoprene Seat			822-031-001
5	Valve Plug Guide	416 SS (Metal)	1	639-109-000
		Brass		639-110-000
		316 SS (Metal)		639-111-000
6	Stem Assembly	416 SS	1	811-080-001
		316 SS		811-080-000
7	Stem Guide Bushing	416 SS	1	608-079-000
		316 SS		608-078-000
8	Valve Plug Spring	Stainless Steel		655-713-000
		Inconel		655-716-000
9	Range Springs	5-15 PSIG, White	1	655-754-000
		15-30 PSIG, Yellow		655-714-000
		25-75 PSIG, Green		655-690-000
		70-150 PSIG, Red		655-714-001
10	Diaphragm	Neoprene	1	618-087-000
		Fluorocarbon	1	618-088-000
		302 Stainless Steel	2	618-082-000
		Monel	2	618-081-000
11	Adjusting Screw, Steel		1	648-487-000
	Adjusting Screw, SS			648-487-001
12	Build Screws, Steel		8	648-463-009
	Build Screws, SS			648-547-001
13	Jam Nut, Steel		1	634-179-000
	Jam Nut, SS			634-185-000
14	Diaphragm Gasket, Composition		1	624-073-000
15	Spring Guide, Steel		1	626-079-000
16	NACE Tag (Not Shown)		1	632-503-000
17	P95H Nameplate (Not Shown)		1	632-524-000
18	Piston, Aluminum		1	637-323-000
19	Nameplate Drive Screws		2	648-464-000
21	Vent Screen		1	647-023-000
22	Diaphragm Protector		1	641-011-000

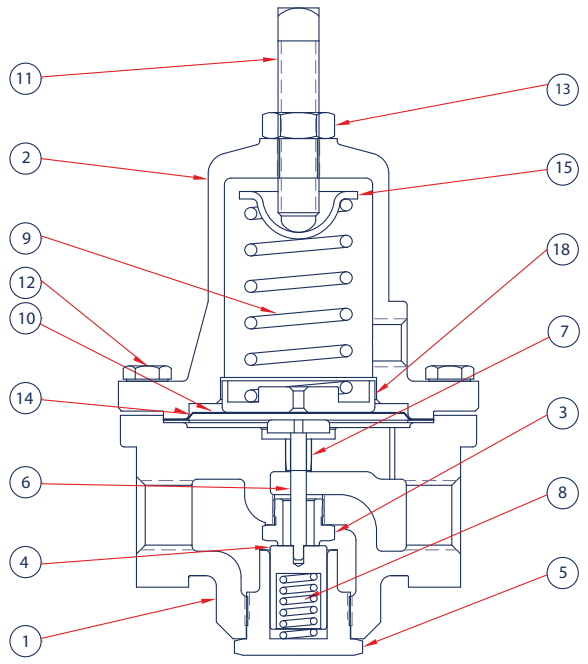

P95H Maximum Body & Bonnet Temp Range

Cast Iron	–40° to +406°F	–40° to +208°C
Steel	–20° to +450°F	–29° to +232°C
Stainless	–40° to +450°F	–40° to +232°C

P95H Maximum Diaphragm & Seat Temp Range

Nitrile	–40° to +180°F	–40° to +82°C
Neoprene	–40° to +180°F	–40° to +82°C
Stainless	–40° to +650°F	–40° to +343°C

P95H Parts for 3/4" & 1" Bodies

Item		Description		Part Number
1	Body	Cast Iron, 3/4"	1	664-329-000
		Cast Iron, 1"		664-329-001
		Steel, 3/4"		664-330-000
		Steel, 1"		664-330-001
		Stainless Steel, 3/4"		664-331-000
		Stainless Steel, 1"		664-331-001
2	Bonnet	Cast Iron, Tapped	1	604-244-000
		Steel, Tapped		604-243-000
		Stainless Steel Tapped		604-246-000
3	Orifice	416 SS (Metal / Metal)	1	688-020-000
		Brass		688-022-000
		416 SS (Composite)		688-023-000
		316 SS (Metal)		688-024-000
		316 SS (Composite)		688-021-000
4	Valve Plug Seat, 416 SS (Metal)		1	650-145-000
	Valve Plug Assemblies	416 SS / Neoprene Seat		822-026-001
		Brass / Neoprene Seat		822-028-001
		416 SS / Fluorocarbon		822-026-000
		Brass / Fluorocarbon		822-028-000
		316 SS / Fluorocarbon		822-027-000
	Valve Plug Seat, 316 SS (Metal)			650-149-000
	Assembly	316 SS / Neoprene Seat		822-027-001
5	Valve Plug Guide	416 SS (Metal)	1	639-106-000
		Brass		639-107-000
		316 SS (Metal)		639-108-000
6	Stem Assembly, 416 SS		1	811-079-001
	Stem Assembly, 316 SS			811-079-000
7	Stem Guide Bushing , 416 SS		1	608-077-000
	Stem Guide Bushing , 316 SS			608-076-000
8	Valve Plug Spring, Stainless Steel		1	655-710-000
	Valve Plug Spring, Inconel			655-711-000
9	Range Springs	5-15 PSIG, White	1	655-753-000
		15-30 PSIG, Yellow		655-712-000
		25-75 PSIG, Green		655-712-001
		70-150 PSIG, Red		655-712-002
10	Diaphragm	Neoprene	1	618-075-000
		Fluorocarbon	1	618-076-000
		302 Stainless Steel	2	618-077-000
		Monel	2	618-078-000
11	Adjusting Screw, Steel		1	648-519-000
	Adjusting Screw, SS			648-519-001
12	Build Screws, Steel		8	648-463-002
	Build Screws, SS			648-547-000
13	Jam Nut, Steel		1	634-181-000
	Jam Nut, SS			634-181-001
14	Diaphragm Gasket, Composition		1	624-072-000
15	Spring Guide, Steel		1	626-100-000
16	NACE Tag (Not Shown)		1	632-503-000
17	P95H Nameplate (Not Shown)		1	632-524-000
18	Piston, Aluminum		1	637-321-000
19	Nameplate Drive Screws (Not Shown)		2	648-464-000
20	Pitot Tube		1	660-064-000
21	Vent Screen		1	647-023-001
22	Diaphragm Protector		1	641-011-000

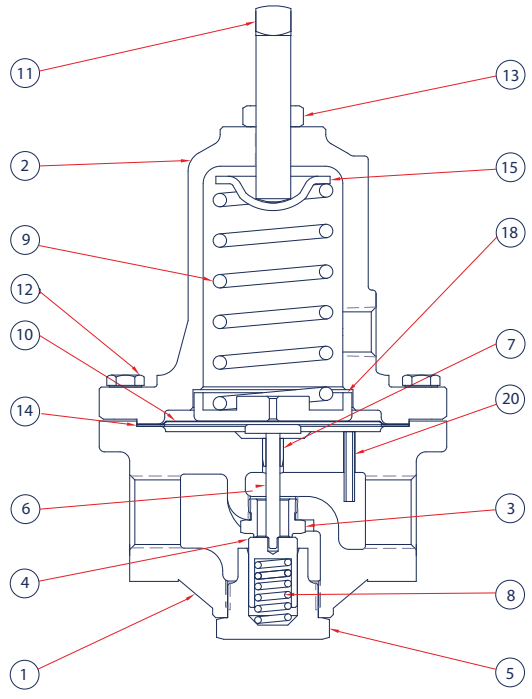

P95H Maximum Body & Bonnet Temp Range

Cast Iron	–40° to +406°F	–40° to +208°C
Steel	–20° to +450°F	–29° to +232°C

P95H Maximum Diaphragm & Seat Temp Range

Nitrile	–40° to +180°F	–40° to +82°C
Neoprene	–40° to +180°F	–40° to +82°C

P95H Regulator 1-1/2" & 2"

- Large Capacity
- Working Media Including Air, Steam and Liquids
- All Vents are Tapped

The P95H is a direct operating pressure reducing regulator with large capacity. Ideally suited for uses in oil and gas, process gases, steam and liquids. Available in four spring ranges and metal or elastomer diaphragm and orifice seat materials.

Applications

- Steam Injection
- In-line Gas and Liquid Control
- Chemical Boilers, Process Heaters

P95H				0	0				
									Body Size
	14								1-1/2 NPT
	16								2 NPT
									Spring Range
									PSIG / BAR
		080							5 - 80 / 0.34 - 5.5
		120							60 - 120 / 4.1 - 8.3
		140							100 - 140 / 6.9 - 9.6
		150							120 - 150 / 8.3 - 10.3
									Options
			0						Standard
			A						150 RF*
			B						300 RF*
			C						600 RF*
			D						Socket Weld*
				0	0				Place Holder
									Valve Plug / Orifice Material
						A			416 SS (Metal / Metal)
						G			Brass / Neoprene
						I			316 SS (Metal / Metal)
						K			316 SS / Neoprene
									Diaphragm Material
							0		302 SS
							3		Neoprene
									Case / Body Material
								0	Iron / Iron
								1	Steel / Steel
								3	Iron / Steel

* Steel Bodies Only

Specifications

Maximum Inlet		
	250 PSIG	Iron / NPT
	300 PSIG	Steel / ALL
Pressure Ranges	5–80 PSIG	
	60–120 PSIG	
	100–140 PSIG	
	120–150 PSIG	
Body Size	1-1/2 NPT	
	2 NPT	
Weight Approximate		
1-1/2" NPT	73 lb.	33.1 kg
2" NPT		

Materials of Construction

Body, Bonnet, Diaphragm Case	
Options	Cast Iron
	Steel
Diaphragm	
Options	302SS
	Neoprene
Supply Valve Shutoff	
Options	Metal to Metal
	Metal to Elastomer

P95H Flow Coefficients

Body Size, Inches	Wide Open Coefficients (For Relief Sizing)			C_1	K_m
	C_V	C_G	C_S		
1-1/2	12.5	475	23.75	38	0.83
2					

P95H Maximum Pressures

Nominal Body Size, Inches (DN)	Body and Spring Case Materials	End Connections	Max Inlet Pressure		Max Outlet Pressure	
			PSIG	BAR	PSIG	BAR
1-1/2 2	Cast Iron	NPT	250	17.2	150	10.3
	Steel	NPT	300	20.7	150	10.3
	Steel	150RF	300	19.7	150	10.3
	Steel	300RF	300	20.7	150	10.3
	Steel	600RF	300	41.2	150	10.3
	Steel	Socket Weld	300	20.7	150	10.3

P95H 1-1/2 NPT & 2 NPT

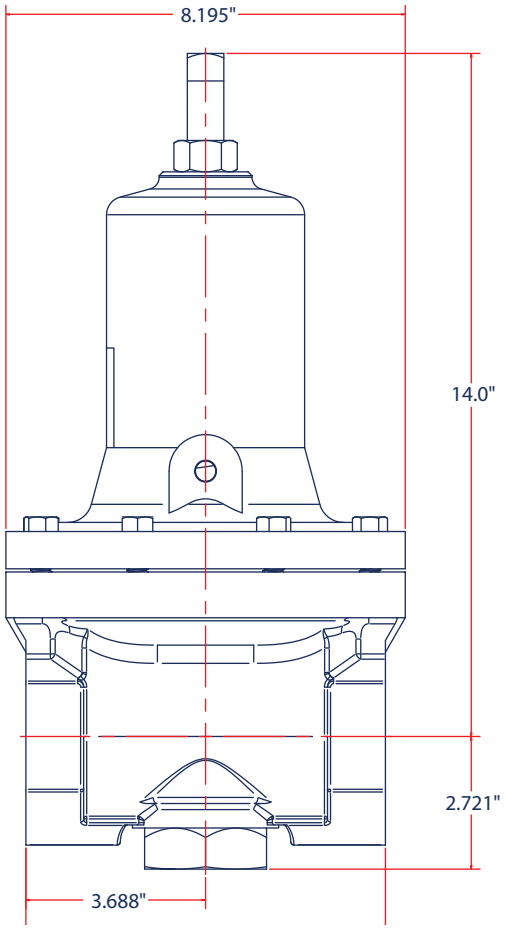

P95H Flanged 1-1/2 NPT & 2 NPT

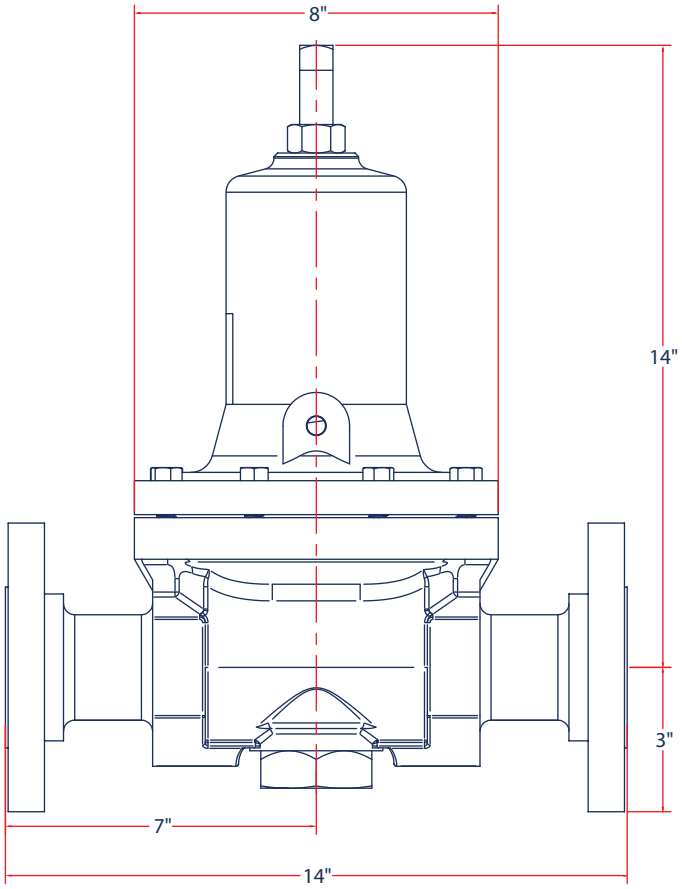

P95H Repair Kits - 1-1/2" & 2" Ported

	Kit Includes	Part Number
302SS Diaphragm	302SS Diaphragm (2), Diaphragm Gasket, 416SS Orifice, 416SS / Neoprene Valve Plug, Valve Spring	971-P95-500
	302SS Diaphragm (2), Diaphragm Gasket, 416SS Orifice, 416SS / M to M Valve Plug, Valve Spring	971-P95-501
	302SS Diaphragm (2), Diaphragm Gasket, 316SS Orifice, 316SS / M to M Valve Plug, Valve Spring	971-P95-509
	302SS Diaphragm (2), Diaphragm Gasket, 316SS Orifice, 316SS / Neoprene Valve Plug, Valve Spring	971-P95-511
	302SS Diaphragm (2), Diaphragm Gasket, Brass Orifice, Brass / Neoprene Valve Plug, Valve Spring	971-P95-507
	302SS Diaphragm (2), Diaphragm Gasket, 316SS Orifice, 316SS / PTFE Valve Plug, Valve Spring	971-P95-512
Neoprene Diaphragm	Neoprene Diaphragm, Brass Orifice, Neoprene Valve Plug, Valve Spring	971-P95-503
	Neoprene Diaphragm, 416SS Orifice, 416SS / M to M Valve Plug, Valve Spring	971-P95-524
	Neoprene Diaphragm, 316SS Orifice, 316SS / M to M Valve Plug, Valve Spring	971-P95-529
	Neoprene Diaphragm, 316SS Orifice, 316SS / Neoprene Valve Plug, Valve Spring	971-P95-531
	Neoprene Diaphragm, 316SS Orifice, 316SS / Neoprene Valve Plug, NACE Valve Spring	971-P95-550
	Neoprene Diaphragm, 316SS Orifice, 316SS / PTFE Valve Plug, Valve Spring	971-P95-532

P95H Air Capacities with an Elastomer or Stainless Steel Diaphragm

Outlet Pressure Range	Outlet Pressure Setting		Inlet Pressure		1-1/2" Body Size (DN40)						2" Body Size (DN50)					
					Offset						Offset					
					10%		20%		40%		10%		20%		40%	
	PSIG	BAR	PSIG	BAR	SCFH	Nm³/h	SCFH	Nm³/h	SCFH	Nm³/h	SCFH	Nm³/h	SCFH	Nm³/h	SCFH	Nm³/h
5 to 80 PSIG (0.35 to 5.5 BAR)	5	0.35	10	0.7	950	25.5	1000	26.8	1500	40.2	1000	26.8	1100	29.5	150	40.2
			20	1.4	2100	56.3	2500	67.0	4300	115.0	1800	48.2	2000	53.6	2600	69.7
			30	2.1	2500	67.0	3000	80.4	5000	134.0	3400	91.1	4600	123.0	7300	196.0
			50	3.5	3500	93.8	4000	107.0	6000	161.0	4000	107.0	5500	147.0	9000	241.0
			75	5.2	5000	134.0	6000	161.0	8000	214.0	5500	147.0	7000	188.0	11000	295.0
			100	6.9	6500	174.0	8000	214.0	9500	255.0	9000	241.0	12000	322.0	14000	375.0
			150	10.3	8500	228.0	11000	295.0	12000	322.0	15000	402.0	18000	482.0	21000	563.0
			200	13.8	12000	322.0	14000	375.0	17000	456.0	16000	429.0	19000	509.0	21000	563.0
			250	17.2	15000	402.0	17000	456.0	19000	509.0	18000	482.0	20000	536.0	22000	590.0
			300	20.7	18000	482.0	20000	536.0	21000	563.0	19000	509.0	21000	563.0	23000	616.0
	30	2.1	40	2.8	3400	91.1	6100	163.0	10000	268.0	4500	121.0	6200	166.0	11000	295.0
			50	3.5	4500	121.0	9000	241.0	14000	375.0	8000	214.0	10000	268.0	15000	402.0
			75	5.2	6000	161.0	12000	322.0	18000	482.0	15000	402.0	20000	536.0	25000	670.0
			100	6.9	8000	214.0	15000	402.0	23000	616.0	24000	643.0	30000	804.0	35000	938.0
			150	10.3	12000	322.0	21000	563.0	35000	938.0	44000	1179.0	50000	134.0	54000	1447.0
			200	13.8	20000	536.0	31000	831.0	38000	1018.0	48000	1286.0	55000	1474.0	58000	1554.0
			250	17.2	25000	670.0	35000	938.0	41000	1099.0	51000	1367.0	58000	1554.0	60000	1608.0
			300	20.7	29000	777.0	38000	1018.0	44000	1179.0	53000	1420.0	59000	1581.0	61000	1635.0
	50	3.4	60	4.1	6300	169.0	10000	268.0	20000	536.0	6500	174.0	11000	295.0	21000	563.0
			75	5.2	9000	241.0	14000	375.0	32000	858.0	12000	322.0	20000	536.0	35000	938.0
			100	6.9	10000	268.0	19000	509.0	45000	1206.0	20000	536.0	40000	1072.0	55000	1474.0
			150	10.3	13000	348.0	28000	750.0	61000	1635.0	30000	804.0	68000	1822.0	75000	2010.0
			200	13.8	21000	563.0	36000	965.0	64000	1715.0	43000	1152.0	75000	2010.0	83000	2224.0
			250	17.2	31000	831.0	45000	1206.0	66000	1769.0	55000	1474.0	80000	2144.0	86000	2305.0
			300	20.7	39000	1045.0	51000	1367.0	67000	1796.0	65000	1742.0	84000	2251.0	89000	2385.0
	75	5.2	100	6.9	14000	375.0	22000	590.0	42000	1126.0	15000	402.0	28000	750.0	50000	1340.0
			125	8.6	17000	456.0	30000	804.0	55000	1474.0	20000	536.0	45000	1206.0	65000	1742.0
			150	10.3	20000	536.0	39000	1045.0	71000	1903.0	26000	697.0	69000	1849.0	76000	2037.0
			200	13.8	23000	616.0	49000	1313.0	81000	2171.0	50000	1340.0	90000	2412.0	96000	2573.0
			250	17.2	33000	884.0	57000	1528.0	85000	2278.0	70000	1876.0	110000	2948.0	110000	2948.0
			300	20.7	43000	1152.0	65000	1742.0	88000	2358.0	90000	2412.0	120000	3216.0	120000	3216.0
60 to 120 PSIG (4.1 to 8.3 BAR)	100	6.9	125	8.6	11000	295.0	29000	777.0	50000	1340.0	12000	322.0	30000	804.0	54000	1447.0
			150	10.3	22000	590.0	37000	992.0	64000	1715.0	25000	670.0	45000	1206.0	71000	1903.0
			175	13.8	25000	670.0	47000	1260.0	75000	2010.0	33000	884.0	52000	1394.0	90000	2412.0
			225	15.5	28000	750.0	62000	1662.0	95000	2546.0	38000	1018.0	62000	1662.0	95000	2546.0
			250	17.2	33000	884.0	70000	1876.0	110000	2948.0	45000	1206.0	70000	1876.0	130000	3484.0
			300	20.7	40000	1072.0	88000	2358.0	120000	3216.0	55000	1474.0	80000	2144.0	150000	4020.0
100 to 140 PSIG (6.9 to 9.7 BAR)	125	8.6	150	10.3	21000	563.0	40000	1072.0	64000	1715.0	22000	590.0	40000	1072.0	65000	1742.0
			175	13.8	25000	670.0	47000	1260.0	74000	1983.0	32000	858.0	50000	1340.0	75000	2010.0
			200	13.8	28000	750.0	54000	1447.0	90000	2412.0	39000	1045.0	70000	1876.0	90000	2412.0
			225	15.5	30000	804.0	60000	1608.0	100000	2680.0	46000	1233.0	100000	2680.0	110000	2948.0
			250	17.2	35000	938.0	70000	1876.0	110000	2948.0	56000	1501.0	120000	3216.0	130000	3484.0
			300	20.7	42000	1126.0	85000	2276.0	130000	3484.0	86000	2305.0	150000	4020.0	150000	4020.0
120 to 150 PSIG (8.3 to 10.3 BAR)	150	10.3	175	13.8	19000	509.0	32000	858.0	54000	1447.0	20000	536.0	33000	884.0	55000	1474.0
			200	13.8	23000	616.0	44000	1179.0	79000	2117.0	24000	643.0	45000	1206.0	80000	2144.0
			225	15.5	29000	777.0	61000	1635.0	100000	2680.0	29000	777.0	61000	1635.0	100000	2680.0
			250	17.2	35000	938.0	70000	1876.0	120000	3216.0	49000	1313.0	96000	2573.0	120000	3216.0
			300	20.7	45000	1206.0	90000	2412.0	150000	4020.0	86000	2305.0	140000	3752.0	150000	4020.0

P95H Steam Capacities (saturated) with Stainless Steel Diaphragm

Outlet Pressure Range	Outlet Pressure Setting		Inlet Pressure		1-1/2" Body Size (DN40)						2" Body Size (DN50)					
					Offset						Offset					
					10%		20%		40%		10%		20%		40%	
	PSIG	BAR	PSIG	BAR	Pds/h	Kg/h	Pds/h	Kg/h	Pds/h	Kg/h	Pds/h	Kg/h	Pds/h	Kg/h	Pds/h	Kg/h
5 to 80 PSIG (0.35 to 5.5 BAR)	5	0.35	10	0.7	48	22.0	50	23.0	75	34.0	50	23.0	55	25.0	75	34.0
			20	1.4	110	50.0	130	59.0	220	100.0	90	41.0	100	46.0	130	59.0
			30	2.1	130	59.0	150	68.0	250	113.0	170	77.0	230	104.0	370	168.0
			50	3.5	180	82.0	200	91.0	300	136.0	200	91.0	280	127.0	450	204.0
			75	5.2	250	113.0	300	136.0	400	181.0	280	127.0	350	159.0	550	249.0
			100	6.9	330	150.0	400	181.0	480	218.0	450	204.0	600	272.0	700	318.0
			150	10.3	430	195.0	550	249.0	600	272.0	750	340.0	900	408.0	1100	499.0
			200	13.8	600	272.0	700	318.0	850	386.0	800	363.0	950	431.0	1100	499.0
			250	17.2	750	340.0	850	386.0	950	431.0	900	408.0	1000	454.0	1100	499.0
			300	20.7	900	408.0	1000	454.0	1100	499.0	950	431.0	1100	499.0	1200	544.0
	15	1.0	30	2.1	130	59.0	150	68.0	250	113.0	140	64.0	200	91.0	280	127.0
			40	2.8	180	82.0	230	104.0	400	181.0	190	87.0	280	127.0	400	181.0
			50	3.5	230	104.0	300	136.0	480	218.0	240	109.0	350	159.0	600	272.0
			75	5.2	300	136.0	400	181.0	650	295.0	350	159.0	540	245.0	1100	499.0
			100	6.9	380	172.0	480	218.0	800	363.0	500	227.0	750	340.0	1300	590.0
			150	10.3	500	227.0	610	277.0	1000	454.0	750	340.0	1000	454.0	1500	680.0
			200	13.8	750	340.0	950	431.0	1200	544.0	1000	454.0	1200	544.0	1600	726.0
			250	17.2	900	408.0	1100	499.0	1400	635.0	1200	544.0	1400	635.0	1700	771.0
			300	20.7	1100	499.0	1300	590.0	1500	680.0	1300	590.0	1500	680.0	1800	816.0
	30	2.1	40	2.8	170	77.0	300	136.0	500	227.0	230	104.0	310	141.0	550	249.0
			50	3.5	230	104.0	450	204.0	700	318.0	400	181.0	500	227.0	750	340.0
			75	5.2	300	136.0	600	272.0	900	408.0	750	340.0	1000	454.0	1300	590.0
			100	6.9	400	181.0	750	340.0	1200	544.0	1200	544.0	1500	680.0	1800	816.0
			150	10.3	600	272.0	1100	499.0	1800	816.0	2200	998.0	2500	1134.0	2700	1225.0
			200	13.8	1000	454.0	1600	726.0	1900	862.0	2400	1089.0	2800	1270.0	2900	1315.0
			250	17.2	1300	590.0	1800	816.0	2100	953.0	2600	1179.0	2900	1315.0	3000	1361.0
			300	20.7	1500	680.0	1900	862.0	2200	998.0	2700	1225.0	3000	1361.0	3100	1406.0
	50	3.4	60	4.1	300	136.0	550	249.0	1000	454.0	330	150.0	600	272.0	1100	499.0
			75	5.2	450	204.0	700	318.0	1600	726.0	600	272.0	1000	454.0	1800	816.0
			100	6.9	500	227.0	950	431.0	2300	1043.0	1000	454.0	2000	907.0	2800	1270.0
			150	10.3	640	290.0	1400	635.0	3100	1406.0	1500	680.0	3400	1542.0	3800	1724.0
			200	13.8	1100	499.0	1800	816.0	3200	1452.0	2200	998.0	3800	1724.0	4200	1905.0
			250	17.2	1600	726.0	230	1043.0	3300	1497.0	2800	1270.0	4000	1814.0	4300	1950.0
			300	20.7	2000	907.0	2600	1179.0	3400	1542.0	3300	1497.0	4200	1905.0	4500	2041.0
	75	5.2	100	6.9	700	318.0	1100	499.0	2100	952.0	750	340.0	1400	635.0	2500	1134.0
			125	8.6	850	386.0	1500	680.0	2800	1270.0	1000	454.0	2300	1043.0	3300	1497.0
			150	10.3	1000	454.0	2000	907.0	3600	1633.0	1300	590.0	3500	1588.0	3800	1724.0
			200	13.8	1200	544.0	2500	1134.0	4100	1860.0	2500	1134.0	4500	2041.0	4800	2177.0
			250	17.2	1700	771.0	2900	1315.0	4300	1950.0	3500	1588.0	5500	2495.0	5500	2495.0
			300	20.7	2200	998.0	3300	1497.0	4400	1996.0	4500	2041.0	6000	2722.0	6000	2722.0
60 to 120 PSIG (4.1 to 8.3 BAR)	100	6.9	125	8.6	550	249.0	1500	680.0	2500	1134.0	600	272.0	1500	680.0	2700	1225.0
			150	10.3	1100	499.0	1900	862.0	3200	1452.0	1300	590.0	2300	1043.0	3600	1633.0
			175	13.8	1300	590.0	2400	1089.0	3800	1724.0	1700	771.0	2600	1179.0	4500	2041.0
			225	15.5	1400	635.0	3100	1406.0	4800	2177.0	1400	635.0	3100	1406.0	4800	2177.0
			250	17.2	1700	771.0	3500	1588.0	5500	2495.0	2300	1043.0	3500	1588.0	6500	2948.0
			300	20.7	2000	907.0	4400	1996.0	6000	2722.0	2800	1270.0	4000	1814.0	7500	3402.0
100 to 140 PSIG (6.9 to 9.7 BAR)	125	8.6	150	10.3	1100	499.0	2000	907.0	3200	1452.0	1100	499.0	2000	907.0	3300	1497.0
			175	13.8	1300	590.0	2400	1089.0	3700	1678.0	1600	726.0	2500	1134.0	3800	1724.0
			200	13.8	1400	635.0	2700	1225.0	4500	2041.0	2000	907.0	3500	1588.0	4500	2041.0
			225	15.5	1500	680.0	3000	1361.0	5000	2268.0	2300	1043.0	5000	2268.0	5500	2495.0
			250	17.2	1800	816.0	3500	1588.0	5500	2495.0	2800	1270.0	6000	2722.0	6500	2948.0
			300	20.7	2100	953.0	4300	1950.0	6500	2948.0	4300	1950.0	7500	3402.0	7500	3402.0
120 to 150 PSIG (8.3 to 10.3 BAR)	150	10.3	175	13.8	950	431.0	1600	726.0	2700	1225.0	1000	4564.0	1700	771.0	2800	1270.0
			200	13.8	1200	544.0	2200	998.0	4000	1814.0	1200	544.0	2300	1043.0	4000	1814.0
			225	15.5	1500	680.0	3100	1406.0	5000	2268.0	1500	680.0	3100	1406.0	5000	2268.0
			250	17.2	1800	816.0	3500	1588.0	6000	2722.0	2500	1134.0	4800	2177.0	6000	2722.0
			300	20.7	2300	1043.0	4500	2041.0	7500	3402.0	4300	1950.0	7000	3175.0	7500	3402.0

P95H Water Capacities with an Elastomer or Stainless Steel Diaphragm

Outlet Pressure Range	Outlet Pressure Setting		Inlet Pressure		1-1/2" Body Size (DN40)						2" Body Size (DN50)					
					Offset						Offset					
					10%		20%		40%		10%		20%		40%	
	PSIG	BAR	PSIG	BAR	GPM	l/min	GPM	l/min	GPM	l/min	GPM	l/min	GPM	l/min	GPM	l/min
5 to 80 PSIG (0.35 to 5.5 BAR)	5	0.35	10	0.7	5	18.0	6	20.0	8	28.0	5	18.0	6	20.0	8	28.0
			20	1.4	6	24.0	7	27.0	9	34.0	6	24.0	7	27.0	10	38.0
			30	2.1	8	28.0	9	34.0	10	38.0	8	28.0	9	34.0	12	45.0
			50	3.5	9	34.0	10	37.0	12	45.0	10	37.0	12	45.0	15	57.0
			75	5.2	12	45.0	13	49.0	15	57.0	12	45.0	14	53.0	16	61.0
			100	6.9	14	53.0	15	57.0	17	64.0	14	53.0	15	57.0	18	68.0
			150	10.3	16	61.0	18	68.0	20	76.0	17	64.0	20	76.0	22	83.0
			200	13.8	18	68.0	20	76.0	23	87.0	18	68.0	21	79.0	23	87.0
			250	17.2	19	72.0	22	83.0	25	95.0	25	95.0	27	102.0	30	114.0
			300	20.7	20	76.0	24	91.0	28	106.0	33	125.0	40	151.0	45	170.0
	15	1.0	30	2.1	8	28.0	9	34.0	11	42.0	7	27.0	10	38.0	14	53.0
			40	2.8	10	38.0	11	42.0	14	53.0	10	38.0	13	49.0	17	64.0
			50	3.5	12	45.0	13	79.0	18	68.0	11	42.0	15	57.0	20	76.0
			75	5.2	14	53.0	18	68.0	25	95.0	15	57.0	19	72.0	26	98.0
			100	6.9	17	64.0	21	80.0	32	121.0	18	68.0	22	83.0	32	121.0
			150	10.3	21	80.0	27	102.0	43	163.0	21	80.0	28	106.0	40	151.0
			200	13.8	23	87.0	32	121.0	52	197.0	24	91.0	31	117.0	43	163.0
			250	17.2	24	91.0	34	129.0	54	204.0	27	102.0	40	151.0	50	189.0
			300	20.7	25	95.0	35	132.0	55	208.0	32	121.0	50	189.0	65	246.0
	30	2.1	40	2.8	13	49.0	18	68.0	27	102.0	13	49.0	18	68.0	27	102.0
			50	3.5	15	57.0	21	80.0	30	114.0	14	53.0	20	76.0	30	114.0
			75	5.2	18	68.0	26	98.0	40	151.0	18	68.0	25	95.0	39	148.0
			100	6.9	21	80.0	30	114.0	49	185.0	22	83.0	30	114.0	48	182.0
			150	10.3	24	91.0	36	136.0	64	242.0	26	98.0	36	136.0	63	238.0
			200	13.8	27	102.0	41	155.0	80	303.0	30	114.0	41	155.0	77	291.0
			250	17.2	30	114.0	47	178.0	110	416.0	31	117.0	45	170.0	90	341.0
			300	20.7	33	125.0	55	208.0	130	492.0	32	121.0	52	197.0	110	416.0
	50	3.4	60	4.1	17	64.0	29	110.0	51	193.0	16	61.0	29	110.0	51	193.0
			75	5.2	20	76.0	33	125.0	58	220.0	19	72.0	32	121.0	56	212.0
			100	6.9	25	95.0	40	151.0	68	257.0	24	91.0	38	144.0	65	246.0
			150	10.3	34	129.0	50	189.0	87	329.0	32	121.0	49	185.0	84	318.0
			200	13.8	42	159.0	61	231.0	110	416.0	42	159.0	62	235.0	110	416.0
			250	17.2	50	189.0	71	269.0	130	492.0	50	189.0	73	276.0	140	530.0
			300	20.7	56	212.0	82	310.0	160	606.0	55	208.0	83	314.0	160	606.0
	75	5.2	100	6.9	19	72.0	30	114.0	60	227.0	20	76.0	30	114.0	60	227.0
			125	8.6	31	117.0	56	212.0	85	322.0	27	102.0	49	185.0	85	322.0
			150	10.3	38	144.0	65	246.0	110	416.0	34	129.0	60	227.0	110	416.0
			200	13.8	52	197.0	74	280.0	120	454.0	45	170.0	71	269.0	120	454.0
			250	17.2	57	216.0	85	322.0	140	530.0	56	212.0	85	322.0	140	530.0
			300	20.7	65	246.0	95	360.0	160	606.0	68	257.0	100	378.0	160	606.0
60 to 120 PSIG (4.1 to 8.3 BAR)	100	6.9	125	8.6	23	87.0	30	114.0	75	284.0	24	91.0	32	121.0	76	288.0
			150	10.3	41	155.0	44	167.0	87	329.0	33	125.0	45	170.0	89	337.0
			175	13.8	40	151.0	55	208.0	100	378.0	41	155.0	57	216.0	110	416.0
			225	15.5	52	197.0	83	314.0	130	492.0	54	204.0	84	318.0	130	492.0
			250	17.2	62	235.0	96	363.0	140	530.0	65	246.0	100	378.0	140	530.0
			300	20.7	70	265.0	100	378.0	180	681.0	100	378.0	130	492.0	160	606.0
100 to 140 PSIG (6.9 to 9.7 BAR)	125	8.6	150	10.3	29	106.0	51	193.0	80	303.0	29	110.0	52	197.0	83	314.0
			175	13.8	29	110.0	60	227.0	90	341.0	31	117.0	61	231.0	95	360.0
			200	13.8	30	114.0	64	242.0	110	416.0	33	125.0	71	269.0	110	416.0
			225	15.5	36	136.0	70	265.0	110	416.0	36	136.0	82	310.0	120	454.0
			250	17.2	38	144.0	76	288.0	120	454.0	45	170.0	95	360.0	130	492.0
			300	20.7	39	148.0	82	310.0	140	530.0	69	261.0	120	454.0	150	568.0
120 to 150 PSIG (8.3 to 10.3 BAR)	150	10.3	175	13.8	29	110.0	52	197.0	90	341.0	33	125.0	54	204.0	92	348.0
			200	13.8	32	121.0	55	208.0	100	378.0	34	129.0	58	220.0	100	378.0
			225	15.5	35	132.0	63	238.0	110	416.0	37	140.0	64	242.0	110	416.0
			250	17.2	40	151.0	70	265.0	120	454.0	43	163.0	73	276.0	130	492.0
			300	20.7	55	208.0	94	356.0	140	530.0	55	208.0	95	360.0	150	568.0

P95H Parts for 1-1/2" & 2" Body

Item		Description	Qty.	Part Number
1	Body/Pi-tot Tube Assy.	Cast Iron, 1-1/2"	1	805-388-000
		Steel, 1-1/2"		805-388-002
		Cast Iron, 2"		805-388-001
		Steel, 2"		805-388-003
2	Bonnet	Cast Iron, Tapped	1	604-269-000
		Steel, Tapped		604-270-000
3	Seat	416 SS (Metal)	1	650-192-000
		Brass / Nitrile		822-058-001
		316 SS (Metal)		650-192-001
		316 SS / PTFE Seat		822-058-002
		316 SS / Neoprene Seat		822-058-000
4	Valve Plug Guide	Brass	1	639-143-002
		416 SS (Metal)		639-143-000
		316 SS (Metal)		639-143-001
5	Valve Spring	316 SS	1	655-769-000
		Inconel		655-769-001
6	Valve Base	416 SS	1	650-194-000
		316 SS		650-194-001
7	Stem	416 SS	1	651-105-000
		316 SS		651-105-001
8	Stem Bushing	416 SS	1	608-086-000
		316 SS		608-086-001
9	Packing Follower	416 SS	1	643-223-000
		316 SS		643-223-001
10	PTFE O-ring		1	649-338-000
11	Pusher Post	416 SS Elastomer	1	613-041-000
		416 SS Metal to Metal		613-042-000
		316 SS Elastomer		613-041-001
		316 SS Metal to Metal		613-042-001
12	Pusher Post Gasket (Metal Dia's Only)		2	624-099-000
13	Range Springs	5 - 80 PSIG, Light Blue	1	655-768-001
		60 - 120 PSIG, Light Gray		655-768-002
		120 - 150 PSIG, Black		655-768-003
		100 - 140 PSIG, Yellow		655-768-004
14	Orifice	416SS Metal to Metal		688-066-000
		316SS Metal to Metal		688-066-001
		416SS Composite		688-068-000
		316SS Composite		688-068-001
		Brass Composite		688-068-002
15	Dia-phragm	Diaphragm - 302SS	2	618-108-000
		Diaphragm - Neoprene	1	618-109-000
16	Diaphragm Gasket (Metal Dia's Only)		1	624-100-000
17	Stem Guide Spring		1	655-770-000
18	Lower Spring Seat		1	626-117-000
19	Upper Spring Seat		1	626-116-000
20	Piston	Steel	2	637-337-000
		316 Stainless Steel		637-337-001
21	Adjusting Screw, Steel,		1	648-569-000
22	Stem Lock Nut		1	634-212-000
23	Hex Cap Screw		8	648-467-009
24	Vent Screen		1	836-004-000
25	Hex Nut		1	634-213-000
26	Lock Washer		1	662-000-018
27	Name Plate (not shown)		1	632-524-000
28	Name Plate Drive Screws (not shown)		2	648-464-000

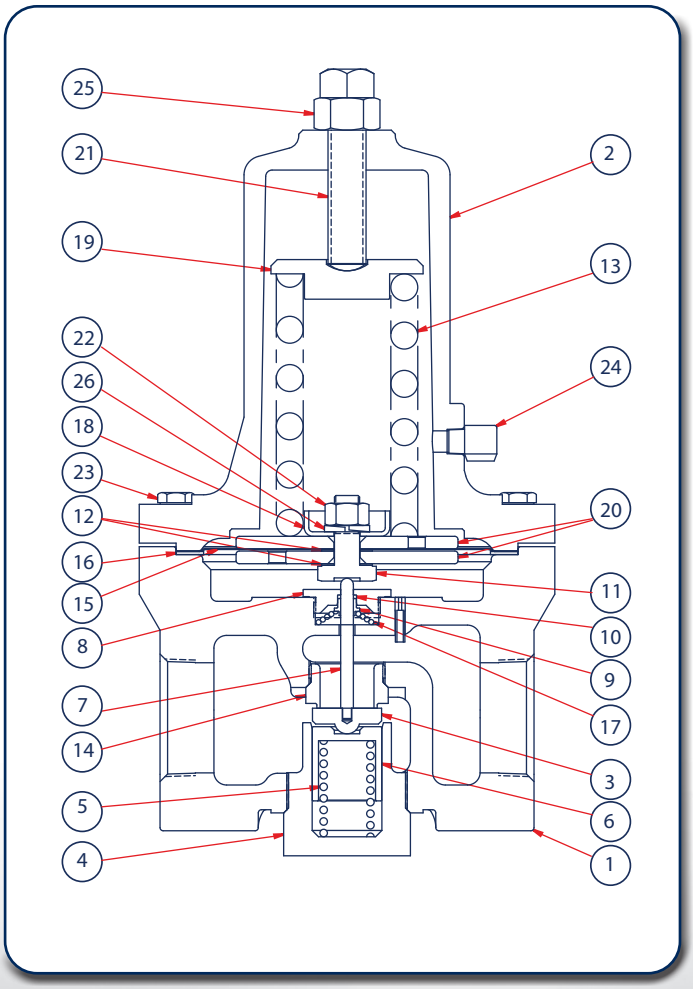

P95H Maximum Body & Bonnet Temp Range

Cast Iron	–40° to +406°F	–40° to +208°C
Steel	–20° to +450°F	–29° to +232°C

P95H Maximum Diaphragm & Seat Temp Range

Neoprene	–40° to +180°F	–40° to +82°C
Stainless	–40° to +650°F	–40° to +343°C

P98H Back Pressure Regulator / Relief Valve

The P98H monitors upstream pressure and opens to relieve excess pressure increases above setpoint. As a Back Pressure Regulator, the upstream pressure is monitored and released downstream when the setpoint is exceeded.

Applications

- Pulp and Paper - Boilers, Heaters, PM Drums
- Chemical Boilers, Process Heaters
- Water and Waste Water Systems
- Steam Injection

P98H Part Matrix

				0	0				
									Body Size
	06								3⁄4 NPT
	08								1 NPT
									Spring Range
									PSIG / BAR
									5 - 15 / 0.34 - 1.03
									15 - 35 / 1 - 2.4
									25 - 75 / 1.7 - 5.2
									70 - 140 / 4.8 - 9.7
									130 - 200 / 9 - 13.8
									Options
			0						Standard
			1						Tapped Vent
			A						150 RF*
			B						300 RF*
			C						600 RF*
			D						Socket Weld*
			W						Tapped Vent + 150RF*
			X						Tapped Vent + 300RF*
			Y						Tapped Vent + 600RF*
			Z						Tapped Vent + Socket Weld*
				0					
									Version
					0				Standard
					N				NACE
									Valve Plug / Orifice
						A			416 SS (Metal / Metal)
						B			416 SS Fluorocarbon
						E			416 SS / Nitrile
						I			316 SS (Metal / Metal)
						J			316 SS Fluorocarbon
						K			316 SS / Neoprene
									Diaphragm
							0		302 SS
							2		Fluorocarbon
							3		Neoprene
							4		Monel
									Case / Body Material
								0	Iron / Iron
								1	Steel / Steel
								3	Iron / Steel
								4	Steel / Stainless

*Steel and Stainless Steel Bodies

Specifications

Maximum Inlet Pressure (Set Pressure Plus Build Up)		
Body	300 PSIG	WCB Steel / SS
	250 PSIG @ 400°F	Cast Iron
	300 PSIG @ 300°F	Cast Iron
Pressure Ranges	5–15 PSIG	
	15–35 PSIG	
	25–75 PSIG	
	70–140 PSIG	
	130–200 PSIG	
Body Size	3⁄4 NPT	
	1 NPT	
Orifice Size	9/16"	
Weight Approximate		
3/4" NPT	20 lb	9.1 kg
1" NPT	20 lb	9.1 kg

Spring Range

P98H Maximum Body & Bonnet Temp Range

Cast Iron	–40° to +406°F	–40° to +208°C
Steel	–20° to +450°F	–29° to +232°C
Stainless	–40° to +450°F	–40° to +232°C

P98H Maximum Diaphragm & Seat Temp

Nitrile	–40° to +180°F	–40° to +82°C
Neoprene	–40° to +180°F	–40° to +82°C

Materials of Construction

Body, Bonnet, Diaphragm Case	
Options	Cast Iron
	Steel
	Stainless Steel
Diaphragm	
Options	302 SS Fluorocarbon
	Neoprene
	Monel
Valve Plug / Seat	

P98H Dimension, Inches

Nominal Body Size, Inches	A		B	C (Maximum)	D	E (NPT)
	NPT or SWE	Flanged				
3/4, 1	5.0	14.0	1.31	9.69	6.22	1/2*

* Tapped Vent Option Only

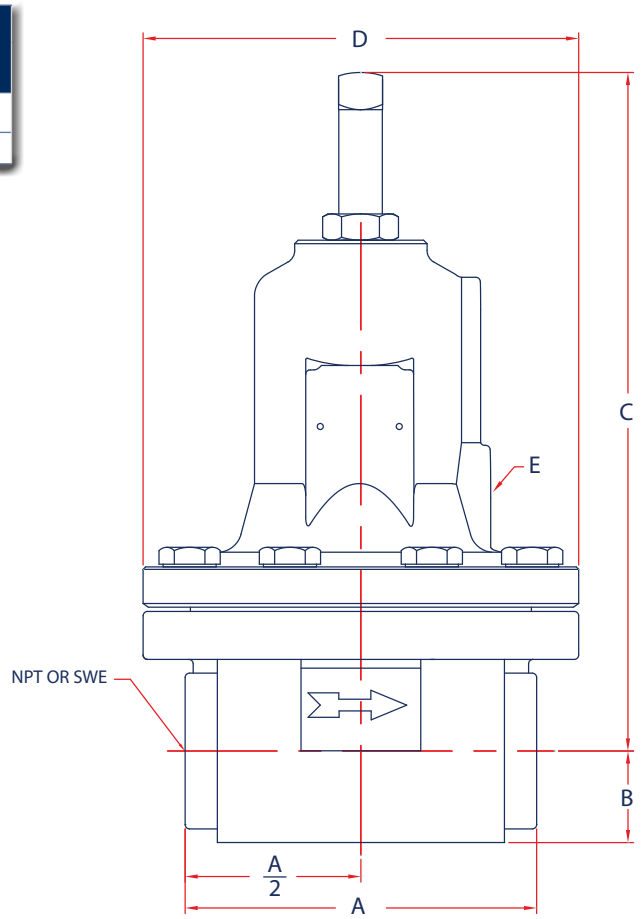

Installation

These relief valves may be installed in any position, as long as flow will be in the same direction as that of the arrow cast on the body.

P98H Parts

Item		Description	Qty.	Part Number
1	Body	Iron 3/4"	1	664-336-000
		Iron 1"		664-336-001
		Steel 3/4"		664-337-000
		Steel 1"		664-337-001
		Stainless Steel 3/4"		664-338-000
		Stainless Steel 1"		664-338-001
2	Bonnet	Steel (Drilled)	1	604-241-000
		Iron (Drilled)		604-242-000
		Stainless Steel, (Drilled)		604-245-000
		Steel, Tapped		604-243-000
		Iron, Tapped		604-244-000
		Stainless Steel, Tapped		604-246-000
3	Orifice	416 Stainless Steel / Metal to Metal	1	688-020-000
		416 Stainless Steel w/Elastomer		688-027-000
		316 Stainless Steel / Metal to Metal		688-024-000
		316 Stainless Steel w/Elastomer		688-028-000
4	Valve Plugs	416 Stainless Steel	1	639-112-000
		416 Stainless Steel / Metal to Metal		639-116-000
		316 Stainless Steel		639-117-000
		316 Stainless Steel / Metal to Metal		639-113-000
5	Pusher Post, 416 SS Elastomer		1	613-034-000
	Pusher Post, 416 SS Metal to Metal			613-036-000
	Pusher Post, 316 SS Elastomer			613-035-000
	Pusher Post, 316 SS Metal to Metal			613-037-000
6	Diaphragm Assembly Gasket		1	624-074-000
7	Range Springs	5-15 PSIG, White	1	655-753-000
		15-35 PSIG, Yellow		655-712-000
		25-75 PSIG, Green		655-712-001
		70-140 PSIG, Red		655-712-002
		130-200 PSIG, Blue		655-717-000
8	Diaphragm	Neoprene	1	618-083-000
		Fluorocarbon	2	618-084-000
		302 Stainless Steel	2	618-085-000
		Monel	2	618-086-000
9	O-ring - Nitrile		1	649-269-004
	O-ring - Fluorocarbon			010-380-000
	O-ring - Neoprene			649-312-000
10	Adjusting Screw - Steel		1	648-519-000
	Adjusting Screw - Stainless Steel			648-519-001
11	Diaphragm Flange Gasket		1	624-072-000
12	Spring Guide		1	626-100-000
13	Valve Plug Guide - 416 SS		1	626-103-000
	Valve Plug Guide - 316 SS			626-104-000
14	NACE Tag (Not Shown)		1	632-503-000
15	Nameplate (Not Shown)		1	632-524-000
16	Stem Jam Nut		1	634-181-000
	Stem Jam Nut - Stainless Steel			634-181-001
17	Diaphragm Assembly Locknut		1	634-184-000
18	Piston (Diaphragm Head)		1	637-324-000
19	Retainer, O-ring - 416 SS		1	643-199-000
	Retainer, O-ring - 316 SS			643-200-000
20	Build Screw - Steel		8	648-463-002
	Build Screw - Stainless Steel		8	648-547-000
21	Drive Screw (Nameplate)		2	648-464-000
22	Valve Plug Machine Screw (SS)		1	648-522-000
23	Washer - 416 SS		1	662-220-000
	Washer - 316 SS			662-219-000
24	Lockwasher (Split Ring)		1	662-221-000
25	Vent Screen		1	647-023-001

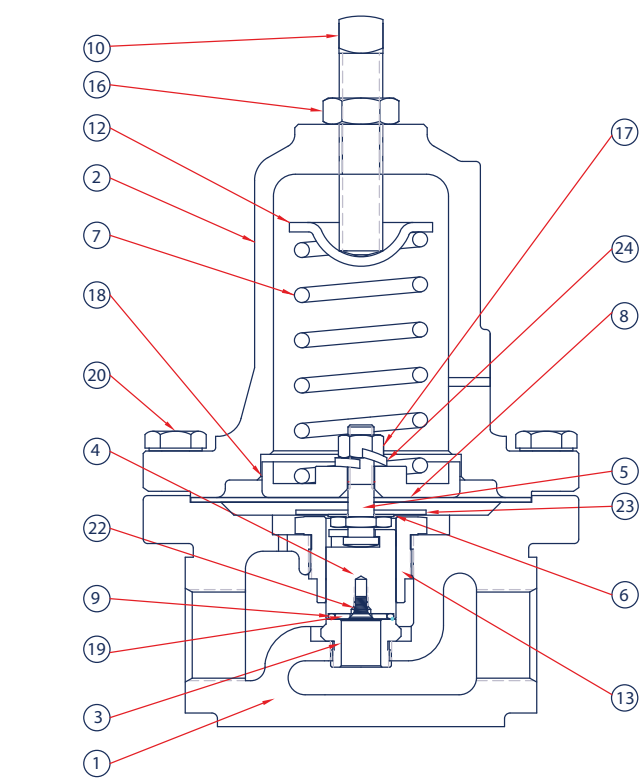

P98H Water Relief Capacities in Gallons per Minute (l/min) with Neoprene Diaphragm

Nominal Body Size, Inches (DN)	Spring		Relief Pressure Setting PSIG (BAR)	Flow at Relief Setting, GPM (l/min.)	Pressure Buildup Over Relief Setting, PSIG (BAR)								
	Part Number	Color Code			2 (0.14)	4 (0.28)	6 (0.41)	8 (0.55)	10 (0.69)	15 (1.0)	20 (1.4)	25 (1.7)	30 (2.1)
3/4, 1 (20, 25)	655-753-000	White	10 (0.69)	2.2 (8.3)	16.5 (62.5)	21.5 (81.4)	24.5 (92.7)	26.5 (100)	27.5 (104)	29.5 (112)	32.3 (122)	34.9 (132)	37.3 (141)

Nominal Body Size, Inches (DN)	Spring		Relief Pressure Setting PSIG (BAR)	Flow at Relief Setting, GPM (l/min.)	Pressure Buildup Over Relief Setting, PSIG (BAR)								
	Part Number	Color Code			5 (0.34)	7 (0.48)	10 (0.69)	15 (1.03)	20 (1.38)	30 (2.07)	50 (3.45)	75 (5.17)	100 (6.90)
	655-753-000	White	10 (0.69)	2.2 (8.3)	16.5 (62.5)	21.5 (81.4)	24.5 (92.7)	26.5 (100)	27.5 (104)	29.5 (112)	32.3 (122)	34.9 (132)	37.3 (141)
3/4, 1 (20, 25)	655-712-000	Yellow	15 (1.03)	1.8 (6.81)	18 (68.1)	23.5 (88.9)	27 (102)	31 (117)	33 (125)	37 (140)	45 (170)	53 (201)	59 (223)
			25 (1.72)	1.8 (6.81)	26 (98.4)	29 (110)	33 (125)	38 (144)	41 (155)	45 (170)	53 (201)	61 (231)	67 (254)
			35 (2.41)	1.8 (6.81)	32 (121)	34.5 (131)	37.5 (142)	42 (159)	45 (170)	49.5 (187)	56 (212)	64 (242)	70 (265)
	655-712-001	Green	35 (2.41)	1.5 (5.68)	20 (75.7)	25 (94.6)	28 (106)	33 (125)	37 (140)	44 (167)	50 (189)	57 (216)	63 (238)
			50 (3.45)	1.5 (5.68)	25 (94.6)	31 (117)	37 (140)	42.5 (161)	47 (178)	52 (197)	58 (220)	65 (246)	71.0 (269)
			75 (5.17)	1.5 (5.68)	35 (132)	41 (155)	45 (170)	50 (189)	53 (201)	58 (220)	63.5 (240)	68.5 (259)	74 (280)
	655-712-002	Red	75 (5.17)	1.3 (4.92)	19 (71.9)	25 (94.6)	32 (121)	37 (140)	41 (155)	47 (178)	57 (216)	66.5 (252)	72 (273)
			100 (6.90)	1.3 (4.92)	22 (83.3)	29 (110)	35 (132)	43 (163)	48.5 (184)	57 (216)	66.5 (252)	73 (276)	78 (295)
			125 (8.62)	1.3 (4.92)	27 (102)	34.5 (131)	42 (159)	50.5 (191)	57 (216)	67 (254)	73.5 (278)	78 (295)	83 (314)
	655-717-000	Blue	150 (10.34)	1 (3.78)	15 (56.8)	20 (75.7)	27 (102)	39 (148)	48 (182)	62 (235)	78 (295)	83 (314)	88 (333)
			175 (12.07)	1 (3.78)	19 (71.9)	24 (90.8)	32 (121)	50 (189)	60 (227)	72 (273)	82 (310)	88.5 (335)	94 (356)
			200 (13.79)	1 (3.78)	22 (83.3)	27 (102)	36 (136)	53 (201)	65 (246)	78 (295)	88 (333)	93 (352)	98 (371)

P98H Water Relief Capacities in Gallons per Minute (l/min) with Metal Diaphragm

Nominal Body Size, Inches (DN)	Spring		Relief Pressure Setting PSIG (BAR)	Flow at Relief Setting, GPM (l/min.)	Pressure Buildup Over Relief Setting, PSIG (BAR)								
	Part Number	Color Code			2 (0.14)	4 (0.28)	6 (0.41)	8 (0.55)	10 (0.69)	15 (1.0)	20 (1.4)	25 (1.7)	30 (2.1)
3/4, 1 (20, 25)	655-753-000	White	10 (0.69)	2.2 (8.3)	11.5 (43.5)	17.5 (66.2)	20.2 (76.5)	20.5 (77.6)	24 (90.8)	26.5 (100)	29.0 (110)	31.4 (119)	33.5 (127)

Nominal Body Size, Inches (DN)	Spring		Relief Pressure Setting PSIG (BAR)	Flow at Relief Setting, GPM (l/min.)	Pressure Buildup Over Relief Setting, PSIG (BAR)								
	Part Number	Color Code			5 (0.34)	7 (0.48)	10 (0.69)	15 (1.03)	20 (1.38)	30 (2.07)	50 (3.45)	75 (5.17)	100 (6.90)
3/4, 1 (20, 25)	655-712-000	Yellow	15 (1.03)	1.8 (6.81)	6 (22.7)	13 (49.2)	16 (60.6)	20 (75.7)	26 (98.4)	31 (117)	37 (140)	44 (167)	49 (185)
			25 (1.72)	1.8 (6.81)	13 (49.2)	16 (60.6)	19.5 (73.8)	24 (90.8)	32 (121)	35 (132)	40 (151)	46 (174)	50 (189)
			35 (2.41)	1.8 (6.81)	16 (60.9)	19 (71.9)	23 (87.1)	28 (106)	33 (125)	37 (140)	41 (155)	47 (178)	51 (193)
	655-712-001	Green	35 (2.41)	1.5 (5.68)	8 (30.3)	14 (53.0)	16.5 (62.5)	21 (79.5)	23 (87.1)	29.5 (112)	33 (125)	37 (140)	41 (155)
			50 (3.45)	1.5 (5.68)	11 (41.6)	15 (56.8)	18.5 (70.0)	24 (90.8)	28.5 (108)	35.5 (134)	44 (167)	49 (185)	53 (201)
			75 (5.17)	1.5 (5.68)	14 (53.0)	20 (75.7)	26 (98.4)	33 (125)	37 (140)	42.5 (161)	50 (189)	58 (220)	62 (235)
	655-712-002	Red	75 (5.17)	1.3 (4.92)	7 (26.5)	10 (37.9)	14 (53.0)	20 (75.7)	26 (98.4)	35 (132)	46 (174)	55 (208)	58 (220)
			100 (6.90)	1.3 (4.92)	9 (34.1)	12 (45.4)	18 (68.1)	25.5 (96.5)	32 (121)	41 (155)	54 (204)	62 (235)	68 (257)
			125 (8.62)	1.3 (4.92)	11 (41.6)	14.5 (54.9)	20 (75.7)	30 (114)	38 (144)	50 (189)	60.5 (229)	67.5 (255)	72 (273)
	655-717-000	Blue	150 (10.34)	1 (3.78)	7 (26.5)	9 (34.1)	12 (45.4)	17.5 (66.2)	23 (87.1)	34 (129)	51 (193)	66 (250)	76 (288)
			175 (12.07)	1 (3.78)	8 (30.3)	10 (37.9)	14 (53.0)	20.5 (77.6)	27 (102)	39 (148)	59 (223)	74 (280)	81 (307)
			200 (13.79)	1 (3.78)	9 (34.1)	12 (45.4)	17 (64.3)	24.5 (92.7)	32.5 (123)	47 (178)	66 (250)	79 (299)	85 (322)

P98H Steam Relief Capacities in Pounds per Hour (kg/h) with Metal Diaphragm Only

Nominal Body Size, Inches (DN)	Spring		Relief Pressure Setting PSIG (BAR)	Flow at Relief Setting, GPM (l/min.)	Pressure Buildup Over Relief Setting, PSIG (BAR)								
	Part Number	Color Code			2 (0.14)	4 (0.28)	6 (0.41)	8 (0.55)	10 (0.69)	15 (1.0)	20 (1.4)	25 (1.7)	30 (2.1)
3/4, 1 (20, 25)	655-753-000	White	10 (0.69)	25 (11.3)	136 (61.7)	200 (90.7)	240 (109)	280 (127)	310 (141)	370 (168)	417 (189)	463 (210)	509 (231)

Nominal Body Size, Inches (DN)	Spring		Relief Pressure Setting PSIG (BAR)	Flow at Relief Setting, LB/H (kg/h)	Pressure Buildup Over Relief Setting, PSIG (BAR)								
	Part Number	Color Code			5 (0.34)	7 (0.48)	10 (0.69)	15 (1.03)	20 (1.38)	30 (2.07)	50 (3.45)	75 (5.17)	100 (6.90)
3/4, 1 (20, 25)	655-712-000	Yellow	15 (1.03)	25 (11.3)	91 (41.3)	135 (61.2)	180 (81.6)	260 (118)	360 (163)	440 (200)	580 (263)	770 (349)	950 (431)
			25 (1.72)	25 (11.3)	120 (54.4)	180 (81.6)	230 (104)	330 (150)	395 (179)	510 (231)	660 (299)	850 (386)	1030 (467)
			35 (2.41)	25 (11.3)	135 (61.2)	190 (86.2)	250 (113)	360 (163)	455 (206)	590 (268)	730 (331)	920 (417)	1100 (499)
	655-712-001	Green	35 (2.41)	25 (11.3)	68 (30.8)	110 (49.9)	160 (72.6)	230 (104)	330 (150)	500 (227)	625 (284)	785 (356)	940 (426)
			50 (3.45)	25 (11.3)	110 (48.9)	160 (72.6)	210 (95.3)	340 (154)	430 (195)	640 (290)	910 (413)	1100 (499)	1300 (590)
			75 (5.17)	25 (11.3)	180 (81.6)	230 (104)	320 (145)	445 (202)	630 (286)	820 (372)	1100 (499)	1350 (612)	1550 (703)
	655-712-002	Red	75 (5.17)	25 (11.3)	130 (59.0)	155 (70.3)	210 (95.3)	320 (145)	410 (186)	590 (268)	1050 (476)	1350 (612)	1550 (703)
			100 (6.90)	25 (11.3)	135 (61.2)	160 (72.6)	230 (104)	350 (159)	455 (206)	680 (308)	1180 (535)	1600 (726)	1800 (816)
			125 (8.62)	25 (11.3)	145 (65.8)	205 (93.0)	280 (127)	450 (204)	540 (245)	860 (390)	1400 (635)	1770 (803)	2000 (907)
	655-717-000	Blue	150 (10.34)	25 (11.3)	86 (39.0)	135 (61.2)	200 (90.7)	340 (154)	455 (206)	720 (327)	1270 (576)	1900 (862)	2200 (998)
			175 (12.07)	25 (11.3)	91 (41.3)	145 (65.8)	230 (104)	350 (159)	500 (227)	770 (349)	1350 (612)	2000 (907)	2400 (1089)
			200 (13.79)	25 (11.3)	160 (72.6)	225 (102)	320 (145)	450 (204)	630 (286)	950 (431)	1600 (726)	2300 (1043)	2700 (1225)

P98H Air Relief Capacities in SCFH (Nm^3/h) with Neoprene Diaphragm

Nominal Body Size, Inches (DN)	Spring		Relief Pressure Setting PSIG (BAR)	Flow at Relief Setting, GPM (l/min.)	Pressure Buildup Over Relief Setting, PSIG (BAR)								
	Part Number	Color Code			2 (0.14)	4 (0.28)	6 (0.41)	8 (0.55)	10 (0.69)	15 (1.0)	20 (1.4)	25 (1.7)	30 (2.1)
3/4, 1 (20, 25)	655-753-000	White	10 (0.69)	500 (13.4)	4600 (166)	6900 (185)	7400 (198)	8000 (214)	8900 (239)	10,000 (268)	11,000 (297)	11,100 (297)	12,300 (330)

Nominal Body Size, Inches (DN)	Spring		Relief Pressure Setting PSIG (BAR)	Flow at Relief Setting, SCFH (Nm^3/h)	Pressure Buildup Over Relief Setting, PSIG (BAR)								
	Part Number	Color Code			5 (0.34)	7 (0.48)	10 (0.69)	15 (1.03)	20 (1.38)	30 (2.07)	50 (3.45)	75 (5.17)	100 (6.90)
3/4, 1 (20, 25)	655-712-000	Yellow	15 (1.03)	500 (13.4)	5000 (134)	6500 (174)	7700 (206)	9500 (247)	9900 (265)	11,900 (319)	15,900 (426)	20,900 (560)	25,900 (694)
			25 (1.72)	500 (13.4)	7000 (188)	8500 (228)	9700 (260)	12,000 (322)	13,000 (348)	13,900 (373)	17,900 (480)	22,900 (614)	27,900 (748)
			35 (2.41)	500 (13.4)	9000 (241)	10,500 (281)	12,000 (322)	13,000 (348)	14,000 (375)	17,000 (456)	20,800 (557)	26,000 (697)	31,000 (831)
	655-712-001	Green	35 (2.41)	500 (13.4)	4500 (121)	5500 (147)	8500 (228)	13,000 (348)	14,000 (375)	17,000 (456)	20,800 (557)	26,000 (697)	31,000 (831)
			50 (3.45)	500 (13.4)	6000 (161)	7000 (188)	11,500 (308)	15,500 (415)	17,000 (456)	20,000 (536)	24,000 (643)	29,000 (777)	34,000 (911)
			75 (5.17)	500 (13.4)	7500 (201)	10,000 (268)	15,000 (402)	20,000 (536)	22,000 (590)	25,000 (670)	29,000 (777)	34,000 (911)	39,000 (1045)
	655-712-002	Red	75 (5.17)	500 (13.4)	5000 (134)	6500 (174)	10,000 (268)	15,000 (402)	20,000 (536)	24,000 (643)	29,000 (777)	34,000 (911)	39,000 (1045)
			100 (6.90)	500 (13.4)	6500 (174)	8500 (228)	13,000 (348)	20,000 (536)	24,000 (643)	29,000 (777)	34,000 (911)	39,000 (1045)	45,000 (1206)
			125 (8.62)	500 (13.4)	7000 (188)	9000 (241)	14,500 (389)	23,000 (616)	28,000 (750)	33,000 (884)	39,000 (1045)	45,000 (1206)	50,000 (1340)
	655-717-000	Blue	150 (10.34)	500 (13.4)	4700 (126)	6000 (161)	9000 (241)	14,000 (375)	19,000 (509)	28,000 (750)	42,000 (1126)	50,000 (1340)	56,000 (1501)
			175 (12.07)	500 (13.4)	5700 (153)	7000 (188)	10,500 (281)	17,000 (456)	23,000 (616)	34,000 (911)	49,000 (1313)	56,000 (1501)	61,000 (1635)
			200 (13.79)	500 (13.4)	5700 (153)	7500 (201)	12,000 (322)	18,000 (482)	24,000 (643)	36,000 (965)	54,000 (1447)	61,000 (1635)	66,000 (1769)

P98H Air Relief Capacities in SCFH (Nm³/h) with Metal Diaphragm

Nominal Body Size, Inches (DN)	Spring		Relief Pressure Setting PSIG (BAR)	Flow at Relief Setting, GPM (l/min.)	Pressure Buildup Over Relief Setting, PSIG (BAR)								
	Part Number	Color Code			2 (0.14)	4 (0.28)	6 (0.41)	8 (0.55)	10 (0.69)	15 (1.0)	20 (1.4)	25 (1.7)	30 (2.1)

Nominal Body Size, Inches (DN)	Spring		Relief Pressure Setting PSIG (BAR)	Flow at Relief Setting, SCFH (Nm³/h)	Pressure Buildup Over Relief Setting, PSIG (BAR)								
	Part Number	Color Code			5 (0.34)	7 (0.48)	10 (0.69)	15 (1.03)	20 (1.38)	30 (2.07)	50 (3.45)	75 (5.17)	100 (6.90)
3/4, 1 (20, 25)	655-712-000	Yellow	15 (1.03)	500 (13.4)	2000 (53.6)	3000 (80.4)	4000 (107)	5700 (153)	8500 (228)	10,400 (279)	13,900 (373)	18.000 (482)	22,500 (603)
			25 (1.72)	500 (13.4)	2700 (72.4)	4000 (107)	5200 (139)	7200 (193)	8700 (233)	12,100 (324)	15,600 (418)	20,000 (536)	24,000 (643)
			35 (2.41)	500 (13.4)	3000 (80.4)	4200 (113)	5500 (147)	8000 (214)	10,000 (268)	13,000 (349)	17,300 (464)	21,700 (582)	26,000 (697)
	655-712-001	Green	35 (2.41)	500 (13.4)	1500 (40.2)	2500 (67.0)	3500 (93.8)	5200 (139)	7200 (193)	11,000 (295)	17,000 (456)	21,600 (579)	26,000 (697)
			50 (3.45)	500 (13.4)	2500 (67.0)	3500 (93.8)	4700 (126)	7500 (201)	9500 (255)	14,000 (375)	20,000 (536)	24,000 (643)	28,600 (766)
			75 (5.17)	500 (13.4)	4000 (107)	5200 (139)	7000 (188)	10,000 (268)	14,000 (375)	18,000 (482)	25,000 (670)	30,000 (804)	35,000 (938)
	655-712-002	Red	75 (5.17)	500 (13.4)	2900 (77.7)	3400 (91.1)	4700 (126)	7000 (188)	9200 (247)	13,000 (348)	23,000 (616)	30,000 (804)	35,000 (938)
			100 (6.90)	500 (13.4)	3000 (80.4)	3500 (93.8)	5000 (134)	7700 (206)	10,000 (268)	15,000 (402)	26,000 (697)	35,000 (938)	40,000 (1072)
			125 (8.62)	500 (13.4)	3200 (85.8)	4500 (121)	6200 (166)	9500 (255)	12,000 (322)	19,000 (509)	31,000 (831)	39,000 (1045)	45,000 (1206)
	655-717-000	Blue	150 (10.34)	500 (13.4)	1900 (50.9)	3000 (80.4)	4500 (121)	7500 (201)	10,000 (268)	16,000 (429)	28,000 (750)	42,000 (1126)	50,000 (1340)
			175 (12.07)	500 (13.4)	2000 (53.6)	3200 (85.8)	5000 (134)	7700 (206)	11,000 (295)	17,000 (456)	30,000 (804)	45,000 (1206)	54,000 (1447)
			200 (13.79)	500 (13.4)	3500 (93.8)	5000 (134)	7000 (188)	10,000 (268)	14,000 (375)	21,000 (563)	35,000 (938)	52,000 (1394)	60,000 (1608)

P98H Flanged Unit Dimension, Inches

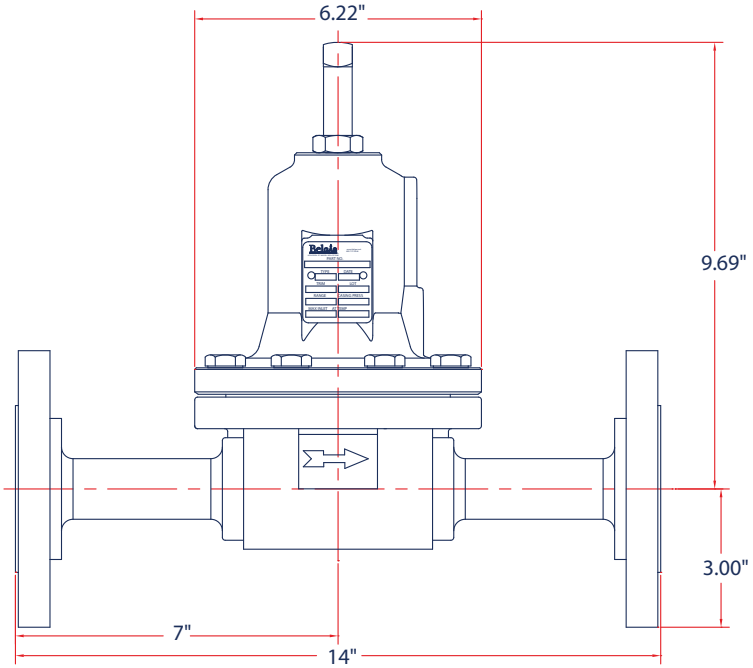

P98H Repair Kits

	Kit Includes	Part Number
302SS Diaphragm	302SS Diaphragm (2), Diaphragm Gasket, Thru Hole Gasket, 416SS Orifice, 416SS/Nitrile Valve Plug, Seat O-ring Retainer and O-ring, Seat Machine Screw	971-P98-000
	302SS Diaphragm (2), Diaphragm Gasket, Thru Hole Gasket, 416SS Orifice, 416SS/M to M Valve Plug	971-P98-001
	302SS Diaphragm (2), Diaphragm Gasket, Thru Hole Gasket, 416SS Orifice, 416SS/FKM Valve Plug, Seat O-ring Retainer and O-ring, Seat Machine Screw	971-P98-004
	302SS Diaphragm (2), Diaphragm Gasket, Thru Hole Gasket, 316SS Orifice, 316SS/M to M Valve Plug	971-P98-006
	302SS Diaphragm (2), Diaphragm Gasket, Thru Hole Gasket, 316SS Orifice, 316SS/Nitrile Valve Plug, Seat O-ring Retainer and O-ring, Seat Machine Screw	971-P98-028
Neoprene Diaphragm	Neoprene Diaphragm, Thru Hole Gasket, 416SS Orifice, 416SS/Nitrile Valve Plug, Seat O-ring Retainer and O-ring, Seat Machine Screw	971-P98-002
	Neoprene Diaphragm, Thru Hole Gasket, 416SS Orifice, 416SS/M to M Valve Plug	971-P98-003
	Neoprene Diaphragm, Thru Hole Gasket, 416SS Orifice, 416SS/FKM Valve Plug, Seat O-ring Retainer and O-ring, Seat Machine Screw	971-P98-016
	Neoprene Diaphragm, Thru Hole Gasket, 316SS Orifice, 316SS/M to M Valve Plug	971-P98-018
	Neoprene Diaphragm, Thru Hole Gasket, 316SS Orifice, 316SS/Nitrile Valve Plug, Seat O-ring Retainer and O-ring, Seat Machine Screw	971-P98-030
	Neoprene Diaphragm, Thru Hole Gasket, 316SS Orifice, 316SS/FKM Valve Plug, Seat O-ring Retainer and O-ring, Seat Machine Screw	971-P98-019
Monel Diaphragm	Monel Diaphragm (2), Diaphragm Gasket, Thru Hole Gasket, 416SS Orifice, 416SS/M to M Valve Plug	971-P98-021
	Monel Diaphragm (2), Diaphragm Gasket, Thru Hole Gasket, 416SS Orifice, 416SS/Nitrile Valve Plug, Seat O-ring Retainer and O-ring, Seat Machine Screw	971-P98-024
	Monel Diaphragm (2), Diaphragm Gasket, Thru Hole Gasket, 416SS Orifice, 416SS/FKM Valve Plug, Seat O-ring Retainer and O-ring, Seat Machine Screw	971-P98-022
	Monel Diaphragm (2), Diaphragm Gasket, Thru Hole Gasket, 316SS Orifice, 316SS/M to M Valve Plug	971-P98-025
	Monel Diaphragm (2), Diaphragm Gasket, Thru Hole Gasket, 316SS Orifice, 316SS/Nitrile Valve Plug, Seat O-ring Retainer and O-ring, Seat Machine Screw	971-P98-031
	Monel Diaphragm (2), Diaphragm Gasket, Thru Hole Gasket, 316SS Orifice, 316SS/FKM Valve Plug, Seat O-ring Retainer and O-ring, Seat Machine Screw	971-P98-026
FKM Diaphragm	FKM Diaphragm (2), Diaphragm Gasket, Thru Hole Gasket, 416SS Orifice, 416SS/M to M Valve Plug	971-P98-009
	FKM Diaphragm (2), Diaphragm Gasket, Thru Hole Gasket, 416SS Orifice, 416SS/FKM Valve Plug, Seat O-ring Retainer and O-ring, Seat Machine Screw	971-P98-010
	FKM Diaphragm, Thru Hole Gasket, 416SS Orifice, 416SS/Nitrile Valve Plug, Seat O-ring Retainer and O-ring, Seat Machine Screw	971-P98-012
	FKM Diaphragm (2), Diaphragm Gasket, Thru Hole Gasket, 416SS Orifice, 416SS/FKM Valve Plug,	971-P98-014
	FKM Diaphragm, Thru Hole Gasket, 316SS Orifice, 316SS/M to M Valve Plug	971-P98-013
	FKM Diaphragm, Thru Hole Gasket, 316SS Orifice, 316SS/Nitrile Valve Plug, Seat O-ring Retainer and O-ring, Seat Machine Screw	971-P98-029

P98H Back Pressure Regulator / Relief Valve 1-1/2" or 2"

The P98H monitors upstream pressure and opens to relieve excess pressure increases above setpoint. As a Back Pressure Regulator, the upstream pressure is monitored and released downstream when the setpoint is exceeded.

Applications

- Pulp and Paper - Boilers, Heaters, PM Drums
- Chemical Boilers, Process Heaters
- Water and Waste Water Systems
- Steam Injection

P98H Part Matrix

P98H					**0**					
									Body Size	
	14								1-1/2 NPT	
	16								2 NPT	
									Spring Range	
									PSIG BAR	
		035							5 - 35 0.33 - 2.41	
		065							20 - 65 1.38 - 4.48	
		100							50 - 100 3.45 - 6.89	
		170							80 - 170 5.51-11.72	
									Options	
			0						Standard	
			A						150 RF*	* Steel Bodies Only
			B						300 RF*	
			C						600 RF*	
			D						Socket Weld*	
									Registration	
				0					Internal Registration	
				2					External Registration	
					0				Place Holder	
									Valve Plug/Orifice	
						A			416 SST (Metal to Metal)	
						E			416 SST / Nitrile	
						I			316 SST (Metal to Metal)	
						N			316 SST / Neoprene	
									Diaphragm	
							0		302 SS	
							3		Neoprene	
									Case / Body Material	
								0	Iron/Iron	
								1	Steel/Steel	
								3	Iron/Steel	

Specifications

Maximum Inlet Pressure (Set Pressure Plus Build Up)		
Body	300 PSIG	WCB Steel
	250 PSIG @ 400˚F	Cast Iron
	300 PSIG @ 300˚F	Cast Iron
Pressure Ranges	5 – 35 PSIG	
	20 – 65 PSIG	
	50 – 100 PSIG	
	80 – 170 PSIG	
Body Size	1-1/2 NPT	
	2 NPT	
Weight Approximate		
1-1/2 NPT	55 lb	25 kg
2 NPT		

Spring Range

Body Size	PSIG	BAR	Spring Color Code
1-1/2 and 2 NPT	5 - 35	.34 - 2.4	Dark Gray
	20 - 65	1.4 - 4.5	Light Blue
	50 - 100	3.4 - 6.9	Light Gray
	80 - 170	5.5 - 11.7	Black

P98H Maximum Body & Bonnet Temp Range

Cast Iron	–40° to +406°F	–40° to +208°C
Steel	–20° to +450°F	–29° to +232°C

P98H Maximum Diaphragm & Seat Temp Range

Nitrile	–40° to +180°F	–40° to +82°C
Neoprene	–40° to +180°F	–40° to +82°C

Materials of Construction

Body, Bonnet, Diaphragm Case	
Options	Cast Iron
	Steel
Diaphragm	
Options	302 SS
	Neoprene
Valve Plug / Seat	
Options	Nitrile Valve Plug / SS Orifice
	Metal Valve Plug / SS Orifice

P98H Dimension, Inches

Nominal Body Size, Inches	A		B	C (Maximum)	D
	NPT or SWE	Flanged			
1-1/2, 2	6.62	14.0	1.88	14.12	8.19

Installation

These relief valves may be installed in any position, as long as flow will be in the same direction as that of the arrow cast on the body.

P98H Parts 1-1/2" & 2"

Item		Description	Qty.	Part Number
1	Body	Cast Iron 1-1/2"	1	664-430-000
		Steel 1-1/2"		664-431-000
		Cast Iron 2"		664-430-001
		Steel 2"		664-431-001
2	Bonnet	Steel Tapped	1	604-270-000
		Iron Tapped		604-269-000
3	Valve Plug	416 Stainless Steel w/Elastomer	1	639-142-000
		416 Stainless Steel/ Metal to Metal		639-141-000
		316 Stainless Steel w/Elastomer		639-142-001
		316 Stainless Steel/ Metal to Metal		639-141-001
4	Valve Plug Guide	416 Stainless Steel	1	626-118-000
		316 Stainless Steel		626-118-001
5	Pusher Post	416 SS Elastomer	1	613-040-000
		416 SS Metal to Metal		613-039-000
		316 SS Elastomer		613-040-001
		316 SS Metal to Metal		613-039-001
6	Diaphragm Assembly Gasket		2	624-099-000
7	Range Springs	5 - 35 PSIG, Dark Gray	1	655-768-000
		20 - 65 PSIG, Light Blue		655-768-001
		50 - 100 PSIG, Light Gray		655-768-002
		80 - 170 PSIG, Black		655-768-003
8	Orifice	416SS Metal to Metal	1	688-066-000
		316SS Metal to Metal		688-066-001
		416SS Composite		688-067-000
		316SS Composite		688-067-001
9	Diaphragm	302SS	2	618-108-000
		Neoprene	1	618-109-000
10	Diaphragm Gasket (Metal Dia's Only)		1	624-100-000
11	Lower Spring Seat		1	626-117-000
12	Upper Spring Seat		1	626-116-000
13	Piston	Steel	2	637-337-000
		Stainless		637-337-001
14	Adjusting Screw - Steel		1	648-569-000
15	Lock Nut, Steel		1	634-213-000
16	L-Ring Retainer	416SS (Elastomer Plug Only)	1	643-222-000
		316SS (Elastomer Plug Only)		643-222-001
17	L-ring - Nitrile (Elastomer Plug Only)		1	649-337-000
18	Flat Head Screw (Elastomer Plug Only)		1	648-570-000
19	Build Screw		8	648-467-009
20	Diaphragm Assembly Locknut		1	634-212-000
21	Vent Screen		1	836-004-000
22	Lock Washer (Split Ring)		1	662-000-018
23	Name Plate (not shown)		1	632-524-000
24	Name Plate Drive Screw (not shown)		2	648-464-000

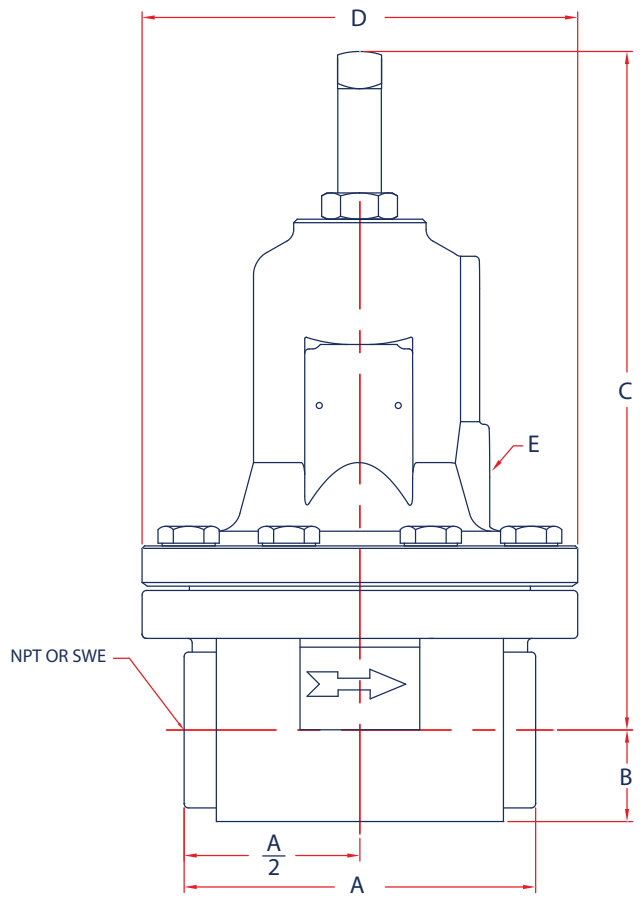

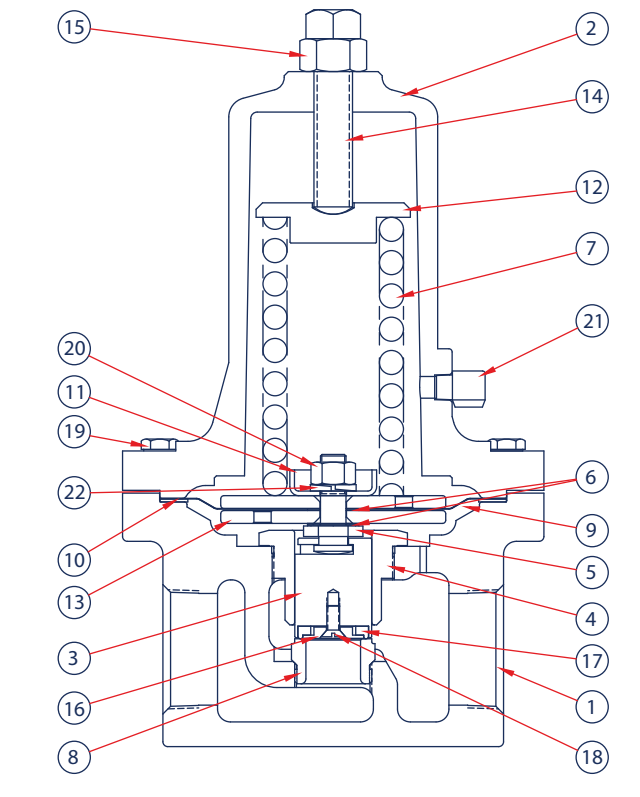

P98H Air Relief Capacities with an Elastomer Diaphragm

Body Size, Inches (DN)	Spring Range		Relief Pressure Setting		Flow at Relief Setting		Pressure Buildup Over Relief Setting, PSIG (BAR)											
							5 (0.34)		7 (0.48)		10 (0.69)		15 (1.03)		20 (1.38)		30 (2.07)	
	Range Part Number	Color Code	PSIG	BAR	SCFH	Nm³/h	SCFH	Nm³/h	SCFH	Nm³/h	SCFH	Nm³/h	SCFH	Nm³/h	SCFH	Nm³/h	SCFH	Nm³/h
1-1/2" (40) & 2" (50)	5 to 35 655-768-000	Dark Gray	5	0.3	900	24.1	6300	169	7000	188	10000	268	20000	536	29000	616	41000	1099
			10	0.7	900	24.1	6500	174	8000	214	12000	322	18000	482	26000	697	32000	1179
			15	1.0	900	24.1	7000	188	9000	241	13000	348	20000	536	29000	777	35000	938
			25	1.7	900	24.1	7200	193	10000	268	15000	402	22000	590	33000	884	41000	1099
			35	2.4	900	24.1	9000	241	11000	295	16000	429	24000	643	37000	992	37000	992
	20 to 65 655-768-001	Light Blue	25	1.7	900	24.1	8500	228	11000	295	15000	402	21000	563	27000	724	37600	1008
			35	2.4	900	24.1	8600	230	12000	322	17000	456	23000	616	29000	777	43000	1152
			50	3.4	900	24.1	9300	249	13000	348	19000	509	25000	670	33000	884	48000	1286
			65	4.5	900	24.1	9600	257	13000	348	19000	509	26000	697	37000	992	57000	1528
	50 to 100 655-768-002	Light Gray	50	3.4	900	24.1	6100	163	8900	239	12000	322	20000	536	27000	724	41000	1099
			75	5.2	900	24.1	6200	166	9000	241	13000	348	21000	563	29000	777	47000	1260
			100	6.9	900	24.1	6600	177	9700	260	15000	402	23000	616	32000	858	54000	1447
	80 to 170 655-768-003	Black	75	5.2	900	24.1	4600	123	6500	174	10000	268	17000	456	22000	590	36000	965
			100	6.9	900	24.1	5600	150	8500	228	12000	322	19000	509	26000	697	42000	1126
			125	8.6	900	24.1	6200	166	9200	247	14000	375	22000	590	30000	804	47000	1260
			170	11.7	900	24.1	6500	174	940	252	15000	402	23000	616	32000	858	52000	1394

P98H Air Relief Capacities with a Stainless Steel Diaphragm

Body Size, Inches (DN)	Spring Range		Relief Pressure Setting		Flow at Relief Setting		Pressure Buildup Over Relief Setting, PSIG (BAR)											
							5 (0.34)		7 (0.48)		10 (0.69)		15 (1.03)		20 (1.38)		30 (2.07)	
	Range Part Number	Color Code	PSIG	BAR	SCFH	Nm³/h	SCFH	Nm³/h	SCFH	Nm³/h	SCFH	Nm³/h	SCFH	Nm³/h	SCFH	Nm³/h	SCFH	Nm³/h
1-1/2" (40) & 2" (50)	5 to 35 655-768-000	Dark Gray	5	0.3	900	24.1	6000	161.0	8800	236.0	10500	281.0	16000	429.0	18000	482.0	23000	616.0
			10	0.7	900	24.1	7200	193.0	10000	268.0	13500	362.0	18000	482.0	21000	563.0	25700	689.0
			15	1.0	900	24.1	7500	201.0	10500	281.0	14500	389.0	19500	523.0	23000	616.0	28000	750.0
			25	1.7	900	24.1	8500	228.0	11000	295.0	16000	429.0	22000	590.0	27000	724.0	32700	876.0
			35	2.4	900	24.1	8700	233.0	11700	314.0	17000	456.0	24000	643.0	30000	804.0	38000	1018.0
	20 to 65 655-768-001	Light Blue	25	1.7	900	24.1	6000	161.0	8000	214.0	11000	295.0	17500	469.0	20000	536.0	32000	858.0
			35	2.4	900	24.1	6700	180.0	8800	236.0	15000	402.0	21000	563.0	27000	724.0	37000	992.0
			50	3.4	900	24.1	7000	188.0	9300	249.0	16000	429.0	23000	616.0	29000	777.0	42000	1126.0
			65	4.5	900	24.1	8000	214.0	11000	295.0	17000	456.0	25000	670.0	32000	858.0	48000	1286.0
	50 to 100 655-768-002	Light Gray	50	3.4	900	24.1	2400	64.0	7000	188.0	10500	281.0	16000	429.0	20000	536.0	30000	804.0
			75	5.2	900	24.1	3800	102.0	10500	281.0	15500	415.0	23000	616.0	30000	804.0	44000	1179.0
			100	6.9	900	24.1	6000	161.0	12000	322.0	18000	482.0	26000	697.0	34000	911.0	50000	1340.0
	80 to 170 655-768-003	Black	75	5.2	900	24.1	2700	72.0	6000	161.0	9000	241.0	14000	375.0	18000	482.0	30000	804.0
			100	6.9	900	24.1	3000	80.0	8000	214.0	15000	402.0	21000	563.0	27000	724.0	41000	1099.0
			125	8.6	900	24.1	7000	188.0	9000	241.0	16500	442.0	23000	616.0	30000	804.0	46000	1233.0
			170	11.7	900	24.1	7300	196.0	10000	268.0	17000	456.0	24000	643.0	32000	858.0	48000	1286.0

P98H Water Relief Capacities with an Elastomer Diaphragm

Body Size, Inches (DN)	Spring Range		Relief Pressure Setting		Flow at Relief Setting		Pressure Buildup Over Relief Setting, PSIG (BAR)											
							5 (0.34)		7 (0.48)		10 (0.69)		15 (1.03)		20 (1.38)		30 (2.07)	
	Range Part Number	Color Code	PSIG	BAR	GPM	l/min	GPM	l/min	GPM	l/min	GPM	l/min	GPM	l/min	GPM	l/min	GPM	l/min
1-1/2" (40) & 2" (50)	5 to 35 655-768-000	Dark Gray	5	0.3	3.6	13.6	15	57.0	22	83.0	33	125.0	38	144.0	43	163.0	50	189.0
			10	0.7	3.6	13.6	18	68.0	26	98.0	37	140.0	41	155.0	45	170.0	52	197.0
			15	1.0	3.6	13.6	21	80.0	30	114.0	40	151.0	55	208.0	59	223.0	67	254.0
			25	1.7	3.6	13.6	26	98.0	36	136.0	50	189.0	68	257.0	87	329.0	96	363.0
			35	2.4	3.6	13.6	32	121.0	40	151.0	56	212.0	75	284.0	90	341.0	98	371.0
	20 to 65 655-768-001	Light Blue	25	1.7	3.0	11.4	16	61.0	22	83.0	32	121.0	50	189.0	65	246.0	72	273.0
			35	2.4	3.0	11.4	20	76.0	26	98.0	36	136.0	55	208.0	70	265.0	100	379.0
			50	3.4	3.0	11.4	25	95.0	31	117.0	40	151.0	60	227.0	78	295.0	115	435.0
			65	4.5	3.0	11.4	35	132.0	41	155.0	50	189.0	70	265.0	95	360.0	130	492.0
	50 to 100 655-768-002	Light Gray	50	3.4	2.5	9.5	15	57.0	24	91.0	28	106.0	40	151.0	62	235.0	100	379.0
			75	5.2	2.5	9.5	19	72.0	28	106.0	32	121.0	45	170.0	68	257.0	110	416.0
			100	6.9	2.5	9.5	22	83.0	32	121.0	35	132.0	50	189.0	75	284.0	120	454.0
	80 to 170 655-768-003	Black	75	5.2	2.3	8.7	7	27.0	12	45.0	18	68.0	34	129.0	40	151.0	85	322.0
			100	6.9	2.3	8.7	9	34.0	14	53.0	20	76.0	37	140.0	46	174.0	90	341.0
			125	8.6	2.3	8.7	12	45.0	17	64.0	25	95.0	40	151.0	51	193.0	95	360.0
			170	11.7	2.3	8.7	15	57.0	20	76.0	28	106.0	45	170.0	55	208.0	100	379.0

P98H Water Relief Capacities with a Stainless Steel Diaphragm

Body Size, Inches (DN)	Spring Range		Relief Pressure Setting		Flow at Relief Setting		Pressure Buildup Over Relief Setting, PSIG (BAR)											
							5 (0.34)		7 (0.48)		10 (0.69)		15 (1.03)		20 (1.38)		30 (2.07)	
	Range Part Number	Color Code	PSIG	BAR	GPM	l/min	GPM	l/min	GPM	l/min	GPM	l/min	GPM	l/min	GPM	l/min	GPM	l/min
1-1/2" (40) & 2" (50)	5 to 35 655-768-000	Dark Gray	5	0.3	3.6	13.6	18	68.0	3	27.0	35	132.0	40	151.0	45	170.0	53	201.0
			10	0.7	3.6	13.6	20	76.0	27	102.0	39	148.0	43	163.0	47	178.0	55	208.0
			15	1.0	3.6	13.6	23	87.0	30	114.0	43	163.0	60	227.0	64	242.0	73	276.0
			25	1.7	3.6	13.6	26	98.0	34	129.0	46	174.0	65	246.0	75	284.0	82	310.0
			35	2.4	3.6	13.6	29	110.0	37	140.0	50	189.0	70	265.0	82	310.0	95	360.0
	20 to 65 655-768-001	Light Blue	25	1.7	3.0	11.4	17	64.0	24	91.0	36	136.0	48	182.0	65	246.0	71	269.0
			35	2.4	3.0	11.4	20	76.0	27	102.0	40	151.0	52	197.0	70	265.0	80	303.0
			50	3.4	3.0	11.4	24	91.0	30	114.0	43	163.0	57	216.0	76	288.0	90	341.0
			65	4.5	3.0	11.4	30	114.0	35	132.0	46	174.0	63	238.0	80	303.0	100	379.0
	50 to 100 655-768-002	Light Gray	50	3.4	2.5	9.5	14	53.0	23	87.0	34	129.0	47	178.0	65	246.0	85	322.0
			75	5.2	2.5	9.5	17	64.0	26	98.0	37	140.0	53	201.0	70	265.0	92	348.0
			100	6.9	2.5	9.5	20	76.0	30	114.0	40	151.0	58	220.0	76	288.0	102	386.0
	80 to 170 655-768-003	Black	75	5.2	2.3	8.7	8	30.0	13	49.0	23	87.0	33	125.0	50	189.0	65	246.0
			100	6.9	2.3	8.7	10	38.0	16	61.0	26	98.0	37	140.0	56	212.0	72	273.0
			125	8.6	2.3	8.7	13	49.0	18	68.0	29	110.0	42	159.0	60	227.0	80	303.0
			170	11.7	2.3	8.7	16	61.0	20	76.0	32	121.0	46	174.0	63	238.0	85	322.0

P98H Steam Relief Capacities with a Stainless Steel Diaphragm

Body Size, Inches (DN)	Spring Range		Relief Pressure Setting		Flow at Relief Setting		Pressure Buildup Over Relief Setting, PSIG (BAR)											
							5 (0.34)		7 (0.48)		10 (0.69)		15 (1.03)		20 (1.38)		30 (2.07)	
	Range Part Number	Color Code	PSIG	BAR	GPM	l/min	GPM	l/min	GPM	l/min	GPM	l/min	GPM	l/min	GPM	l/min	GPM	l/min
1-1/2" (40) & 2" (50)	5 to 35 655-768-000	Dark Gray	5	0.3	45	20.4	300	136.0	440	200.0	525	238.0	820	372.0	940	426.0	1100	499.0
			10	0.7	45	20.4	360	163.0	500	227.0	675	306.0	945	429.0	1060	481.0	1300	590.0
			15	1.0	45	20.4	375	170.0	525	238.0	725	329.0	975	442.0	1180	535.0	1420	644.0
			25	1.7	45	20.4	425	193.0	550	249.0	800	363.0	1100	499.0	1350	612.0	1650	748.0
			35	2.4	45	20.4	435	197.0	585	265.0	850	386.0	1200	544.0	1500	680.0	1900	862.0
	20 to 65 655-768-001	Light Blue	25	1.7	45	20.4	300	136.0	400	181.0	550	249.0	875	397.0	1000	454.0	1620	735.0
			35	2.4	45	20.4	335	152.0	440	200.0	750	340.0	1025	465.0	1350	612.0	1850	839.0
			50	3.4	45	20.4	350	159.0	465	211.0	800	363.0	1150	522.0	1450	658.0	2100	953.0
			65	4.5	45	20.4	400	181.0	550	249.0	850	386.0	1250	567.0	1600	726.0	2400	1089.0
	50 to 100 655-768-002	Light Gray	50	3.4	45	20.4	120	54.0	35	159.0	525	238.0	800	363.0	1000	454.0	1500	680.0
			75	5.2	45	20.4	190	86.0	520	236.0	775	352.0	1150	522.0	1500	680.0	2200	998.0
			100	6.9	45	20.4	300	136.0	600	272.0	900	408.0	1300	590.0	1700	771.0	2500	1134.0
	80 to 170 655-768-003	Black	75	5.2	45	20.4	145	66.0	300	136.0	450	204.0	700	318.0	900	408.0	1500	680.0
			100	6.9	45	20.4	150	68.0	400	181.0	750	340.0	1025	465.0	1350	612.0	2050	930.0
			125	8.6	45	20.4	350	159.0	450	204.0	825	374.0	1150	522.0	1500	680.0	2300	1043.0
			170	11.7	45	20.4	365	166.0	500	227.0	850	386.0	1200	544.0	160	726.0	2400	1089.0

P98H Flanged 1-1/2 & 2

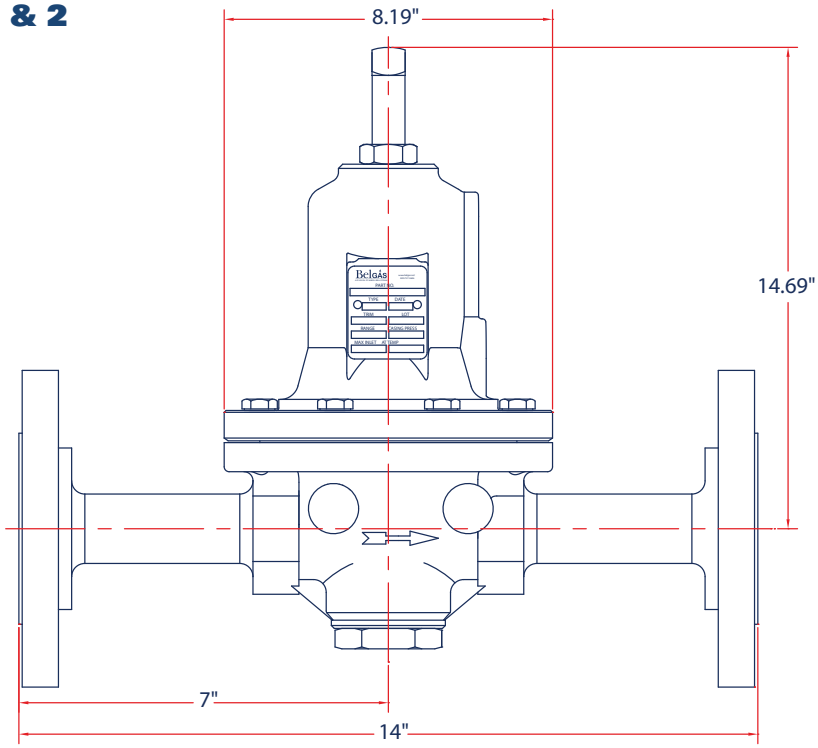

P98H 1-1/2" & 2" Repair Kits

	Kit Includes	Part Number
302SS Diaphragm	302SS Diaphragm (2), Diaphragm Gasket, Thru Hole Gasket, 416SS Orifice, 416SS/Nitrile Valve Plug, Seat O-ring Retainer and O-ring, Seat Machine Screw	971-P98-500
	302SS Diaphragm (2), Diaphragm Gasket, Thru Hole Gasket, 416SS Orifice, 416SS/M to M Valve Plug	971-P98-501
	302SS Diaphragm (2), Diaphragm Gasket, Thru Hole Gasket, 316SS Orifice, 316SS/M to M Valve Plug	971-P98-506
	302SS Diaphragm (2), Diaphragm Gasket, Thru Hole Gasket, 316SS Orifice, 316SS/Nitrile Valve Plug, Seat O-ring Retainer and O-ring, Seat Machine Screw	971-P98-528
Neoprene Diaphragm	Neoprene Diaphragm, Thru Hole Gasket, 416SS Orifice, 416SS/Nitrile Valve Plug, Seat O-ring Retainer and O-ring, Seat Machine Screw	971-P98-502
	Neoprene Diaphragm, Thru Hole Gasket, 416SS Orifice, 416SS/M to M Valve Plug	971-P98-503
	Neoprene Diaphragm, Thru Hole Gasket, 316SS Orifice, 316SS/M to M Valve Plug	971-P98-518
	Neoprene Diaphragm, Thru Hole Gasket, 316SS Orifice, 316SS/Nitrile Valve Plug, Seat O-ring Retainer and O-ring, Seat Machine Screw	971-P98-530

BelGAS™
A DIVISION OF MARSH BELLOFRAM

P39 Standard Gas Regulators

- Spare valve disks provided. Each unit comes with a 4 seat valve disk block. This block can be easily rotated 90˚ to provide a fresh valve disk sealing surface.
- Easily changed from tamper-resistant to T-handle adjustment or vice versa.
- Both adjustment assemblies are supplied with every unit.
- Brass casing material

The BelGAS P39 regulator selection is the largest of its type within the industry. We offer this regulator in three different materials, one of which will ideally suit your application AND your budget. ALL of the P39's are offered with six different spring ranges. Our broad selection of outlet pressure spring ranges allows more precise regulation of downstream pressure, hence, better process control. Piping designs can be simplified by using any one (or all) of the 3 outlet ports that come standard on the regulator. The BelGAS P39 is the ONLY regulator of this type, which has 3 outlet ports. To enhance the versatility of this regulator further, we provide you with a choice of seat materials that allows the designer to custom fit the seat material with the application.

Applications

- First cut of high-pressure natural gas to control valve supply
- Natural gas instrumentation columns
- First cuts to any downstream, low flow application, such as catalytic heaters, valve actuators, pressure controllers and chemical injection pumps

Specifications

Inlet	1/4 NPT	
Outlet	1/4 NPT (3 Ports)	
Vent	4 holes (5/32" each) (STD)	
	1/4 NPT (Tapped Vent Option)	
Max Inlet	6000 PSIG, 414 BAR	
Orifice Size	5/64"	
	Cv=0.10	
Outlet Ranges		
	0 – 30 PSIG	2.1 BAR
	0 – 60 PSIG	4.1 BAR
	0 – 120 PSIG	8.3 BAR
	0 – 150 PSIG	10.3 BAR
	0 – 225 PSIG	15.5 BAR
Temp. Range	–40˚F to 225˚F	–46˚C to 106˚C
Weight Approximate		
Standard	3-1/4 lbs	1.46 kg

Flow Charts

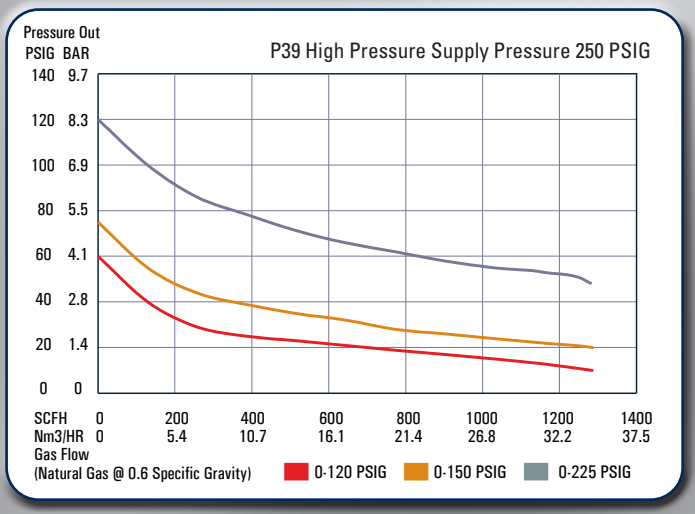

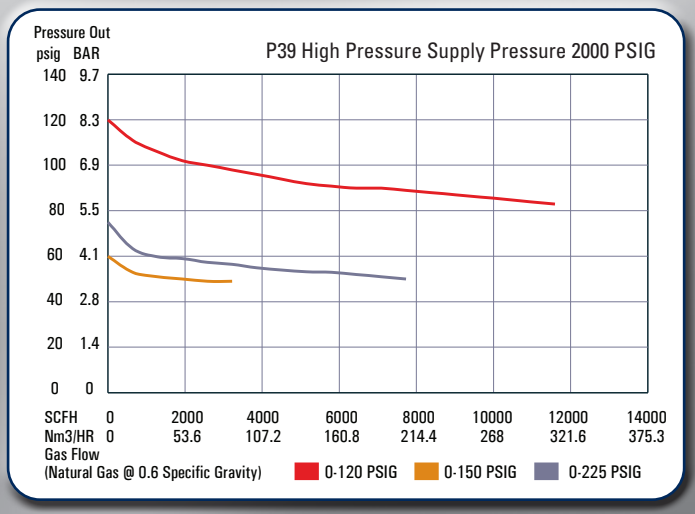

P39 Standard Part Matrix

P03902		0	X	0			0		
								Spring Range	
	030							0-30 PSIG	0-2.1 BAR
	060							0-60 PSIG	0-4.1 BAR
	120							0-120 PSIG	0-8.3 BAR
	150							0-150 PSIG	0-10.3 BAR
	225							0-225 PSIG	0-15.5 BAR
								Version	
		0						Standard	
								Adjustment Method	
			X					T-Bar and Adjustment Screw (Allen Head) with Tamper Resistant Cover	
								Vent	
				0				Standard Untapped Bonnet Vent	
								Seat Material	
					1			Nylon	
					3			Teflon	
								Port Configuration	
						0		Standard	
								Casing Material	
							0	Brass	

Materials of Construction

Brass Unit	
Body, Bonnet, Bottom Plug	Brass
Tamper Resistant Cover	Brass
Diaphragm	302 Stainless
Seals	TFE, Nitrile
Valve Spring	17-7PH Stainless Steel
Range Spring	Spring Steel, Chrome Silicon
Seat Material	Nylon or TFE

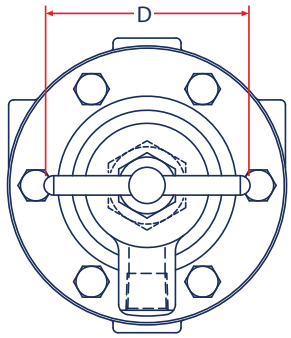

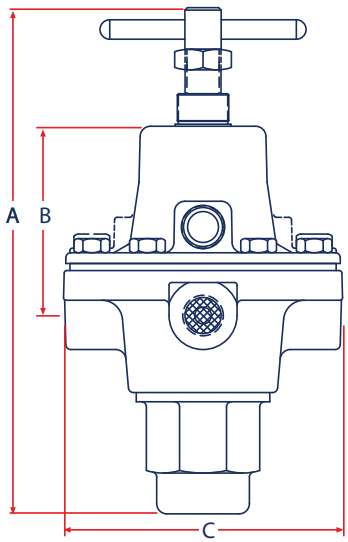

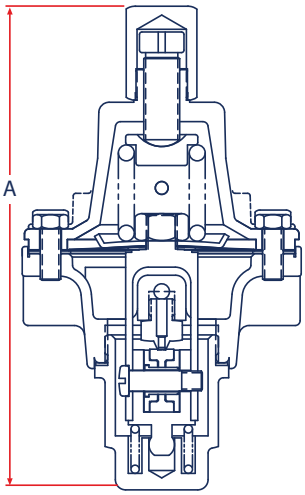

P39 Standard Dimensions

Dimensions Table		A	B	C	D
P39 w/T-Handle 0-30, 0-60, 0-120, 0-150, 0-225 PSIG range	mm	156	58	85	64
	inches	6.14	2.3	3.33	2.50
P39 w/Allen Head 0-30, 0-60, 0-120, 0-150, 0-225 PSIG range	mm	150	58	85	19
	inches	5.90	2.30	3.33	0.75

Ports

Standard

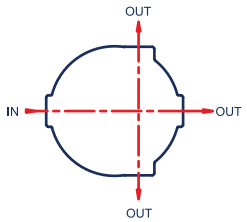

P39 Special Build Gas Regulators

BelGAS

Specials include these models:

- 500 PSI Outlet
- Dual Inlet Ports
- Nickel Plated and Stainless Steel
- Tapped Vent Models
  (Standard on all Stainless Steel units)
- Stainless Steel Version complies with NACE MR0175

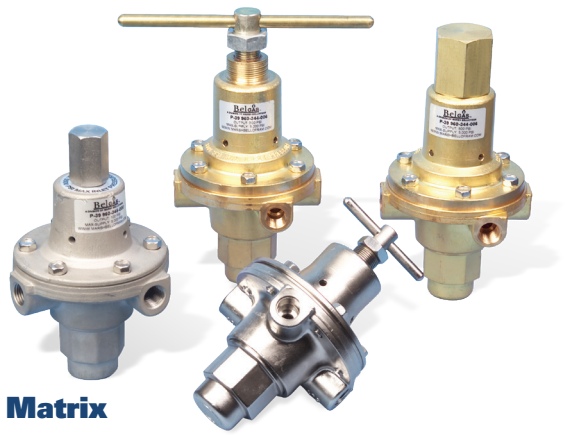

Applications

- First cut of high-pressure natural gas to control valve supply
- Natural gas instrumentation columns
- First cuts to any downstream, low flow application, such as catalytic heaters, valve actuators, pressure controllers and chemical injection pumps

P39 Special Build Part Matrix

P03902								
							Spring Range	
	030						0-30 PSIG 0-2.1 BAR	
	060						0-60 PSIG 0-4.1 BAR	
	120						0-120 PSIG 0-8.3 BAR	
	150						0-150 PSIG 0-10.3 BAR	
	225						0-225 PSIG 0-15.5 BAR	
	500						0-500 PSIG 0-34.5 BAR	
							Versions	
		0					Standard	*Not available in Stainless Steel
		3					PED (for EU)	
		4					ENVIRO-Cap* (Water Jacket)	
							Adjustment Method	
			0				T-Bar	
			1				Adjustment Screw (Allen Head) with Tamper Resistant Cover	
							Vent Options	*Not available in Brass or Nickel 500 PSIG units. Tapped vent is standard on all Stainless Steel units.
				0			Standard Bonnet	
				1			Tapped Vent Bonnet*	
							Seat Material	
					1		Nylon	*Nickel and Stainless Steel only
					3		Teflon (Brass units only)	
					4		PTFE*	
							Port Configuration	**Not available in Stainless Steel
						0	Standard	
						1	Dual Inlet**	
							Casing Material	
						0	Brass	
						1	Electroless Nickel	
						2	Stainless Steel	

Materials of Construction

Brass Unit	
Body, Bonnet, Bottom Plug	Brass
Tamper Resistant Cover	Brass
Diaphragm	302 Stainless
Seals	TFE, Nitrile
Valve Spring	17-7PH Stainless Steel
Range Spring	Spring Steel, Chrome Silicon
Seat Material	Nylon or TFE
Nickel Plated Unit	
Body, Bonnet, Bottom Plug	Nickel Plated Brass
Tamper Resistant Cover	Nickel Plated Brass
Diaphragm	302 Stainless Steel
Seals	TFE, Nitrile
Valve Spring	17-7PH Stainless Steel (Nickel Plated)
Range Spring	Spring Steel or Chrome Silicon
Seat Material	Nylon or PTFE (316 SS Block)
Stainless Steel Unit	
Body, Bonnet, Bottom Plug	316 Stainless Steel
Tamper Resistant Cover	316 Stainless Steel
Diaphragm	Monel 400
Seals	TFE, Neoprene
Valve Spring	MP35N (UNS30035)
Range Spring	Spring Steel
Seat Material	Nylon or PTFE (316 SS block)
Only the P39SS Conforms to NACE MR0175	

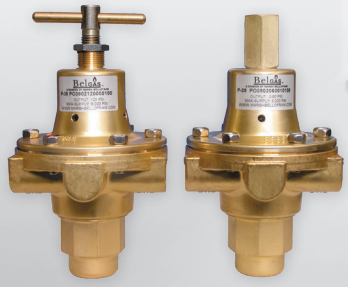

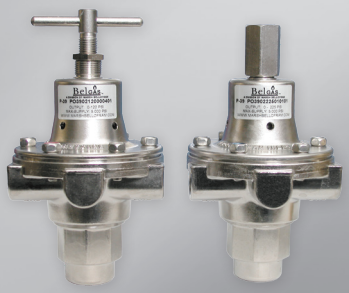

Specifications

Inlet	1/4 NPT	
Outlet	1/4 NPT (3 Ports)	
Vent	4 holes (5/32" each) (STD)	
	1/4 NPT (Tapped Vent Option)	
Max Inlet	6000 PSIG, 414 BAR	
Orifice Size	5/64"	
Outlet Ranges		
	0 – 30 PSIG	2.1 BAR
	0 – 60 PSIG	4.1 BAR
	0 – 120 PSIG	8.3 BAR
	0 – 150 PSIG	10.3 BAR
	0 – 225 PSIG	15.5 BAR
	0 – 500 PSIG	34.5 BAR
Temp. Range	–40˚F to 225˚F	–46˚C to 106˚C
Weight Approximate		
Standard	3-1/4 lbs	1.46 kg
500 PSIG	3-3/4 lbs	1.69 kg
	Cv=0.10	

Ports

Standard	Dual Inlet
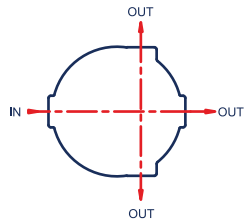	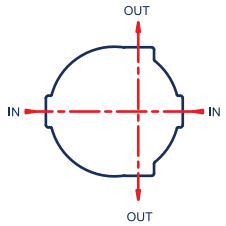

P39 Special Build Gas Dimensions

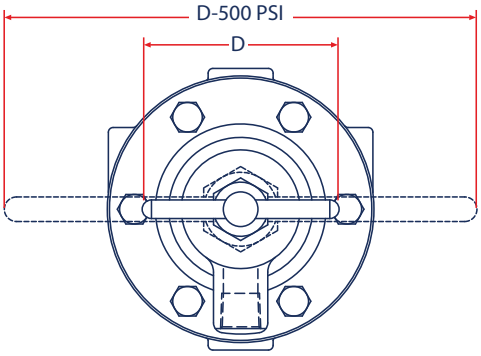

Dimensions Table		A	B	C	D
P39 w/T-Handle 0-30, 0-60, 0-120, 0-150, 0-225 PSIG range	mm	156	58	85	64
	inches	6.14	2.3	3.33	2.50
P39 w/Allen Head 0-30, 0-60, 0-120, 0-150, 0-225 PSIG range	mm	150	58	85	19
	inches	5.90	2.30	3.33	0.75
P39 w/T-Handle 0-500 PSIG range	mm	177	75	85	152
	inches	6.98	2.96	3.33	6.0
P39 w/Allen Head 0-500 PSIG range	mm	172	75	85	32
	inches	6.78	2.96	3.33	1.25

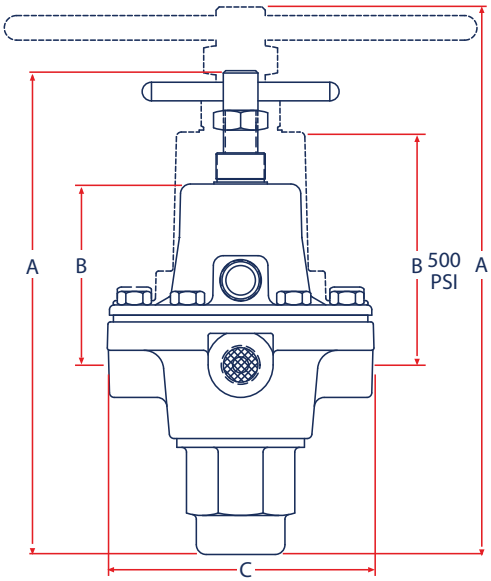

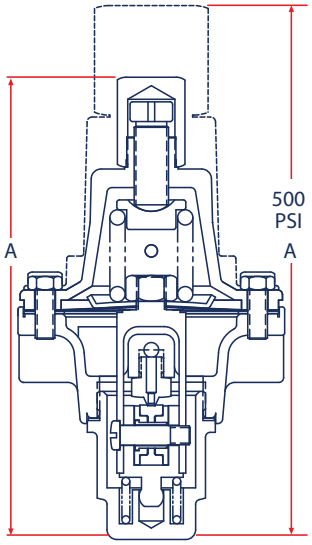

P1367 Manifold System

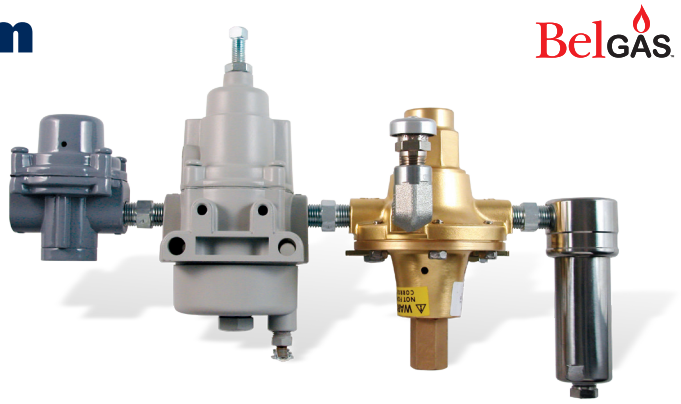

Hi/Lo Pressure Instrument Supply Manifold System with Safety Relief Valve Protection.

P1367 pneumatic supply pressure manifold offers the customer a complete package for working pressures up to 4000 psig (276 bar.)

Features

- Hi-Lo Gas Pressure Regulation
- Inlet and Outlet Gas Filtration
- Overpressure Safety Protection
- Two connection hook-up
- Installation Flexibility
- NACE Capability

P136702					00	
						Output Pressure Setting
	020					20 PSIG Setpoint
	035					35 PSIG Setpoint
						Mounting Bracket
		C				Casing Mounting Bracket
		Y				Yoke Mounting Bracket
						Filter Drain
			P			Plug
			V			Manual Drain Valve
						Construction
				S		Standard
				N		NACE
					00	

Specifications

Port Sizes	Inlet and Outlet	1/4 NPT
	P800 Vent	1/2 NPT with Removable Screen
Max Inlet Pressure	4000 PSIG – Stainless Steel	275 BAR
	2150 PSIG – Aluminum	148 BAR
Temperature Range	-20˚to + 160˚F	-29˚ to +66˚C

Manifold includes the following items:		
1	**P350** Stainless Steel or Aluminum Body, filter, SST drain. Available with a Plugged Drain Port or Manual Drain Valve	
2	**P39** First-stage high pressure regulator with mounting bracket.	
3	High pressure relief valve, attached to P39 regulator with pipe elbow. Preset to 150 PSIG (10.3 BAR)	
4	**P50** Second-stage low pressure filter regulator, nipple-mounted in outlet of the P39 regulator.	
5	**P800** Relief valve, nipple mounted in the outlet of the P50 regulator. Preset to 41 PSIG (2.83 BAR)	

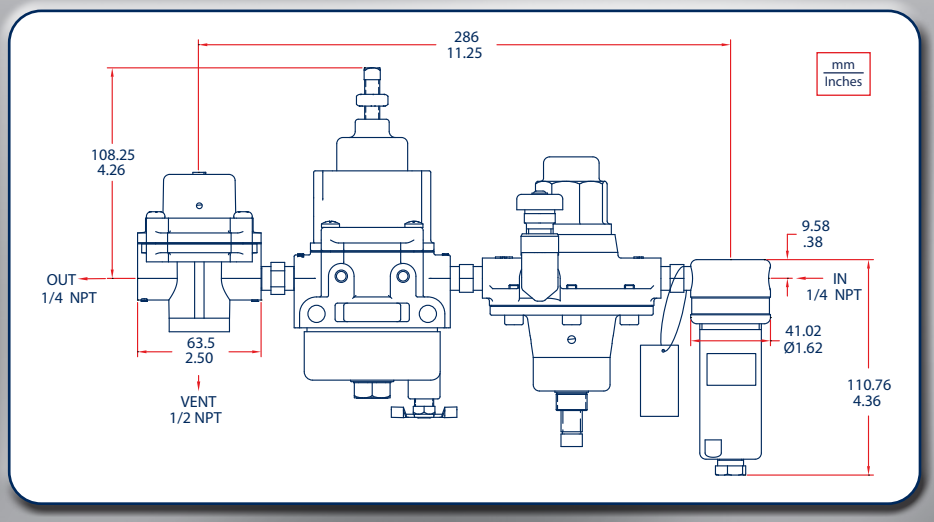

Replacement Parts	Part Number
Yoke Mounting Bracket	607-304-000
Casing Mounting Bracket	607-305-000

P350 Filter

Excellent Filtration

The element is made from high efficiency glass microfiber with high grade 316SS end caps.

Stainless Steel Filter complies with NACE MR0175 for sulfide stress cracking resistant metallic material for oil field equipment.

Maintenance

A tight seal is guaranteed by the use of a thread element connection. The filter housing and element have been polished and degreased. No special lubricants are needed in the field for replacing the element.

The element is threaded into the housing so there is no need for extra parts during installation or maintenance of the filter. There is no chance of losing top or bottom seals or rings required for installation.

Applications

- Filtering Supply Gas
- Filtering Air Supply

P350 Part Matrix

P3500200000				
				Drain Option
	P			Drain Plug
	V			Manual Drain Valve
				Filter Option
		25		
		01		1 Micron
		05		5 Micron
		50		50 Micron
				Material
			0	Stainless Steel
			1	Aluminum

P350 Replacement Filter Elements

25 Micron	971-350-000
1 Micron	971-350-001
5 Micron	971-350-002
50 Micron	971-350-003

Flow Rates

Body Size	Pressure Differential	SCFM
1/4 NPT	5 PSIG	19 SCFM
	10 PSIG	27 SCFM
	20 PSIG	40 SCFM

Specifications

Body Size	1/4 NPT	
Max Operating Pressure	Aluminum	2150 PSIG
	Stainless Steel	5000 PSIG
Max Operating Temperature	248˚ F	120˚ C
Drain Valve Assemble Options	Plugged Drain Port	
	Manual Drain Valve	
Weight Approximate		
Aluminum	0.5 lb	0.22 kg
Stainless Steel	1.1 lb	0.5 kg
Materials of Construction		
Body,	Stainless Steel (NACE) Construction or Aluminum	
Filter	25 Micron Glass Microfiber (Standard)	
	Stainless Filter End Caps	

P350 Dimensions

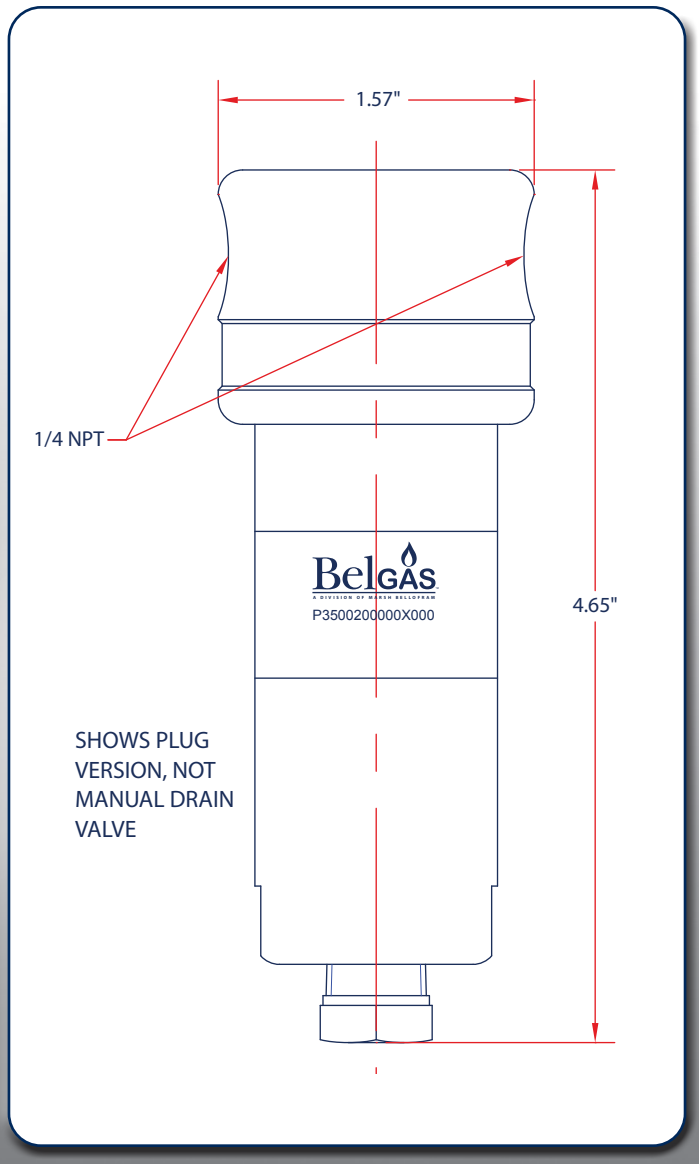

P800 Relief Valve

The 800 is a direct operating, in-line, factory preset relief valve for use in pneumatic applications that warrant protection from over pressurization. The P800 is used primarily between a pneumatic instrument and a supply regulator to limit the instrument supply pressure to 50 PSIG in the case of a supply regulator failure.

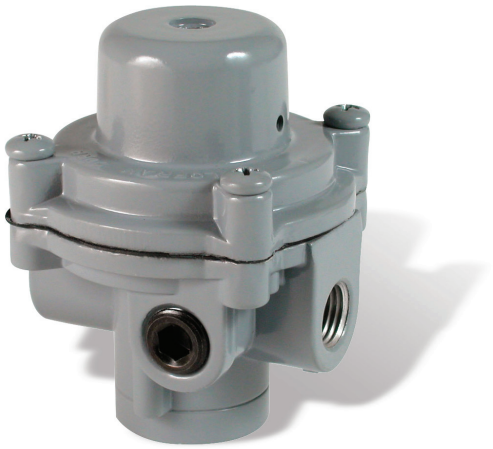

Applications

- Instrument air supply
- Rolling diaphragm for enhanced accuracy
- Tamper resistant spring case

P800 Part Matrix

P80002		000000	
	↑		Output Pressure Setting
	xxx		Enter Pressure in PSIG setting Desired Minimum 2 PSIG (002) Maximum 50 PSIG (050)
		000000	

Specifications

Non-rising Adjustment Assembly		
Large 0.344 Relief Seat Diameter		
Large Diaphragm Area		
1/4 NPT Ports		
Factory Preset	Plugged and Tamper Resistant	
1/2 NPT Tapped Vent		
Weight Approximate		
	0.56 lb	0.25 kg
Temperature Range		
	20˚ to 150˚F	-29˚to 66˚C

Accessories

	Part Number
Mounting Bracket	607-000-057

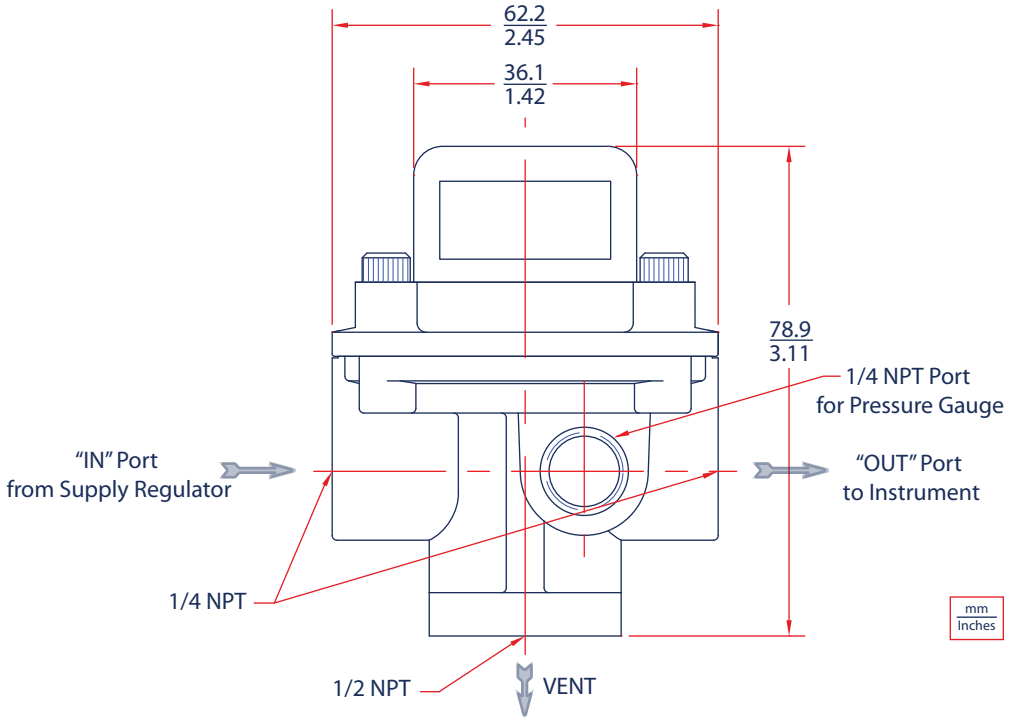

P50 & P50 NACE Filter Regulators

- Superior Regulation Characteristics
- Rugged, Corrosion-Resistant Construction
- Excellent Stability and Repeatability
- Integral, 40 micron, Self Cleaning Filter
- Self-Relieving
- Standard Tapped Vent
- Soft Relief Seat on P50
- Several Mounting Options

The BelGAS General Purpose P50 & P50 NACE Filter Regulators are reliable precision units designed for instrumentation and general purpose use in both standard environments (P50), and corrosive environments (P50 NACE). The P50 NACE complies with NACE material requirement MR0175 for sulfide stress cracking resistant metallic material for oil field equipment.

These BelGAS regulators are generally superior in regulated pressure vs. flow, forward-to-reverse flow offset, supply pressure sensitivity, repeatability and stability.

Ruggedly designed and constructed, the regulators have housings of diecast aluminum. The P50 Regulator is finished with vinyl paint (which resists scratching, weathering & other physical abuse), while the P50 NACE is finished with epoxy paint and includes a vent cap for added protection. Both models are pressure and leak tested prior to shipment from the factory.

The full flow gauge port is convenient for gauge installation and can also be used as an additional full flow outlet. The P50 regulators include a unique self-cleaning 40 micron nylon mesh filter (316 stainless steel in the P50 NACE) that can be easily removed.

The P50 NACE is available for use in corrosive environments. This complies with NACE material requirement MR0175 for sulfide stress cracking resistant metallic material for oil field equipment.

Applications

The design of these regulators is especially well suited to pilot-operated level, pressure and flow controllers and instruments, as well as applications such as air chucks, air spray guns, air cylinders and actuators, and a wide range of industrial pneumatic systems and equipment.

P50 Part Matrix

P050		02				0	0		
								Versions	
	0							Standard	
	N							NACE	
		02							
								Output Range	
			010					0-10 PSIG*	*Not available in NACE
			035					0-35 PSIG	
			060					0-60 PSIG	
			120					0-120 PSIG	
								Options	
				00				Standard	*P50 standard version only
				0B				Non-relieving	
				0F				5 Micron Filter	
				0K				Knob*	
				BF				Non-relieving & 5 M Filter	
				BK				Non-relieving & Knob*	
				CD				Non-relieving, 5 M Filter & Knob*	
								Accessories	
					0			None	
					G			Gauge	
						0	0		

Materials of Construction

	P50 Filter Regulator	P50 NACE Filter Regulator
Body	Diecast aluminum with vinyl paint	Diecast aluminum with epoxy paint
Adjusting Screw	Plated steel	Stainless steel
Trim	Plated steel, brass, acetal resin	Stainless steel, Neoprene, Fluoroelastomer
Diaphragm	Buna-N elastomer with polyester fabric	Fluoroelastomer with Polyester Fabric
Knob	Phenolic plastic (option)	
Spring	Music wire	Inconel

Non-relieving

Used in applications where it is desirable to relieve pressure downstream of the regulator, for some constant flow applications, and where the gas flowing through the regulator must not escape at the regulator. Non-relieving regulators should not be used for low or no flow applications.

5 Micron Filter

Replaces the 40 micron filter supplied with the standard P50 for more complete air filtration.

The standard P50 will have a tapped vent, vinyl paint, 40 micron filter and low bleed. The standard P50N will have a tapped vent, epoxy paint, 40 micron filter and standard bleed.

P50 Rebuild Kits

	Kit Includes	Part Number
P50	Includes: Dripwell gasket, pintle spring, washer, filter, diaphragm assemble, seat assembly.	971-177-000

P50 & P50 Nace Specifications

	P50 Filter Regulator	P50 NACE Filter Regulator
Sensitivity	1" (25.4 mm) Water Column	1" (25.4 mm) Water Column
Flow Capacity	20 SCFM (565 LPM)	18 SCFM (510 LPM)
Effect of Supply Pressure variation (25 PSIG) on Outlet Pressure	<0.2 PSIG (0.01 BAR)	<0.2 PSIG (0.01 BAR)
Exhaust Capacity (5 PSIG above 20 PSIG set point)	0.1–0.45 SCFM Typical (2.8–12.7 LPM)	0.1–0.45 SCFM Typical (2.8–12.7 LPM)
Maximum Input/Supply Pressure	250 PSIG (17.2 BAR)	250 PSIG (17.2 BAR)
Maximum Emergency Outlet Pressure	150 PSIG	150 PSIG
Effect of Changes in Flow on Regulated Pressure (100 PSIG/6.9 BAR Supply)	4 PSIG (0.3 BAR) over flow 10 SCFM (283 LPM) (1⁄4 NPT, 20 PSIG / 1.4 BAR set point)	5 PSIG (0.3 BAR) over flow 10 SCFM (283 LPM) (1⁄4 NPT, 20 PSIG / 1.4 BAR set point)
Output Pressure Ranges	0-10 PSIG (0-0,7 BAR) 0-35 PSIG (0-2.4 BAR) 0-60 PSIG (0-4.1 BAR), 0-120 PSIG (0-8.3 BAR)	0-35 PSIG (0-2.4 BAR) 0-60 PSIG (0-4.1 BAR), 0-120 PSIG (0-8.3 BAR)
Temperature Range	0 to 160˚F (-18 to 71˚C)	-20 to 180º F (-29 to 82˚C)
Total Air Consumption @ Maximum Output	0.1 SCFH (0.05 LPM)	6 SCFH (2.8 LPM)
Port Size	1⁄4 NPT	1⁄4 NPT
Size	3.19" X 3.19" X 7.25" (81 X 81 X 184 mm)	3.19" X 3.19" X 7.25" (81 X 81 X 184 mm)
Weight	1.81 lb (0.8 kg)	1.81 lb (0.8 kg)
Mounting	Pipe, Panel, Bracket or Thru Body Holes	Pipe, Panel, Bracket or Thru Body Holes

P50 & P50 Nace Dimensions

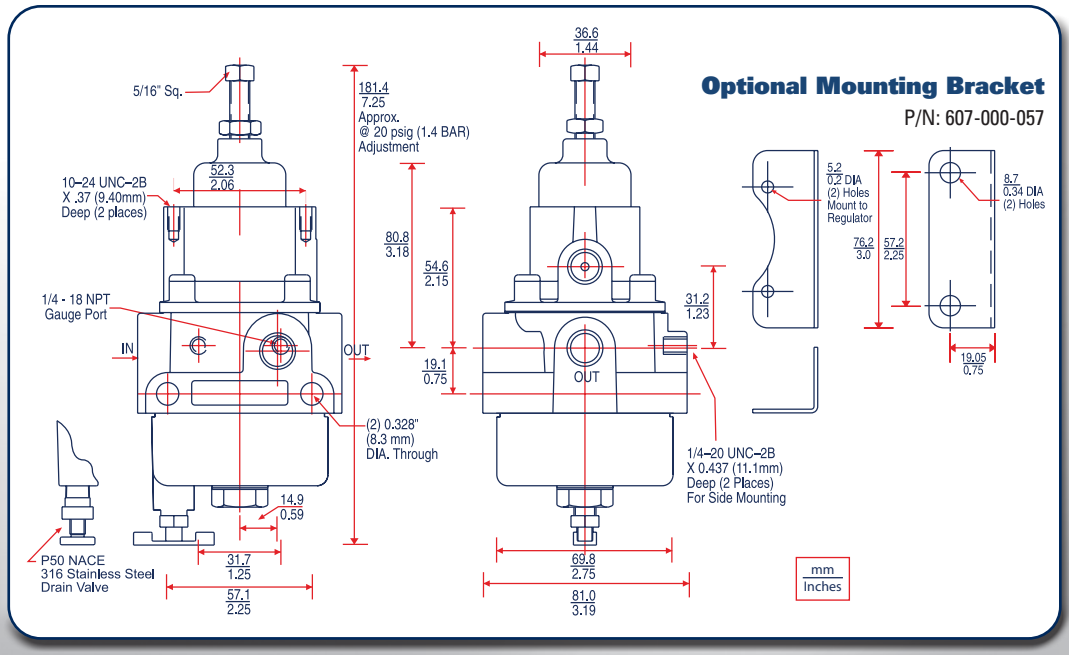

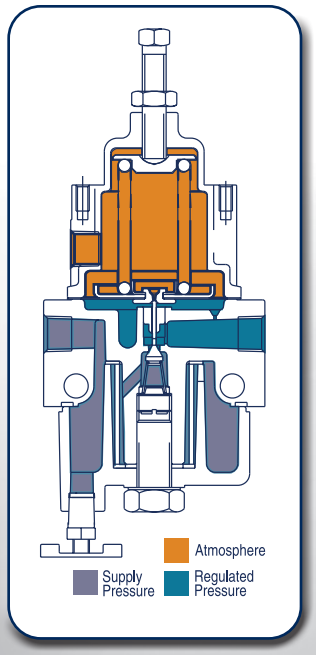

P50 Regulated Pressure vs. Flow

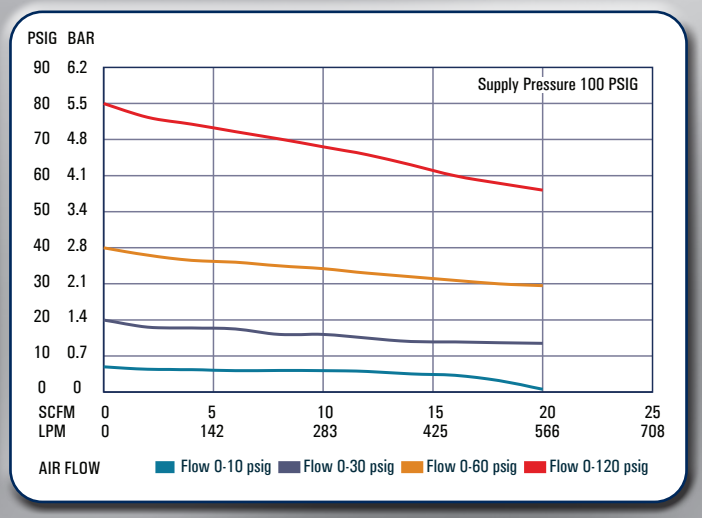

P50 NACE Regulated Pressure vs. Flow

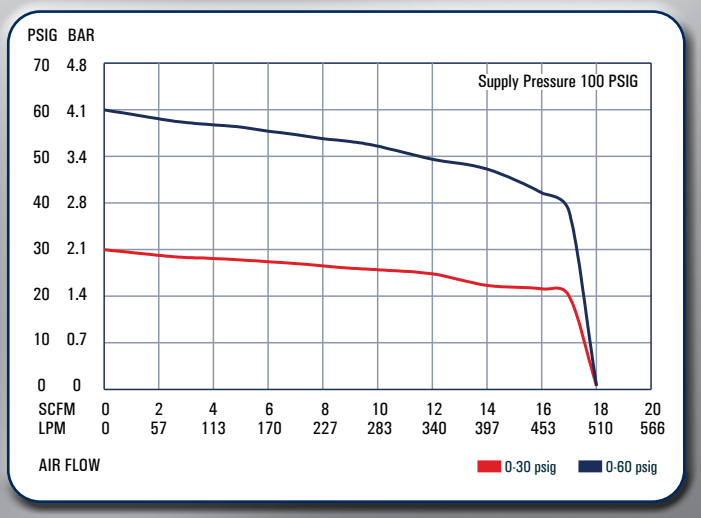

P52 Stainless Steel Regulator and Filter/Regulator

Features

- Low Droop
- Tapped Vent
- Excellent Stability
- Port Sizes from 1/4" up to 1"

Applications

- Sour Gas
- Corrosive Environments
- Off Shore

The P52SS regulator is designed for service with a wide variety of corrosive gases and severe environments. It is the ideal choice for sour gas applications and where a corrosive environment is present.

The standard version of this regulator is relieving with no constant bleed. You must specify if a non-relieving regulator is required.

Key components to the filter / regulator include a built in dripwell, 25 micron stainless filter. Both the regulator and filter / regulator come standard with Viton elastomers and a 'T' handle adjustment.

P52SS Part Matrix

P052SS					
					Style
	RX				Regulator
	FR				Filter Regulator with Manual Drain
	AR				Filter Reg with Auto Drain
					Body Size
		02			1/4 NPT
		03			3/8 NPT
		04			1/2 NPT
		06			3/4 NPT
		08			1 NPT
					Output Ranges
			030		3 - 30 PSIG
			060		6 - 60 PSIG
			125		12 - 125 PSIG
			150		15 - 150 PSIG
					Options
				00	Standard
				0B	Non-relieving
				0F	5 Micron Filter
				BF	Non-relieving & 5 Micron Filter
				OH	Hex Head Adjustment
				BH	Non-relieving Hex Head Adjustment
				FH	5 Micron Filter and Hex Head
				CC	Non-relieving Hex Head and 5 Micron Filter

Specifications

Maximum Inlet Pressure	425 PSIG
Outlet Ranges	3 - 30 PSIG
	6 - 60 PSIG
	12 - 125 PSIG
	15 - 150 PSIG
Repeatability	± 0.25 PSIG
Flow Rates at 100 PSIG Inlet 20 PSIG Outlet	1/4" - 38 SCFM
	3/8" - 42 SCFM
	1/2" - 95 SCFM
	3/4" - 105 SCFM
	1" - 105 SCFM
Temperature Range	-4 to 176˚F
Exhaust Capacity	0.1 SCFM
Max Air Consumption	0.5 SCFH
Filter	25 Micron
Supply Pressure Sensitivity at 25 PSIG	± 1.0 PSIG Change in Output
Material	316 SS Housing Body and Filter, Viton Elastomers

Mounting Bracket

607-309-000

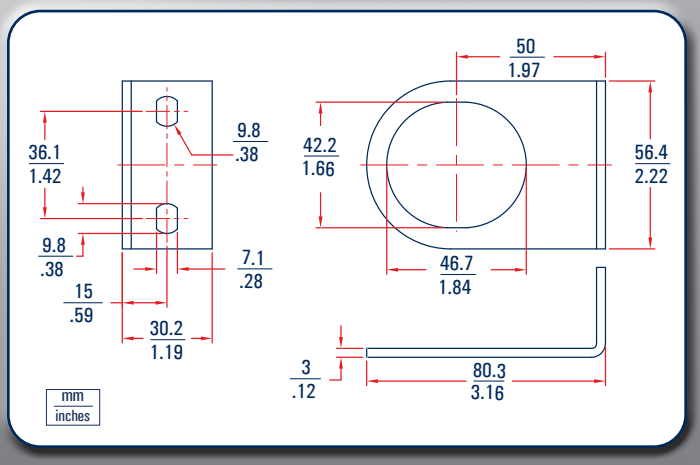

P52 Stainless Steel Dimensions

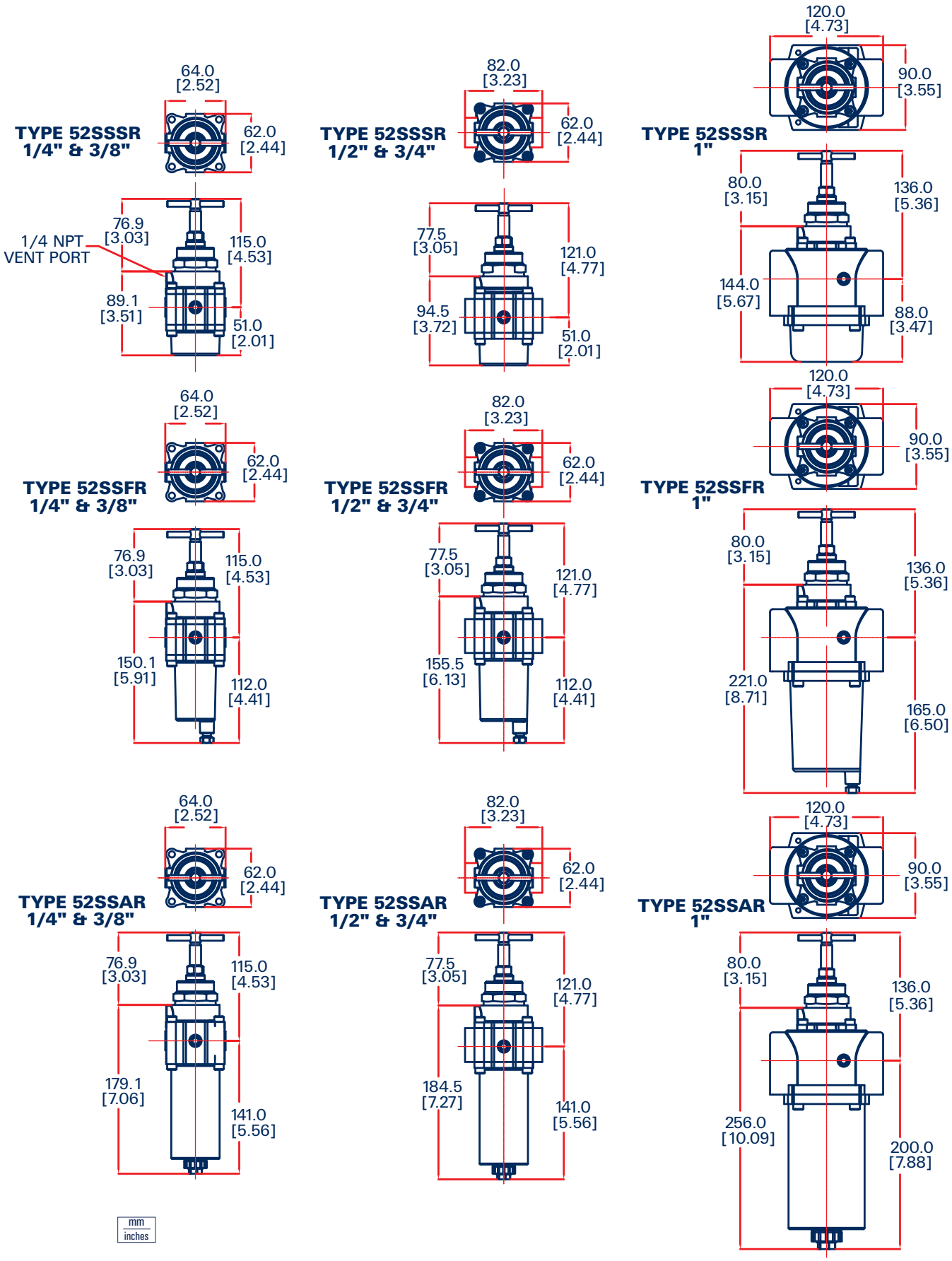

F289 Pilot Regulator

The PL82 is designed for the P1808 and P289 Back Pressure/Relief regulators.

The PL82B is used in pressure relief applications and vents continuously when the main valve is re-positioned or in the relieving mode. The PL82B does not bleed/relieve with pressures below the set pressure.

The PL83 is a low pressure unit for the inches of water column spring ranges of the 2" F289 and is a high bleed restriction pilot.

The gain options of low, medium and high allow for the lowest build ups and fastest response speed - high gain being the fastest.

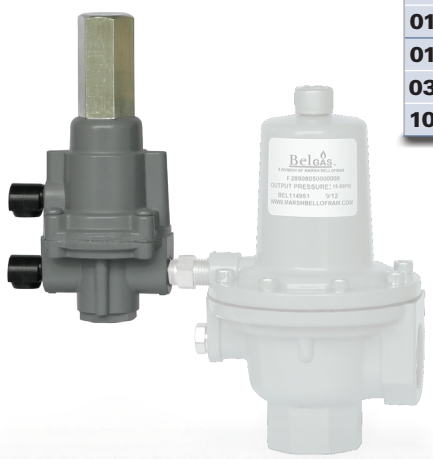

F289 Pilot Matrix

PL			02				0	
								Version
	82							For PSIG Ranges
	83							For WC Ranges
								Configuration
		B						Relief Device
								Spring Range - WC or PSI / BAR
				002	For 2" P289			14"-2 / 0.03-0.13
				010				2-10 / 0.13-0.69
				018	For 1" 289			10-18 / 0.7-1.3
				030				18-30 / 1.3-2.1
				100				30-100 / 2.1-7.0
								Bleed Restrictions
					L			Low Gain
					S			Standard Gain
					H			High Gain
								Trim
						0		Nirile (NBR)
						2		Fluorocarbon (FKM)
								Body Material
							0	Aluminum

P1808 Pilot Regulator

The PL82 is designed for the P1808 and P289 Back Pressure/Relief regulators.

The PL82B is used in pressure relief applications and vents continuously when the main valve is re-positioned or in the relieving mode. The PL82B does not bleed/relieve with pressures below the set pressure.

The PL82 is a low bleed pilot for back pressure regulator applications and will only exhaust when the valve is being repositioned.

The gain options of low, medium and high allow for the lowest build ups and fastest response speed - high gain being the fastest.

P1808 Pilot Matrix

PL			02				0	
								Version
	82							PSI Units
								Configuration
		0						Back Pressure Regulator
		B						Relief Device
								Spring Range - PSI / BAR
				018				3-18 / 0.21-1.3
				040				15-40 / 1.0-2.75
				125				35-125 / 2.4-8.6
								Bleed Restrictions
					0			No Bleed (Back Pressure Reg)
					L			Low Gain
					S			Standard Gain
					H			High Gain
								Trim
						0		Nirile (NBR)
						2		Fluorocarbon (FKM)
								Body Material
							0	Aluminum

F627 Pilot Regulator

The PL81 is designed as a pilot for High Flow regulators when accuracy and speed is desirable. The PL81 is used in conjunction with the range spring to acieve faster correction response and a more accurate adjustment of the pressure setting. The PL81 is a constant bleed pilot regulator.

The gain options of low, medium and high allow for the lowest build ups and fastest response speed - high gain being the fastest.

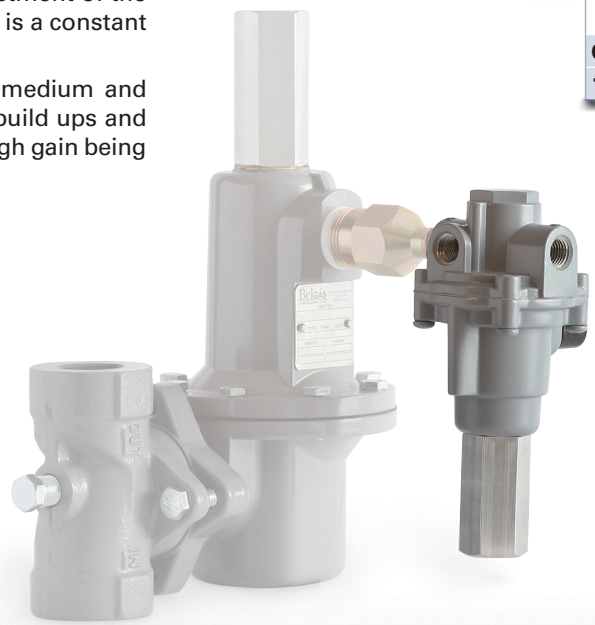

F627 Pilot Matrix

PL		002				0	
							Version
	81						PSI Units
							Spring Range - WC or PSI / BAR
			035				0-35 / 0.0-2.4
			100				35-100 / 2.4-6.9
							Bleed Restrictions
				L			Low Gain
				S			Standard Gain
				H			High Gain
							Trim
					0		Nirile (NBR)
					2		Fluorocarbon (FKM)
							Body Material
						0	Aluminum

PL81 Dimensions

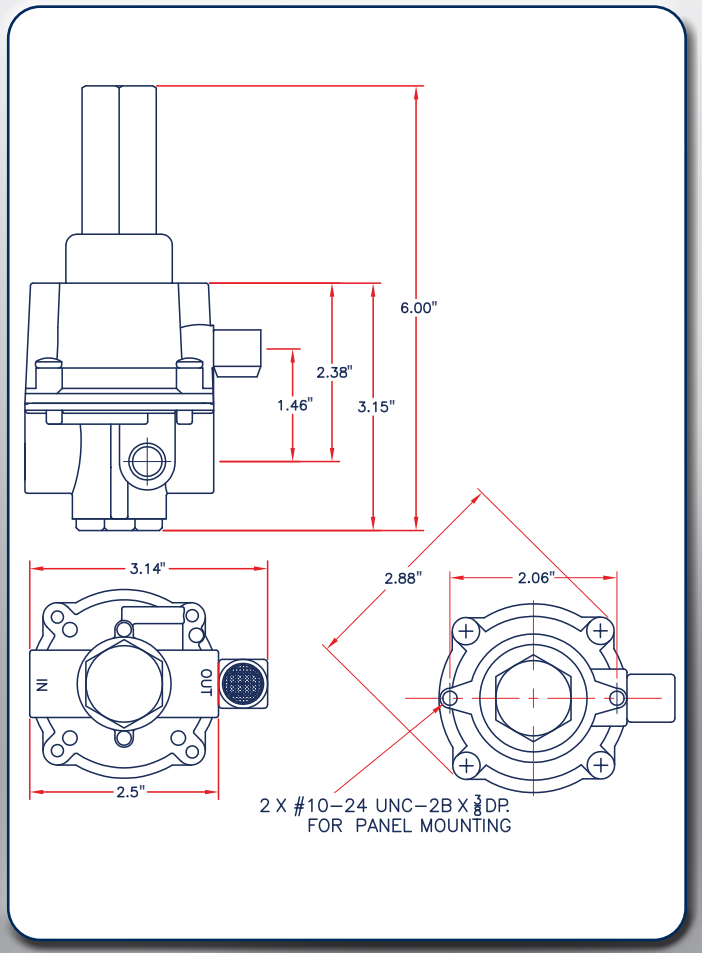

PL82 Dimensions

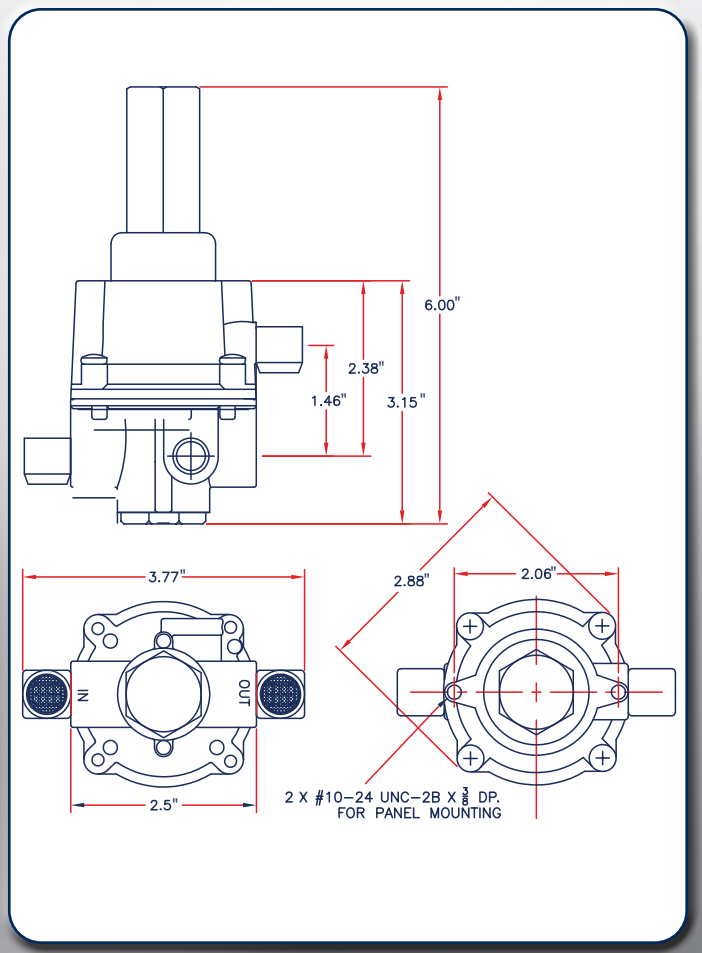

F300 Pilot Regulators

The PL84 is designed as a pilot for medium and small commercial sized regulators when improved accuracy is desirable. The PL84 is equipped with a convoluted diaphragm to increase sensitivity. The PL84 is a constant bleed regulator available in low, medium, and high gain to modify the response time and build up pressures.

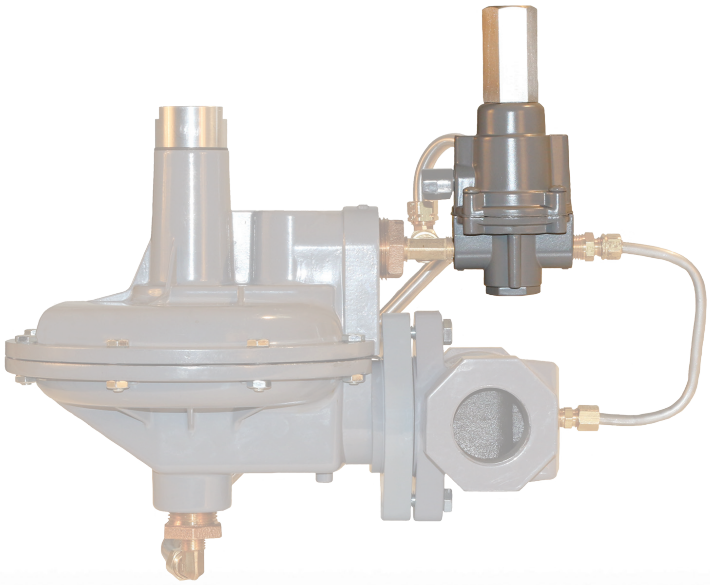

F300 Pilot Part Matrix

PL		002				0	
							Version
	84						PSI & WC Units
							Spring Range - WC or PSI / BAR
			010				2-10 PSI / 0.13-0.69
			020				2 - 20 PSI / 0.13 -1.38
							Bleed Restrictions
				L			Low Gain
				S			Standard Gain
				H			High Gain
							Trim
					0		Nirile (NBR)
					2		Fluorocarbon (FKM)
							Body Material
						0	Aluminum

F200 Pilot Regulators

The PL84 is designed as a pilot for medium and small commercial sized regulators when improved accuracy is desirable. The PL84 is equipped with a convoluted diaphragm to increase sensitivity. The PL84 is a constant bleed regulator available in low, medium, and high gain to modify the response time and build up pressures.

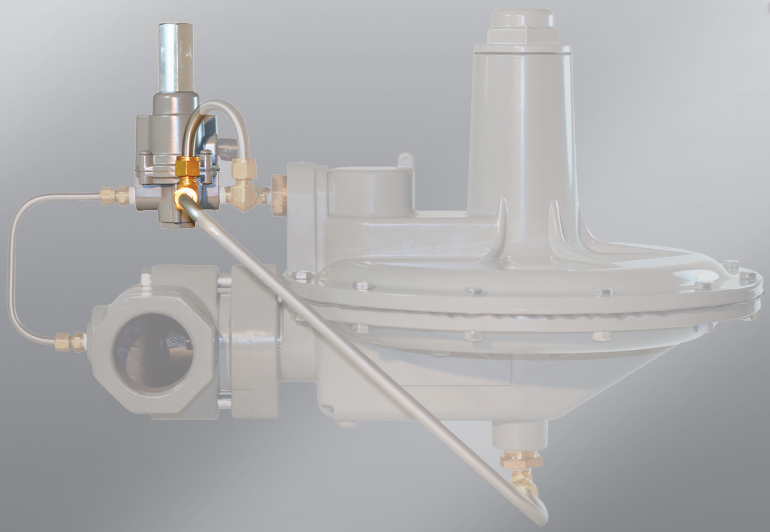

F200 Pilot Part Matrix

PL		002				0	
							Version
	84						PSI & WC Units
							Spring Range - WC or PSI / BAR
			014				4-14" WC / .009-0.03
			002				14"-2 PSI / 0.03-0.13
			010				2-10 PSI / 0.13-0.69
							Bleed Restrictions
				L			Low Gain
				S			Standard Gain
				H			High Gain
							Trim
					0		Nirile (NBR)
					2		Fluorocarbon (FKM)
							Body Material
						0	Aluminum

Pilot Regulator Filters

The PL Pilot Regulators can be adapted to many of the BelGAS pressure regulators. Although most main regulators are in some way modified to accept a pilot regulator operation, the BelGAS Pilot regulators can be used on other pressure regulators designed for the use of a pilot regulator.

In any application where a smaller flow rate due to a smaller orifice, medium filtration is the key to a smooth and trouble free operation of the pilot regulator. Filtration of the pilot supply is always recommended.

P350 Filter Assemblies

Stainless and Aluminum cartridge type filters can be mounted in line before the pilot inlet.

P3500200000				
				Drain Options
	P			Drain Plug
	V			Manual Drain Valve
				Filter Options
		25		25 Micron (Standard)
		01		1 Micron
		05		5 Micron
		50		50 Micron
				Body Material
			0	Stainless Steel
			1	Aluminium

P590 In-Line Filter Assembly

Brass and stainless steel inline filter designed for use with multiple pilot regulators and main regulators.

P590 Complete Filter / Brass	P594
P590 Complete Filter / Stainless	P595
P590 25 Micron Element	677-052-000

P590 Dimensions

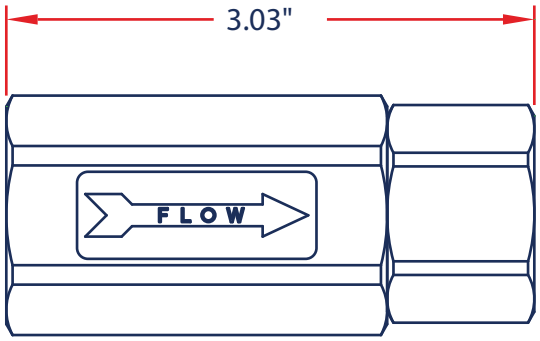

P912 Pressure Regulator

- Versatile
- Control Accuracy
- Compact Design
- Removable Vent Screen

The Type P912 pressure regulator functions as a pneumatic pressure controlling device with an adjustable set point. The P912 can be used in a variety of applications in which accurate pressure regulation is required. The internal relief feature allows the regulator to respond quickly and to relieve excessive pressure.

Applications

Applicable to a wide range of gaseous fluids, including air, natural gas and propane. Can be used as a LP regulator.

Specifications

	P912		
Inlet	1/4 NPT		
Outlet	1/4 or 3/8 NPT		
Temperature Range	-20 to 170 °F (-29° to 77°C)		
Outlet Pressure Ranges	3-7 inches WC	7 to 17 mBAR	
	5-10 inches WC	12 to 25 mBAR	
	9.25-13 inches WC	23 to 32 mBAR	U.L. 144 Listed
	10 inches WC-1.05 PSIG	25 to 72 mBAR	
	0.8-2.7 PSIG	55-186 mBAR	U.L. 144 Listed
	2.7-5 PSIG	186-340 mBAR	U.L. 144 Listed
Maximum allowable inlet pressure	250 PSIG (17.3 BAR)		
Approximate Weight	1.3 lbs.	0.59 kg	

Materials of Construction

	P912
Body, Bonnet	Zinc
Diaphragm	Nitrile
Diaphragm Assembly	Zinc/Nitrile
Gaskets	Non-asbestos, CGR 2750
Pin	Stainless Steel
Vent screen	Monel
Spring	Zinc-Plated Steel
Diaphragm Piston	Zinc-Plated Steel

Output Pressure Settings	Outlet Pressure Setting	Spring Part Number	Offset	Capacity in SCFH (m3/h) of 0.6 Specific Gravity Natural Gas								
				Inlet Pressure, PSIG/BAR								
				5	10	25	50	75	100	150	200	250
				0.34	0.69	1.7	3.4	5.2	6.9	10	14	17
5 inches WC	3 to 7 inches WC	655-681-000	1 inch WC	50	65	75	100					
12 mBAR	7 to 17 mBAR		2.5 mBAR	1.34	1.74	2.01	2.68					
7 inches WC	5 to 10 inches WC	655-682-000	1 inch WC		75	112	155	155	155	155	155	
17 mBAR	12 to 25 mBAR		2.5 mBAR		2.01	3.0	4.15	4.15	4.15	4.15	4.15	
11 inches WC	9-1/4 to 13 inches WC	655-683-000	1 inch WC		75	140	155	155	155	155	155	155
27 mBAR	23 to 32 mBAR		2.5 mBAR		2.01	3.75	4.15	4.15	4.15	4.15	4.15	4.15
15 inches WC	10 inches WC to 1.05 PSIG	655-684-000	2 inch WC		68	100	135	150	160	190	200	200
27 mBAR	25 to 72 mBAR		5 mBAR		1.82	2.68	3.62	4.02	4.29	5.09	5.36	5.36
1 psig	0.8 to 2.7 psig	655-695-000	10%		40	40	85	90	100	155	160	185
					1.47	1.07	2.28	2.41	2.68	4.15	4.29	4.96
69 mBAR	55 to 186 mBAR		20%		55	100	135	155	185	240	285	300
					1.47	2.68	3.62	4.15	4.96	6.43	7.64	8.04
2 psig	0.8 to 2.7 psig	655-695-000	10%		50	85	105	130	145	200	260	300
					1.34	2.28	2.81	3.48	3.89	5.36	6.97	8.04
140 mBAR	55 to 186 mBAR		20%		70	120	180	240	300	400	450	500
					1.88	3.22	4.82	6.43	8.04	10.7	12.1	13.4
5 psig	2.7 to 5 psig	655-696-000	10%		68	85	135	170	200	325	400	500
					1.82	2.28	3.62	4.56	5.36	8.71	10.7	13.4
340 mBAR	186 to 340 mBAR		20%		75	135	200	280	360	560	685	750
					2.01	3.62	5.36	7.50	9.65	15.0	18.4	20.1

P912 Part Matrix

P912			1	0	0	0	0	0	
									Outlet Port Size
	02								1/4
	03								3/8
									Output Pressure
		020							3" - 7" WC
		040							5" - 10" WC
		060							9.25" - 13" WC
		080							10" WC-1.05 PSIG
		100							0.8 - 2.7 PSIG
		120							2.7 - 5 PSIG
			1	0	0	0	0	0	

P912 Regulator Rebuild Kits

For Spring Ranges	Kit Includes	Part No.
3 - 7 " WC & 5 - 10 " WC	Arm Assembly, CRG Gasket. Monel Screen, Nitrile Diaphragm	971-912-200
9.25 - 13 " WC & 10 " WC - 1.05 psig	Arm Assembly, CRG Gasket. Monel Screen, Nitrile Diaphragm	971-912-100
0.8 - 2.7 psig & 2.7 - 5 psig	Arm Assembly, CRG Gasket. Monel Screen, Nitrile Diaphragm	971-912-000

P912 Parts

Item	Description		Part Number
1	Body	3/8 NPT Port, Zinc	664-310-000
		1/4 NPT Port, Zinc	664-311-000
2	Arm Assembly, Nitrile/Zinc	For 3-7" WC and 5-10" WC Only	827-012-000
		For All other ranges	827-009-000
3	Rod, Stainless Steel		646-540-000
4	Machine Screw, 5/16", plated steel (qty. 2)		648-000-417
5	Machine Screw, 3/8", plated steel (qty. 6)		648-000-418
6	Backup spring, plated steel (2.7 - 5.0 PSIG Range)		655-685-000
	Backup spring, plated steel (All Ranges Other than 2.7 - 5 PSIG)		655-715-000
7	Pin, Stainless Steel		635-062-000
8	Range Spring	3-7" WC red, plated steel	655-681-000
		5-10" WC orange, plated steel	655-682-000
		9.25-13" WC cadmium, plated steel	655-683-000
		10" WC-1.05 PSIG, blue, plated steel	655-684-000
		0.8-2.7 PSIG, yellow, plated steel	655-695-000
		2.7-5 PSIG, green, plated steel	655-696-000
9	Bonnet, Zinc		604-226-000
10	Closing Cap, Acetal		610-055-000
11	Gasket, Non-asbestos CGR 2750		624-064-000
12	Adjusting Screw, Acetal		648-000-419
13	Spring Seat, Plated Steel		650-128-000
14	Screen, Monel		647-019-000
15	Diaphragm Piston, Plated Steel		637-313-000
16	Poppet, Zinc		640-001-000
17	Diaphragm, Nitrile	(0.8 - 2.7 PSIG & 2.7 - 5.0 PSIG Ranges Only)	600-498-000
		(All Ranges Other than 0.8 - 2.7 PSIG & 2.7 - 5.0 PSIG)	600-506-000

P912 Dimensions

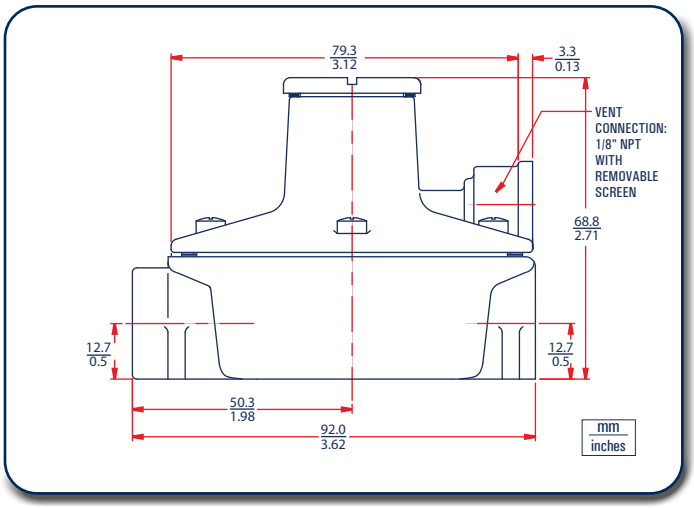

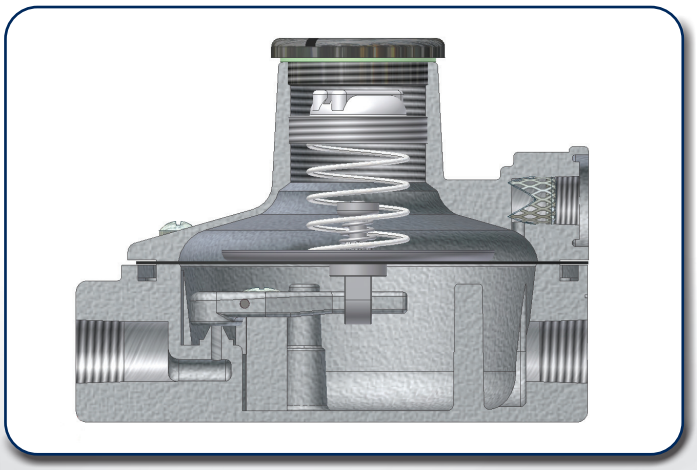

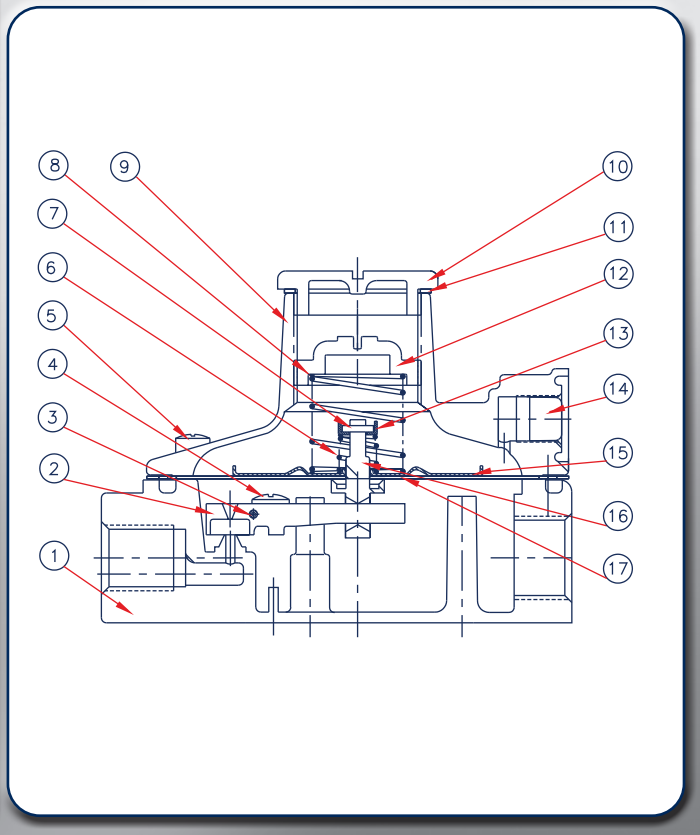

Natural Gas & Propane Regulators

Applications

- Pneumatic Controllers
- Valve Positioners
- Actuation
- Fuel Gas
- Compressed Air

P32

Superior regulation and excellent stability make the P32 Regulator ideal for lower flow applications. Square head adjustment screw allows for easy in-field calibration. The P32 is available with handwheel adjustment, output pressure gauge and/or mounting bracket as options. The use of a relief valve is recommended for this product in accordance with NFPA 58.

- 60-mesh screen
- UL listed (Standard P32)
- NACE construction available
- Harmful particles blocked
- Non-Relieving
- Temperature Range -0 to 160˚F

P36

This reliable precision preset regulator is ordered with the exact pressure regulation required. Ideal for areas requiring tamper resistant components or where incidental re-adjustment is a concern. The use of a relief valve is recommended for this product in accordance with NFPA 58.

- 60-mesh screen
- UL listed (Standard P36)
- NACE construction available
- Temperature Range -0 to 160˚F
- Harmful particles blocked
- Release undesirable moisture
- Non-Relieving

P37

The P37 contains many of the same characteristics as the P38, but at a reduced price. At 110 SCFM (16.5 Mbtu/hr), the P37 offers flow rates comparable to current market suppliers. The use of a relief valve is recommended for this product in accordance with NFPA 58.

- Balanced pintle design
- Bubble tight/non-relieving
- 16.5 Mbtu/hr. (110 scfm)
- UL listed
- Bellofram Rolling Diaphragm
- High flow capacity
- Enclosed space use
- High volume applications
- Non-Relieving
- Temperature Range -40 to 200˚F

P38

The P38 uses a patented balanced pintle design which eliminates unsteady changes in outlet pressure due to inlet pressure fluctuations. The P38 is a spring opposed, diaphragm - operated, non-relieving regulator. The use of a relief valve is recommended for this product in accordance with NFPA 58.

- Balanced pintle design
- Bubble tight/non-relieving
- 27 Mbtu/hr (260 scfm)
- UL listed
- Bellofram Rolling Diaphragm
- Temperature Range -40 to 200˚F
- Exceptional flow capacity
- Enclosed space use
- High volume applications
- Minimal effect on output pressure from variation of supply pressure

Specifications

	P32	P36	P37	P38
Sensitivity	1" water column	1" water column	1" water column	1/2" water column
Max. Inlet Pressure	250 PSIG (17 BAR)	250 PSIG (17 BAR)	400 PSIG (28 BAR)	400 PSIG (28 BAR)
Port Size	1/4 NPT	1/4 NPT	1/2, 3/4 NPT	3/8, 1/2, 3/4, 1 NPT
Outlet Ranges	0-10, 0-30, 0-60, 0-120 PSIG (0-0.7, 0-2, 0-4, 0-8 BAR)	0-20, 20-40, 40-60 PSIG (0-1.4, 1.4-2.8, 2.8-4 BAR)	0-10, 0-30, 0-60, 0-125 PSIG (0-0.7, 0-2, 0-4, 0-8 BAR)	0-30, 0-60, 0-125 PSIG (0-2, 0-4, 0-8 BAR)
Adjustment	Adjustment Screw	None	T-Bar	T-Bar
Materials of Construction	Aluminum, Brass, Plated Steel, Buna-N	Aluminum, Brass, Plated Steel, Buna-N	Zinc, Aluminum, Plated Steel, Buna-N, Brass	Zinc, Aluminum, Plated Steel, Buna-N, Brass
Diaphragm Material	Nitrile Elastomer with Polyester Fabric	Nitrile Elastomer with Polyester Fabric	Nitrile Elastomer with Polyester Fabric	Nitrile Elastomer with Polyester Fabric
Approximate Weight	0.85 lbs, 0.38 kg	0.70 lbs, 0.32 kg	1.4 lbs, 0.63 kg	5.0 lbs, 2.25 kg

P32, 36, 37 & 38 Part Matrix

P0							**0**	**0**	**0**			
										Regulator		
	32									P32 regulators		
	36									P36 regulators		
	37									P37 regulators		
	38									P38 regulators		
										Body Size		
		02								1/4"	P32 & P36 only	
		03								3/8"	P38 only	
		04								1/2"	P37 & P38 only	
		06								3/4"	P37 & P38 only	
		08								1"	P38 only	
										Spring Range (see 'NOTE' for P36)		
			010							0-10 PSIG	0-0.7 BAR	P32 & P37 only
			030							0-30 PSIG	0-2 BAR	P32, P37, P38
			060							0-60 PSIG	0-4.1 BAR	P32, P37, P38
			120							0-120 PSIG	0-8.3 BAR	P32 only
			125							0-125 PSIG	0-8.6 BAR	P37 & P38 only
										Special Construction		
				0						None		
				1						Epoxy Paint	P37 & P38 only	
				2						Tapped supply port for gauge	P38 only	
				3						Both options 1 & 2	P38 only	
				4						PED Version (for EU)	P32, P37 & P38 only	
				5						Tapped vent	P32, P37 & P38 only	
				6						Options 1 & 5	P37 & P38 only	
				7						Options 2 & 5	P38 only	
										Adjusting Method		
					0					No Option	P36, P37 & P38 only	
					1					Adjusting Screw	P32 only	
					2					Handwheel	P32 only	
										Versions		
						0				Standard		
						N				NACE	P32 & P36 only	
							0	**0**	**0**			

* NOTE: For P36
Enter the preset value in PSIG,
Example: 10 PSIG = 010
Minimum Pressure = 2 PSIG
Maximum Pressure = 60 PSIG

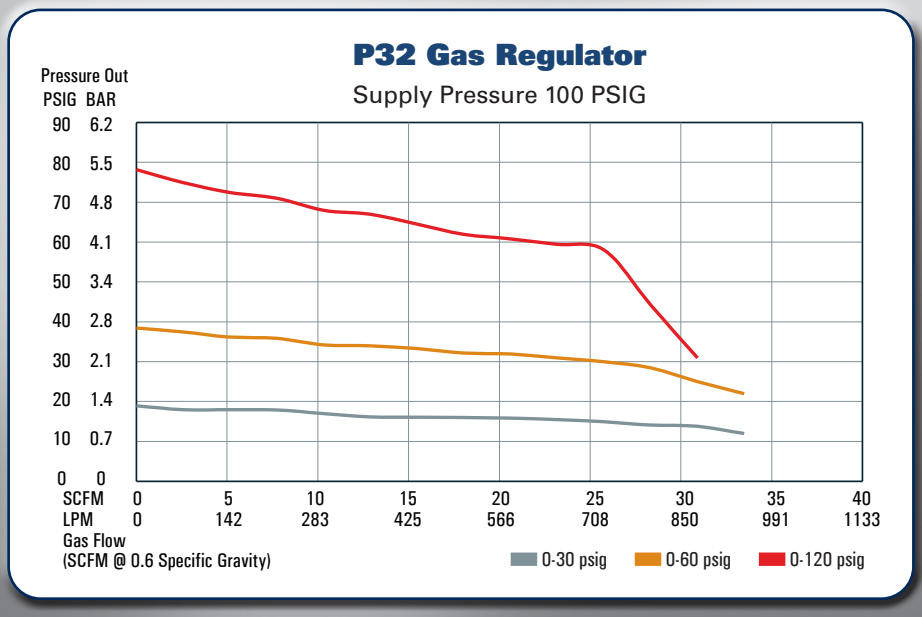

P36 Gas Regulator

Supply Pressure 100 PSIG

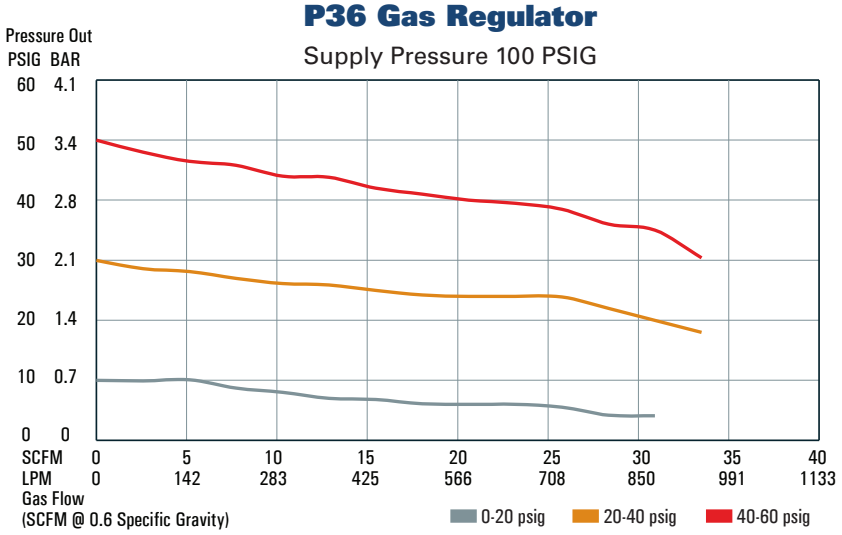

P37 Gas Regulator

Supply Pressure 100 PSIG — 3/4 NPT

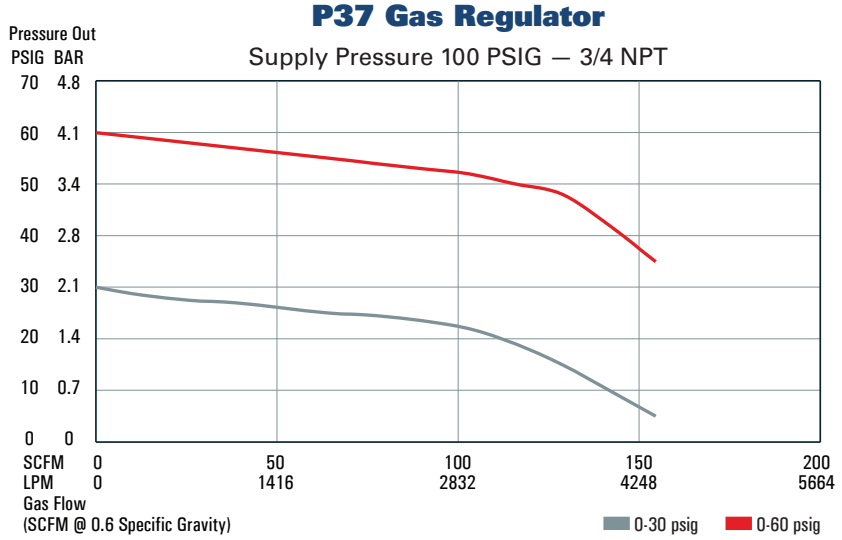

P38 Gas Regulator

Supply Pressure 100 PSIG — 3/4 NPT

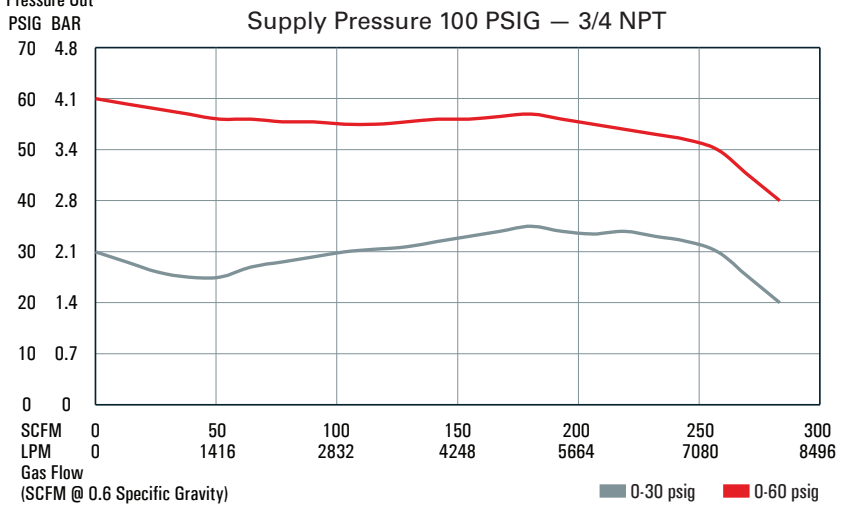

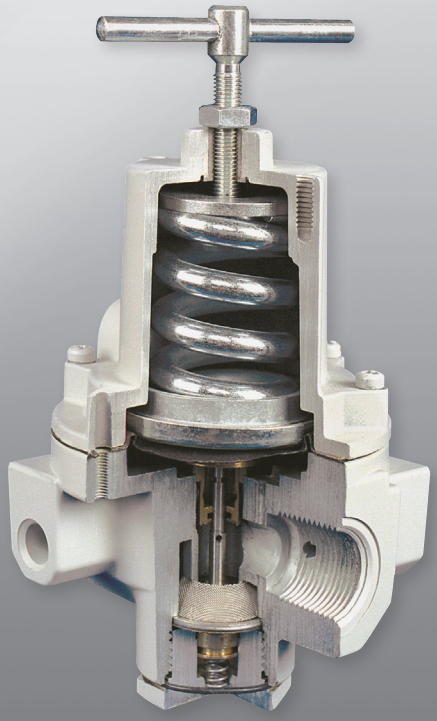

P32 Dimensions

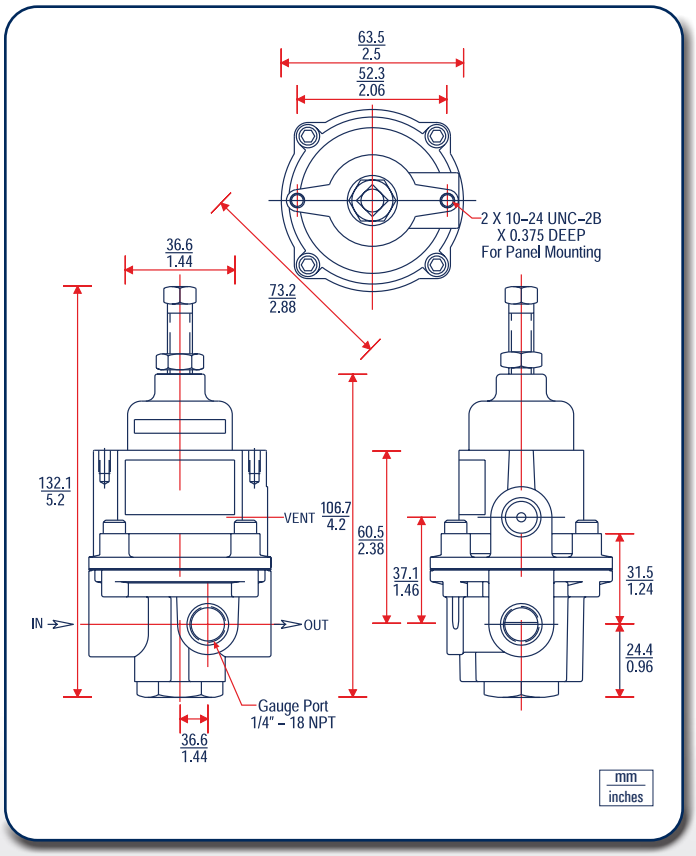

P37 Dimensions

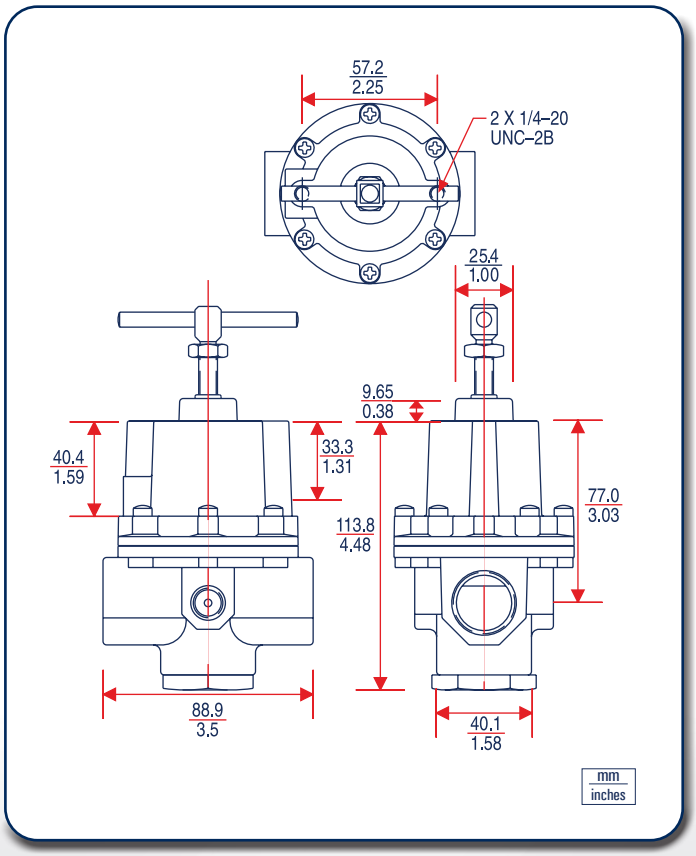

P36 Dimensions

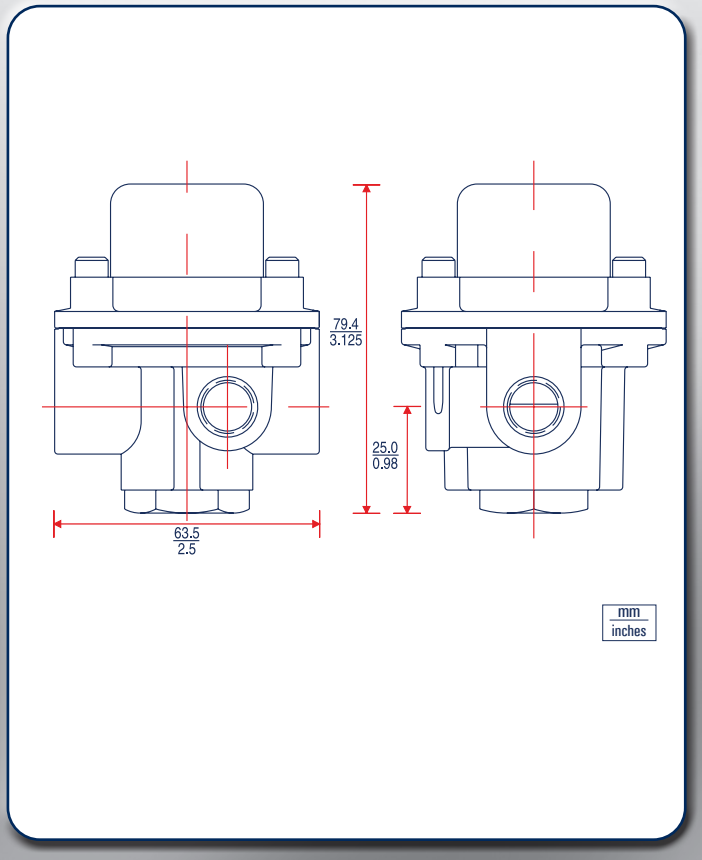

P38 Dimensions

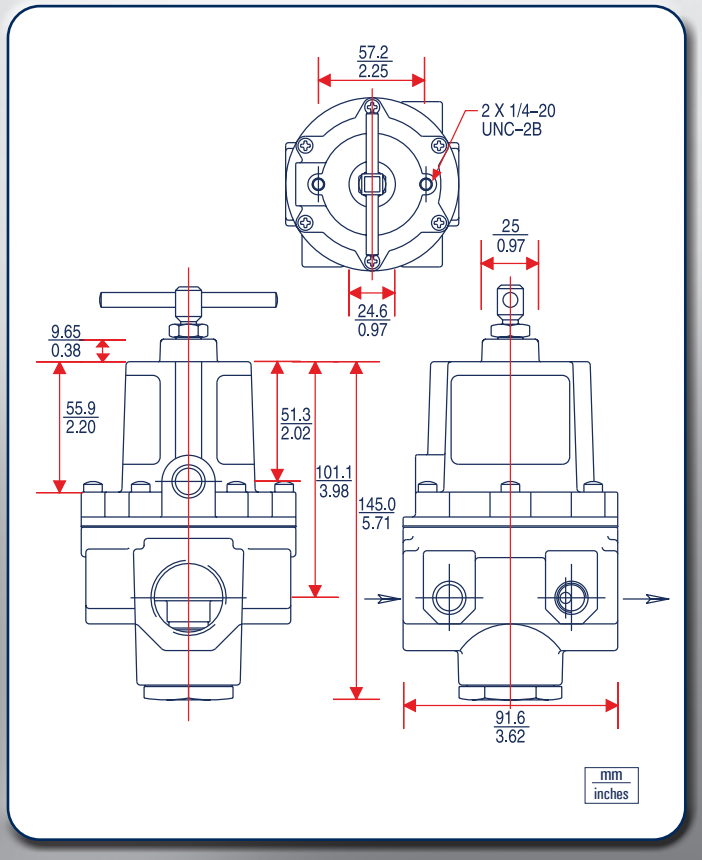

P40 & P40 NACE Regulators

- Superior regulation characteristics
- Rugged, corrosion-resistant construction
- Economical
- Self-relieving
- Standard tapped vent
- Excellent stability and repeatability
- Soft relief seat on P40
- Several mounting options

The BelGAS General Purpose P40 & P40 NACE Regulators are reliable precision units designed for instrumentation and general purpose use in both standard environments (P40), and corrosive environments (P40 NACE). The P40 NACE complies with NACE material requirement MR0175 for sulfide stress cracking resistant metallic material for oil field equipment.

Test data for these regulators show excellent performance characteristics compared with those of similar units presently on the market. These BelGAS regulators are generally superior in regulated pressure vs. flow, forward-to-reverse flow offset, supply pressure sensitivity, repeatability and stability.

Ruggedly designed and constructed, the regulators have housings of diecast aluminum. The P40 Regulator is finished with vinyl paint (which resists scratching, weathering & other physical abuse), while the P40 NACE is supplied with an epoxy paint for added corrosion protection. Both the P40 and P40 NACE, are pressure and leak tested prior to shipment from the factory.

The full flow gauge port is convenient for gauge installation and can also be used as an additional full flow outlet.

Applications

The design of these regulators is especially well suited to pilot-operated level, pressure and flow controllers and instruments.

P40 & P40 NACE Part Matrix

		0	2			0	0	0	
									Versions
	0								Standard*
	N								NACE**
		0	2						Spring Range
				010					0-10 PSIG
				035					0-35 PSIG
				060					0-60 PSIG
				120					0-120 PSIG
									Options
					00				Standard
					0K				Knob Adjustment
						0	0	0	

* Standard P40 is a Soft Relief Seat unit. Max Gas Consumption is 0.1 SCFH.

** The P40 NACE has a metal-on-metal relief seat. Max Gas consumption is 6 SCFH.

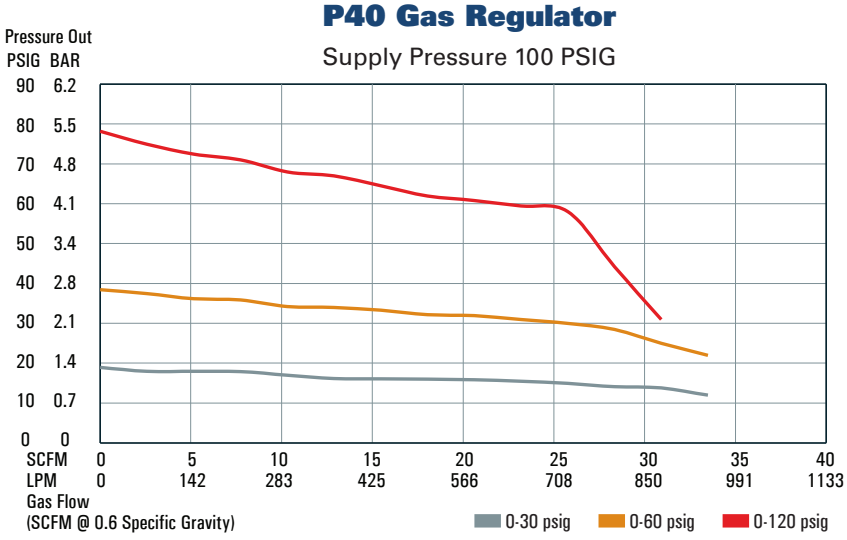

The P40 NACE is available for use in corrosive environments. This complies with NACE material requirement MR0175 for sulfide stress cracking resistant metallic material for oil field equipment.

P40 & P40 NACE Specifications

	P40 Regulator	P40 NACE Regulator
Sensitivity	1" (25.4 mm) Water Column	1" (25.4 mm) Water Column
Flow Capacity	20 SCFM (565 LPM)	20 SCFM (565 LPM)
Effect of Supply Pressure variation (25 PSIG) on Outlet Pressure	< 0.2 PSIG (0.01 BAR)	< 0.2 PSIG (0.01 BAR)
Exhaust Capacity (5 PSIG above 20 PSIG set point)	0.1–0.45 SCFM Typical (2.8–12.7 LPM)	0.1–0.45 SCFM Typical (2.8–12.7 LPM)
Maximum Input/Supply Pressure	250 PSIG (17.2 BAR)	250 PSIG (17.2 BAR)
Effect of Changes in Flow on Regulated Pressure (100 PSIG/6.9 BAR Supply)	4 PSIG (0.3 BAR) over flow 10 SCFM (283 LPM) (1⁄4 NPT, 20 PSIG / 1.4 BAR set point)	4 PSIG (0.3 BAR) over flow 10 SCFM (283 LPM) (1⁄4" NPT, 20 PSIG / 1.4 BAR set point)
Output Pressure Ranges	0-10 PSIG (0-0.7 BAR), 0-35 PSIG (0-2.4 BAR) 0-60 PSIG (0-4.1 BAR), 0-120 PSIG (0-8.3 BAR)	0-10 PSI (0-0.7 BAR), 0-35 PSIG (0-2.4 BAR) 0-60 PSIG (0-4.1 BAR), 0-120 PSIG (0-8.3 BAR)
Temperature Range	0 to 160˚F (-18 to 71˚C)	0 to 180˚F (-15 to 82˚C)
Total Air Consumption @ Maximum Output	0.1 SCFH (0.05 LPM)	6 SCFH (2.8 LPM)
Port Size	1⁄4 NPT	1⁄4 NPT
Size	2.5" X 2.5" X 5.63" (63.5 X 63.5 X 143 mm)	2.5" X 2.5" X 5.63" (63.5 X 63.5 X 143 mm)
Weight	0.82 lb. (.37 kg)	0.82 lb. (.37 kg)
Materials of Construction	Body: Diecast Aluminum with Vinyl Paint Adjusting Screw: Plated Steel Trim: Plated Steel, Brass, Acetal Resin Diaphragm: Buna-N elastomer with Polyester Fabric Knob: Phenolic Plastic (option) Spring: Music Wire	Body: Diecast Aluminum with Epoxy Paint Adjusting Screw: Plated Steel Trim: Plated Steel, Stainless Steel, Acetal Resin Diaphragm: Fluoroelastomers, Polyester Valve Spring: Inconel, Range Spring: Music Wire
Mounting	Pipe, Panel or Bracket	Pipe, Panel, or Bracket

P40 & P40 NACE Dimensions

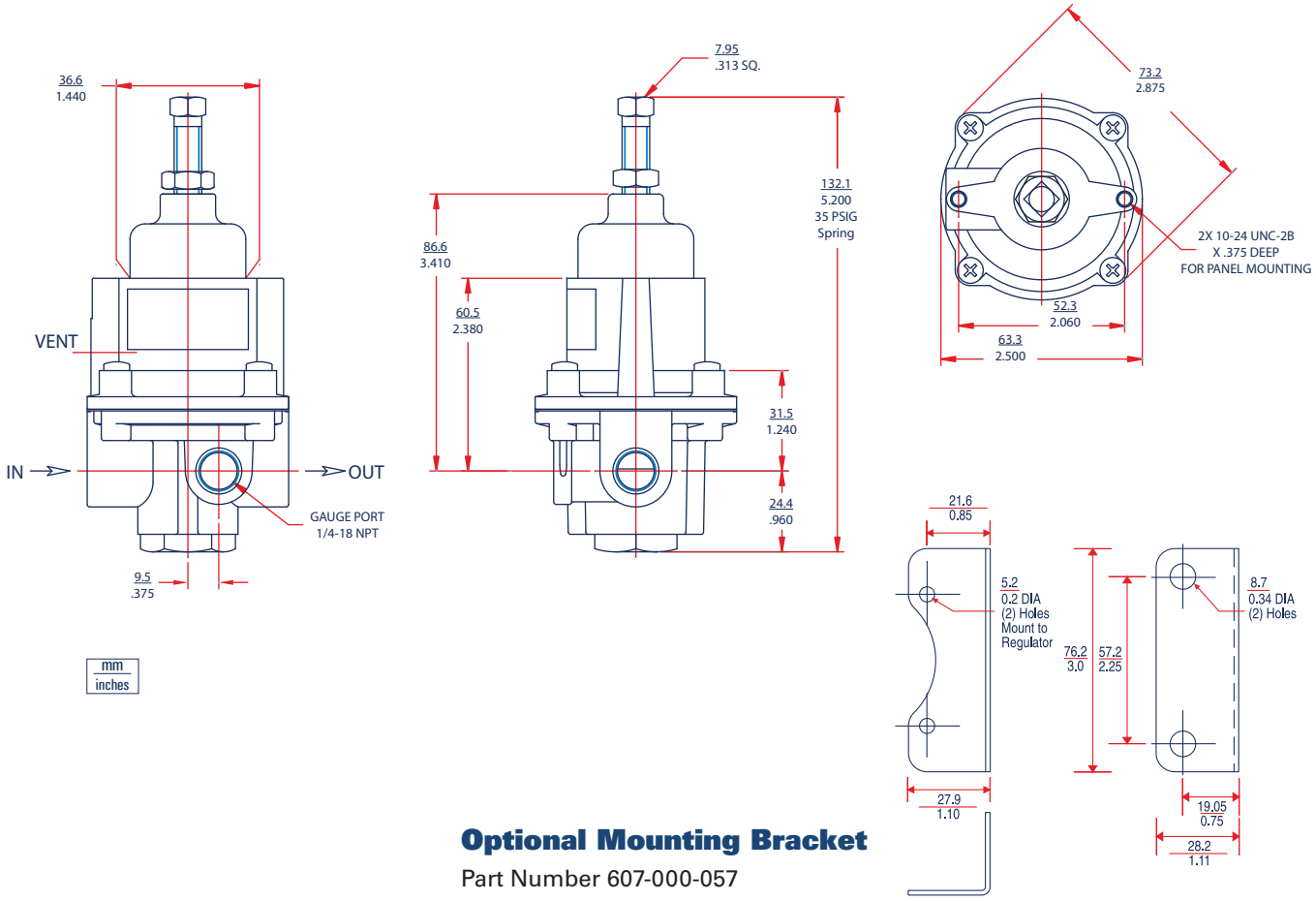

Optional Mounting Bracket

Part Number 607-000-057

P70 & P70 NACE Regulators

- Superior regulation characteristics
- Rugged, corrosion-resistant construction
- Excellent stability and repeatability
- High flow capacity (80 SCFM)
- Self-relieving
- Standard tapped vent
- Soft relief seat for low gas consumption
- Several mounting options

The BelGAS P70 Regulators are reliable precision units designed for instrumentation and general purpose use.

Test data for these regulators show excellent performance characteristics compared with those of similar units presently on the market. These BelGAS regulators are generally superior in regulated pressure vs. flow, forward-to-reverse flow offset, supply pressure sensitivity, repeatability and stability.

Ruggedly designed and constructed, the regulators have housings of diecast aluminum. The P70 Regulator is finished with vinyl paint (which resists scratching, weathering & other physical abuse), while the P70 NACE is supplied with an epoxy paint for added corrosion protection. The P70 regulator is pressure and leak tested prior to shipment from the factory.

The full flow gauge ports are convenient for gauge installation and can also be used as an additional full flow outlet ports.

Applications

The design of these regulators is especially well suited to pilot-operated level, pressure and flow controllers and pneumatic instruments.

P70 & P70 NACE Specifications

Sensitivity	1/4" WC (6.4 mm)	
Flow Capacity	80 SCFM	2266 LPM
Effect of Supply Pressure variation (25 PSIG) on Outlet Pressure	< 0.05 PSIG	0.003 BAR
Exhaust Capacity (5 PSIG above 20 PSIG set point)	3 SCFM Typical	85 LPM
Maximum Input/Supply Pressure	250 PSIG	17.2 BAR
Effect of Changes in Flow on Regulated Pressure (100 PSIG/6.9 BAR Supply)	2.5 PSIG (0.2 BAR) over flow 50 SCFM (1416 LPM)	
Output Pressure Ranges	0-15 PSIG 0-30 PSIG 1-60 PSIG 2-100 PSIG 2-150 PSIG	0-1.0 BAR 0-2.1 BAR 0.1-4.1 BAR 0.2-6.9 BAR 0.2-10.3 BAR
Temperature Range	-40 to 200 °F	-40 to 93 °C
Total Air Consumption @ Maximum Output	0.1 SCFH	0.05 LPM
Port Size	1/4 NPT, 3/8 NPT, 1/2 NPT	
Size	3.0" x 3.0" x 6.0"	76 x 76 x 152 mm
Weight	1.41 lb.	0.6 kg
Mounting	Pipe, Panel or Bracket	

P70 & P70 NACE Part Matrix

P070						**0**	**0**	**0**	
									Port Size
	02								1/4 NPT
	03								3/8 NPT
	04								1/2 NPT
									Spring Range
		015							0 - 15 PSIG 0 - 1.0 BAR
		030							0 - 30 PSIG 0 - 2.1 BAR
		060							1 - 60 PSIG 0.1 - 4.1 BAR
		100							2 - 100 PSIG 0.2 - 6.9 BAR
		150							2 - 150 PSIG 0.2 - 10.3 BAR
									Special Construction
			0						Standard
			1						Epoxy Paint
			N						NACE Construction (Wetted Parts)
									Adjusting Method
				1					Square Head Screw
				2					Knob (Handwheel)
									Relieving Options
					0				Relieving*
					1				Non-Relieving
						0	**0**	**0**	

* Relieving version will have no constant bleed.

Materials of Construction

Body	Die Cast Aluminum
Adjusting Screw	P70 - Zinc Plated Steel
	P70 NACE - 316 Stainless Steel
Trim	Plated Steel , Brass, Acetal Resin
Knob	Phenolic Plastic (option)
Spring:	Music Wire
Diaphragm Material	P70 - Buna-N Elastomer with Polyester Fabric
	P70 NACE - Fluorocarbon with Dacron Fabric

P70 Flow Data

Outlet Pressure Range	Outlet Pressure Setting		Inlet Pressure		Air Capacity (SCFH)	
	PSIG	BAR	PSIG	BAR	20% Offset	MAX
0 to 15 PSIG (0 to 1 BAR)	5	0.3	10	0.7	140	570
			15	1.0	150	690
			25	1.7	185	960
			50	3.5	300	1500
			100	6.9	360	2700
	10	0.7	15	1.0	330	690
			25	1.7	492	930
			50	3.5	750	1560
			100	6.9	1260	2700
			125	8.6	1680	3300
	15	1.0	25	1.7	570	960
			50	3.5	900	1620
			100	6.9	1680	2820
			125	8.6	2100	3480
0 to 30 PSIG (0 to 2.1 BAR)	5	0.3	15	1.0	110	840
			50	3.5	250	1800
			100	6.9	345	3300
			125	8.6	400	3600
	15	1.0	25	1.7	450	1320
			50	3.5	1140	1920
			100	6.9	1800	3900
			125	8.6	2160	4500
	25	1.7	35	2.4	1320	1740
			50	3.5	1800	2280
			100	6.9	2820	3900
			125	8.6	3300	4800
	30	2.1	40	2.8	1500	1800
			50	3.5	1560	2100
			100	6.9	3240	3900
			125	8.6	3960	4800
1 to 60 PSIG (0.07 to 4.1 BAR)	20	1.4	30	2.1	600	1080
			50	3.5	960	1620
			100	6.9	1680	2820
			125	8.6	2280	3480
	30	2.1	40	2.8	870	1440
			50	3.5	1110	1620
			100	6.9	1980	3060
			125	8.6	7500	3780
	40	2.8	50	3.5	1050	1800
			100	6.9	2100	3300
			125	8.6	2700	4080
	60	4.2	70	4.8	1560	2700
			100	6.9	2400	3720
			125	8.6	3000	4500
2 to 100 PSIG (0.14 to 6.9 BAR)	40	2.8	50	3.5	1260	2100
			100	6.9	2280	3960
			125	8.6	2820	4800
	60	4.2	70	4.8	1800	3000
			100	6.9	2700	4050
			125	8.6	3360	4920
	80	5.5	100	6.9	3000	4140
			125	8.6	3900	5040
	100	6.9	110	7.6	3300	4500
			125	8.6	4020	5100
2 to 150 PSIG (0.14 to 10.3 BAR)	50	3.5	60	4.1	870	2700
			100	6.9	1440	3720
			125	8.6	1620	5220
	75	5.2	85	5.9	1800	3780
			100	6.9	2250	4380
			125	8.6	2760	5280
	100	6.9	110	7.6	3060	4800
			125	8.6	3660	5280

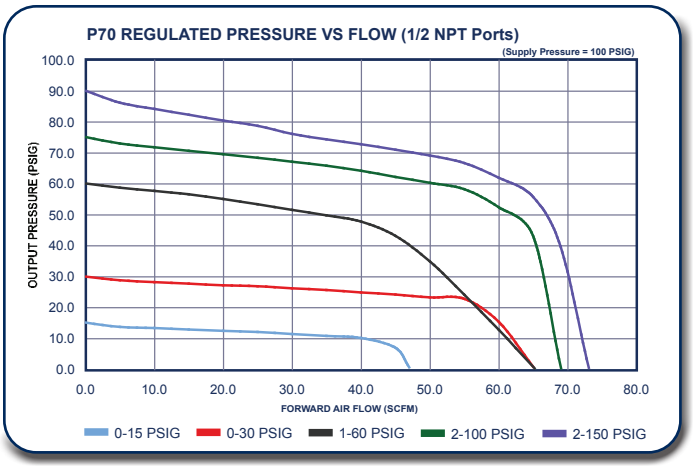

P70 Dimensions

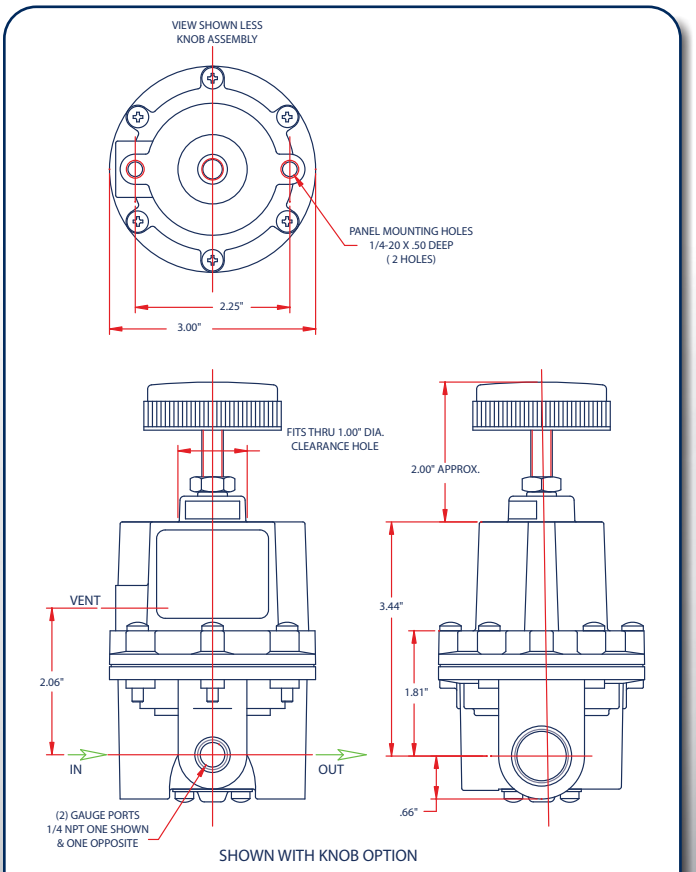

Optional Mounting Bracket

Part Number 607-000-047

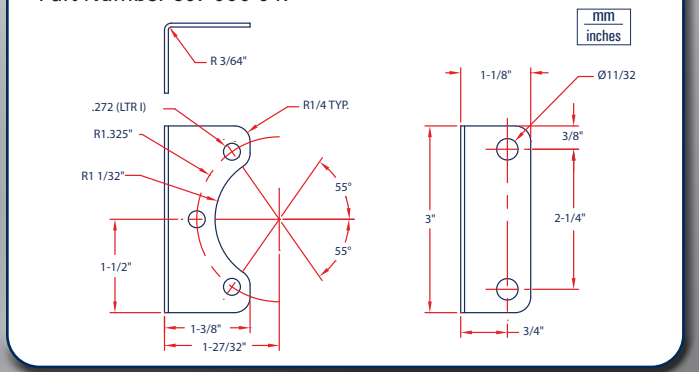

Control Panel Regulators

- Modular design for service & interchangeability
- Non-rising adjustment knob with push-pull lock ring feature
- Small package size and light weight construction
- Competitively priced

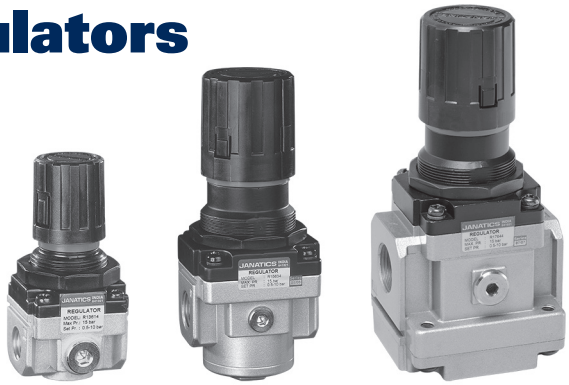

	MA13	MA14	MA15	MA17
Filters				
Port Size	1⁄8, 1⁄4" NPT	1⁄4, 3⁄8" NPT	1⁄4, 3⁄8, 1⁄2" NPT	3⁄4, 1" NPT
Filtration (micron)	5µ, 25µ, 50µ	5µ, 25µ, 50µ	5µ, 25µ, 50µ	5µ, 25µ, 50µ
Maximum Supply Pressure	140 PSI (10 BAR)/ 280 PSI (20 BAR) with metal bowl	140 PSI (10 BAR)/ 280 PSI (20 BAR) with metal bowl	140 PSI (10 BAR)/ 280 PSI (20 BAR) with metal bowl	140 PSI (10 BAR)/ 280 PSI (20 BAR) with metal bowl
Temperature Range*	41º–120ºF (140ºF metal bowl) 5º–50º C (60ºC metal bowl)	41º–120ºF (140ºF metal bowl) 5º–50º C (60ºC metal bowl)	41º–120ºF (140ºF metal bowl) 5º–50º C (60ºC metal bowl)	41º–120ºF (140ºF metal bowl 5º–50º C (60ºC metal bowl)
Drain	Manual / Semi-Auto	Manual / Semi-Auto / Auto	Manual / Semi-Auto / Auto	Manual / Semi-Auto / Auto
Bowl Capacity oz (ml)	0.3 oz (9 ml)	1.1 oz (32 ml) Standard, 1.2 oz (35ml) AD, 2.2 oz (64ml) metal	1.5 oz (44 ml) Standard, 2.2 oz (65ml) AD, 3.1 oz (90ml) metal	5.6 oz (165 ml)
Flow (based on 85 psi inlet pressure with 40 micron filter)	15, 28 SCFM (425, 800 lpm)	27, 78 SCFM (765, 2250 lpm)	29, 76, 123 SCFM (815, 2185, 3500 lpm)	175, 228 (5000, 6500 lpm)
Regulators				
Max. Supply Pressure	225 PSI (15.5 bar)	225 PSI (15.5 bar)	225 PSI (15.5 bar)	225 PSI (15.5 bar)
Flow Capacity at 100 PSIG (6.9 BAR)	11,21 SCFM (315, 600 lpm)	61,87 SCFM (1750, 2500 lpm)	80,118, 140 SCFM (2280, 4764, 4000 lpm)	175, 228 SCFM (5000, 6000 lpm)
Output Pressure Ranges	0-10 psig (0-0.69 BAR)	0-10 psig (0-0.69 BAR)	0-10 psig (0-0.69 BAR)	0-10 psig (0-0.69 BAR)
	3-30 psig (0-2.1 BAR)	3-30 psig (0-2.1 BAR)	3-30 psig (0-2.1 BAR)	3-30 psig (0-2.1 BAR)
	3-60 psig (0-4.1 BAR)	3-60 psig (0-4.1 BAR)	3-60 psig (0-4.1 BAR)	3-60 psig (0-4.1 BAR)
	7-140 psig (0-9.6 BAR)	7-140 psig (0-9.6 BAR)	7-140 psig (0-9.6 BAR)	7-140 psig (0-9.6 BAR)
Temperature Range	41º–140º F / 5º–60º C	41º–140º F / 5º–60º C	41º–140º F / 5º–60º C	41º–140º F / 5º–60º C
Port Size	1⁄8, 1⁄4" NPT	1⁄8, 3⁄8" NPT	1⁄8, 3⁄8, 1⁄2" NPT	3/4, 1" NPT
Mounting Options	Pipe, Panel or Bracket	Pipe, Panel or Bracket	Pipe, Panel or Bracket	Pipe, Panel or Bracket
Filter-Regulators				
Port Size	1⁄8, 1⁄4" NPT	1⁄4, 3⁄8" NPT	1⁄4, 3⁄8, 1⁄2" NPT	3/4, 1" NPT
Filtration (micron)	5µ, 25µ, 40µ	5µ, 25µ, 40µ	5µ, 25µ, 40µ	5µ, 25µ, 40µ
Maximum Supply Pressure	140 PSI (10 BAR)/ 280 PSI (20 BAR) with metal bowl	140 PSI (10 BAR)/ 280 PSI (20 BAR) with metal bowl	140 PSI (10 BAR)/ 280 PSI (20 BAR) with metal bowl	140 PSI (10 BAR)/ 280 PSI (20 BAR) with metal bowl
Temperature Range*	41º–120ºF (140ºF metal bowl) 5º–50º C (60º C metal bowl)	41º–120ºF (140ºF metal bowl) 5º–50º C (60º C metal bowl)	41º–120ºF (140ºF metal bowl) 5º–50º C (60º C metal bowl)	41º–120ºF (140ºF metal bowl)
Drain	Manual / Semi-Auto	Manual / Semi-Auto / Auto	Manual / Semi-Auto / Auto	Manual / Semi-Auto / Auto
Bowl Capacity oz (ml)	0.3 oz (9 ml)	1.1 oz (32 ml) Standard, 1.2 oz (35ml) AD, 2.2 oz (64ml) metal	2.2 oz (65ml) AD, 3.1 oz (90ml) metal	5.6 oz (165 ml)
Output Pressure Ranges	0-10 psig (0-0.69 BAR)	0-10 psig (0-0.69 BAR)	0-10 psig (0-0.69 BAR)	0-10 psig (0-0.69 BAR)
	3-30 psig (0-2.1 BAR)	3-30 psig (0-2.1 BAR)	3-30 psig (0-2.1 BAR)	3-30 psig (0-2.1 BAR)
	3-60 psig (0-4.1 BAR)	3-60 psig (0-4.1 BAR)	3-60 psig (0-4.1 BAR)	3-60 psig (0-4.1 BAR)
	7-140 psig (0-9.6 BAR)	7-140 psig (0-9.6 BAR)	7-140 psig (0-9.6 BAR)	7-140 psig (0-9.6 BAR)
Flow (based on 100 psi inlet pressure with 40 micron filter)	8.8, 19.3 SCFM (250, 550 lpm)	25, 63 SCFM (725, 1800 lpm)	32, 81, 105 SCFM (915, 2300, 3000 lpm)	210 SCFM (6000 lpm)/ 228 SCFM (6800 lpm) STD, metal/ 212 SCFM(6000 lpm)/ 214 SCFM(6000 lpm) AUTO

* Metal Bowls have a higher temp. range; (41º–140º F / 5º–60º C)

Regulator - Series MA

Model MA13R, MA14R, MA15R

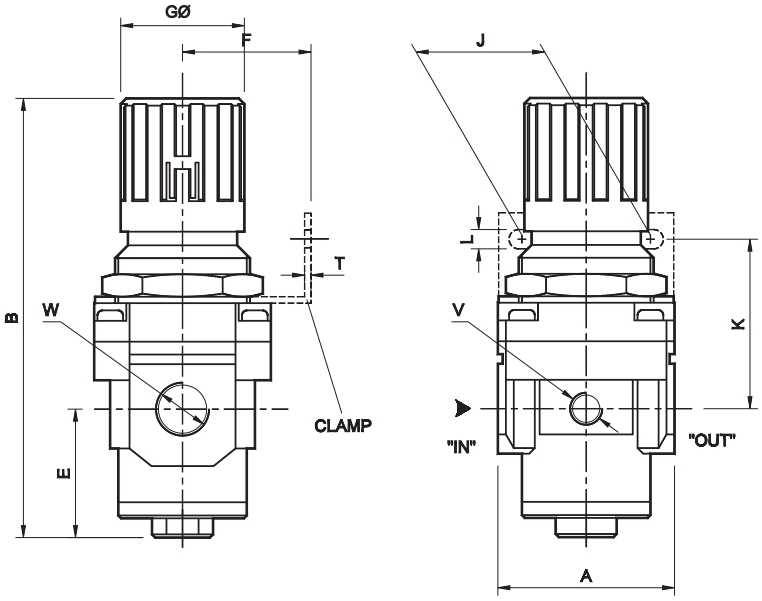

Panel cut hole dia

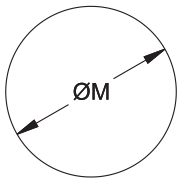

Model MA17R

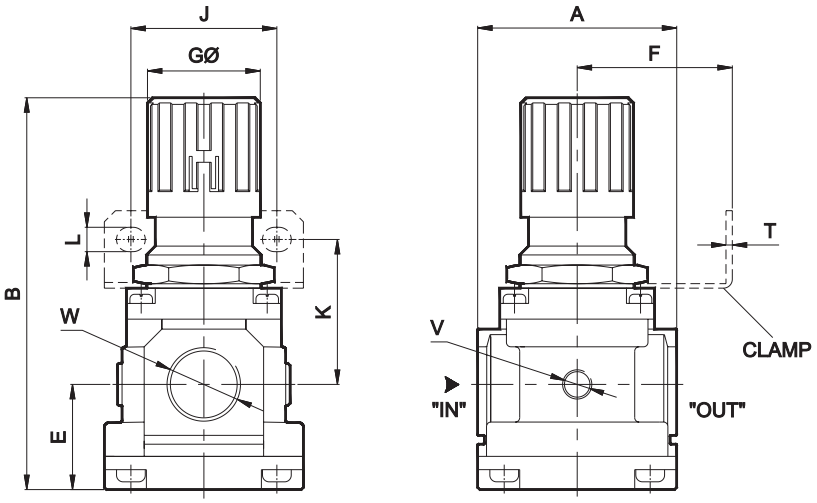

MODEL	W	V		A	B	E	F	GØ	J	K	L	T	ØM
MA13	NPT 1/8 (G1/8) NPT 1/4 (G1/4)	NPT 1/8 (G1/8)	Inch (mm)	SQ. 1.575 (40)	3.189 (81)	0.512 (13)	1.181 (30)	1.102 (28)	1.102 (28)	1.771 (45)	0.216 (5.5)	0.079 (2)	1.22 (31)
MA14	NPT 1/4 (G1/4) NPT 3/8 (G3/8)	NPT 1/8 (G1/8)	Inch (mm)	SQ. 2.165 (55)	5.315 (135)	1.575 (40)	1.574 (40)	1.574 (40)	1.574 (40)	2.087 (53)	0.256 (6.5)	0.079 (2)	1.693 (43)
MA15	NPT 1/4 (G1/4) NPT 3/8 (G3/8) NPT 1/2 (G1/2)	NPT 1/8 (G1/8)	Inch (mm)	SQ. 2.756 (70)	6.496 (165)	1.575 (40)	1.968 (50)	2.008 (51)	2.165 (55)	2.441 (62)	0.335 (8.5)	0.079 (2)	2.087 (53)
MA17	NPT 3/4 (G3/4)	NPT 1/4 (G1/4)	Inch (mm)	SQ. 3.543 (90)	6.969 (177)	1.87 (47.5)	2.756 (70)	2.008 (51)	2.598 (66)	2.560 (65)	0.433 (11)	0.197 (5)	2.087 (53)
MA17	NPT 1 (G1)	NPT 1/4 (G1/4)	Inch (mm)	SQ. 3.543 (90)	6.969 (177)	1.87 (47.5)	2.756 (70)	2.008 (51)	2.598 (66)	2.560 (65)	0.433 (11)	0.197 (5)	2.087 (53)

For Details of Clamp see optional accessories

Filter Regulator Combination - Series MA

Model MA13FR

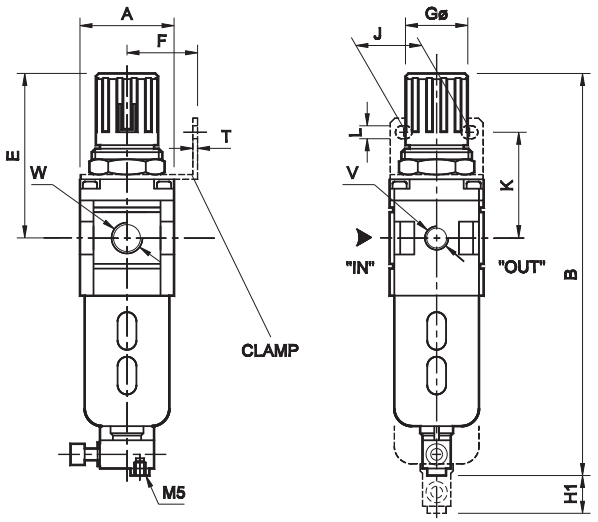

Model MA14FR, MA15FR

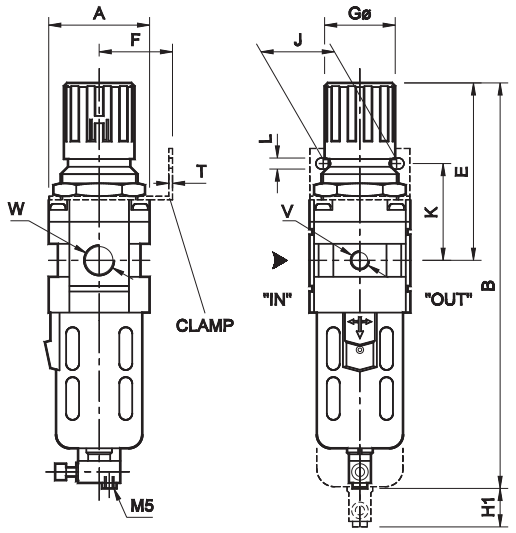

Model MA17FR

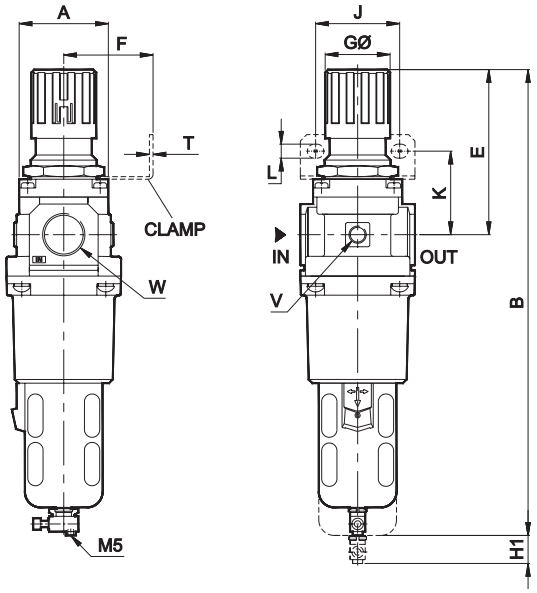

MODEL	W	V		A	B	E	F	K	GØ	J	L	T	H1
MA13	NPT 1/8 (G1/8) NPT 1/4 (G1/4)	NPT 1/8 (G1/8)	Inch (mm)	SQ. 1.575 (40)	6.69 (170)	2.68 (68)	1.181 (30)	1.771 (45)	1.102 (28)	1.102 (28)	0.216 (5.5)	0.079 (2)	1.968 (50)
MA14	NPT 1/4 (G1/4) NPT 3/8 (G3/8)	NPT 1/8 (G1/8)	Inch (mm)	SQ. 2.165 (55)	8.66 (220)	3.74 (95)	1.574 (40)	2.087 (53)	1.574 (40)	1.574 (40)	0.256 (6.5)	0.079 (2)	2.165 (55)
MA15	NPT 1/4 (G1/4) NPT 3/8 (G3/8) NPT 1/2 (G1/2)	NPT 1/8 (G1/8)	Inch (mm)	SQ. 2.756 (70)	11.02 (280)	4.92 (125)	1.968 (50)	2.441 (62)	2.008 (51)	2.165 (55)	0.335 (8.5)	0.079 (2)	3.15 (80)
MA17	NPT 3/4 (G3/4)	NPT 1/4 (G1/4)	Inch (mm)	SQ. 3.543 (90)	14.57 (370)	5.12 (130)	2.756 (70)	2.560 (65)	2.008 (51)	2.598 (66)	0.433 (11)	0.197 (5)	3.15 (80)
MA17	NPT 1 (G1)	NPT 1/4 (G1/4)	Inch (mm)	SQ. 3.543 (90)	14.57 (370)	5.12 (130)	2.756 (70)	2.560 (65)	2.008 (51)	2.598 (66)	0.433 (11)	0.197 (5)	3.15 (80)

For Details of Clamp see optional accessories

Filter - Series MA

Model MA13F

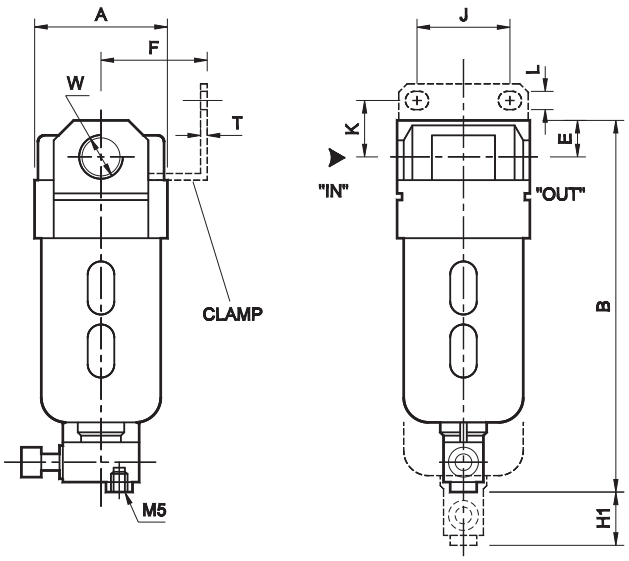

Model MA14F, MA15F

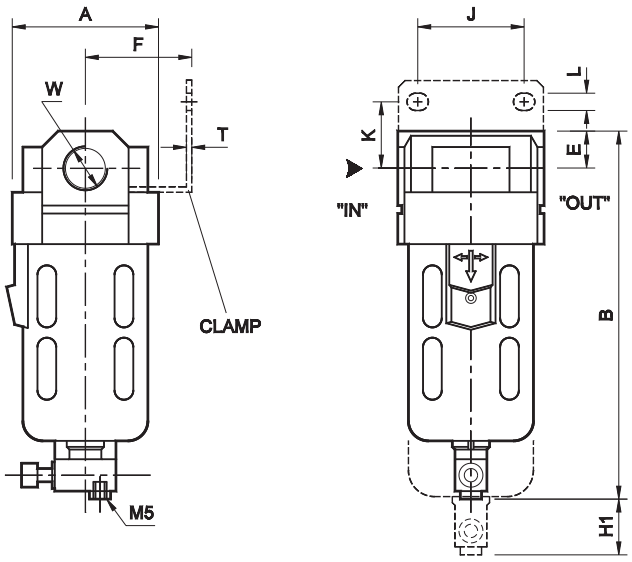

Model MA17F

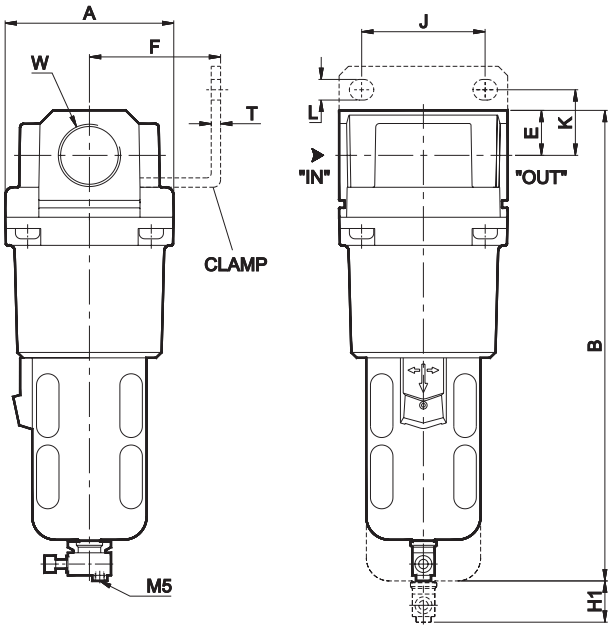

MODEL	W		A	B	E	K	F	J	L	T	H1
MA13	NPT 1/8 (G1/8) NPT 1/4 (G1/4)	Inch (mm)	SQ. 1.575 (40)	4.449 (113)	0.43 (11)	0.59 (15)	1.181 (30)	1.102 (28)	0.216 (5.5)	0.079 (2)	1.968 (50)
MA14	NPT 1/4 (G1/4) NPT 3/8 (G3/8)	Inch (mm)	SQ. 2.165 (55)	5.512 (140)	0.55 (14)	0.98 (25)	1.575 (40)	1.575 (40)	0.256 (6.5)	0.079 (2)	2.165 (55)
MA15	NPT 1/4 (G1/4) NPT 3/8 (G3/8) NPT 1/2 (G1/2)	Inch (mm)	SQ. 2.756 (70)	6.772 (172)	0.71 (18)	0.98 (25)	1.968 (50)	2.165 (55)	0.335 (8.5)	0.079 (2)	3.15 (80)
MA17	NPT 3/4 (G3/4)	Inch (mm)	SQ. 3.543 (90)	10.236 (260)	0.95 (24)	1.38 (35)	2.756 (70)	2.598 (66)	0.433 (11)	0.196 (5)	3.15 (80)
MA17	NPT 1 (G1)	Inch (mm)	SQ. 3.543 (90)	10.236 (260)	0.95 (24)	1.38 (35)	2.756 (70)	2.598 (66)	0.433 (11)	0.196 (5)	3.15 (80)

For Details of Clamp see optional accessories

Accessories - Clamps

Clamp for filter, Lubricator

MODEL		J	L	L1	T	ORDERING NO.
MA13	Inch	1.102	0.216	0.551	0.079	MA13FB
	mm	28	5.5	14	2	
MA14	Inch	1.575	0.256	0.69	0.079	MA14FB
	mm	40	6.5	17.5	2	
MA15	Inch	2.165	0.335	0.87	0.079	MA15FB
	mm	55	8.5	22	2	
MA17	Inch	2.60	0.43	1.30	0.20	MA17FB
	mm	66	11	33	5	

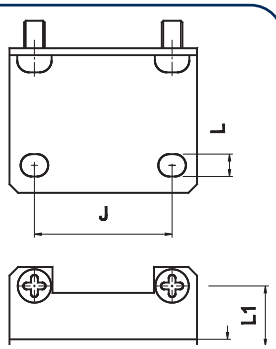

Clamp for Regulator

MODEL		ØM	F	L	J	T	ORDERING NO.
MA13	Inch	1.2	1.181	0.216	1.102	0.079	MA13RB
	mm	30.5	30	5.5	28	2	
MA14	Inch	1.673	1.575	0.256	1.575	0.079	MA14RB
	mm	42.5	40	6.5	40	2	
MA15	Inch	2.067	1.968	0.335	2.165	0.079	MA15RB
	mm	52.5	50	8.5	55	2	
MA17	Inch	2.067	2.756	0.433	2.598	0.197	MA17RB
	mm	52.5	70	11	66	5	

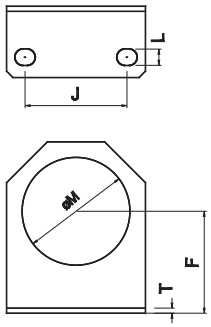

Accessories - for Modular Construction

Wall Mounting Bracket

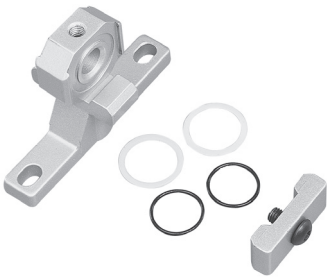

MODEL		L1	J	L	F	T	
MA13	Inch	0.472	1.968	0.275	1.378	0.275	A2W01
	mm	12	50	7	36	7	
MA14	Inch	0.551	2.756	0.275	1.772	0.275	A2W02
	mm	14	70	7	45	7	
MA15	Inch	0.63	3.543	0.354	2.165	0.354	A2W03
	mm	16	90	9	55	9	
MA17	Inch	0.59	3.94	0.472	2.76	0.39	A2W04
	mm	15	100	12	70	10	

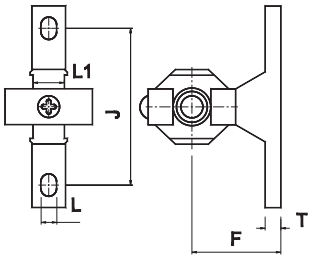

How to Order: Mention the ordering number required

REPLACEMENT FILTERS		
Description		Part Number
MA13	5 Micron Filter Element	MA13FK05
MA13	25 Micron Filter Element	MA13FK25
MA13	50 Micron Filter Element	MA13FK50
MA14	5 Micron Filter Element	MA14FK05
MA14	25 Micron Filter Element	MA14FK25
MA14	50 Micron Filter Element	MA14FK50
MA15	5 Micron Filter Element	MA15FK05
MA15	25 Micron Filter Element	MA15FK25
MA15	50 Micron Filter Element	MA15FK50
MA17	5 Micron Filter Element	MA17FK05
MA17	25 Micron Filter Element	MA17FK25
MA17	50 Micron Filter Element	MA17FK50

P350 Series Stainless & Aluminum Filters

The P350 series filters are high pressure units usually not for use directly on the pilot, but rather utilized on the tap out from a high pressure line. The sooner the medium is cleaned before moving toward the pilot operation, the less chance of debris and moisture clogging input lines and filters upstream of the high pressure supply.

The maximum inlet pressure for the Stainless version is 5,000 PSIG while the Aluminum version is 2,150 PSIG.

The P350 filter can be found in Tab 5.

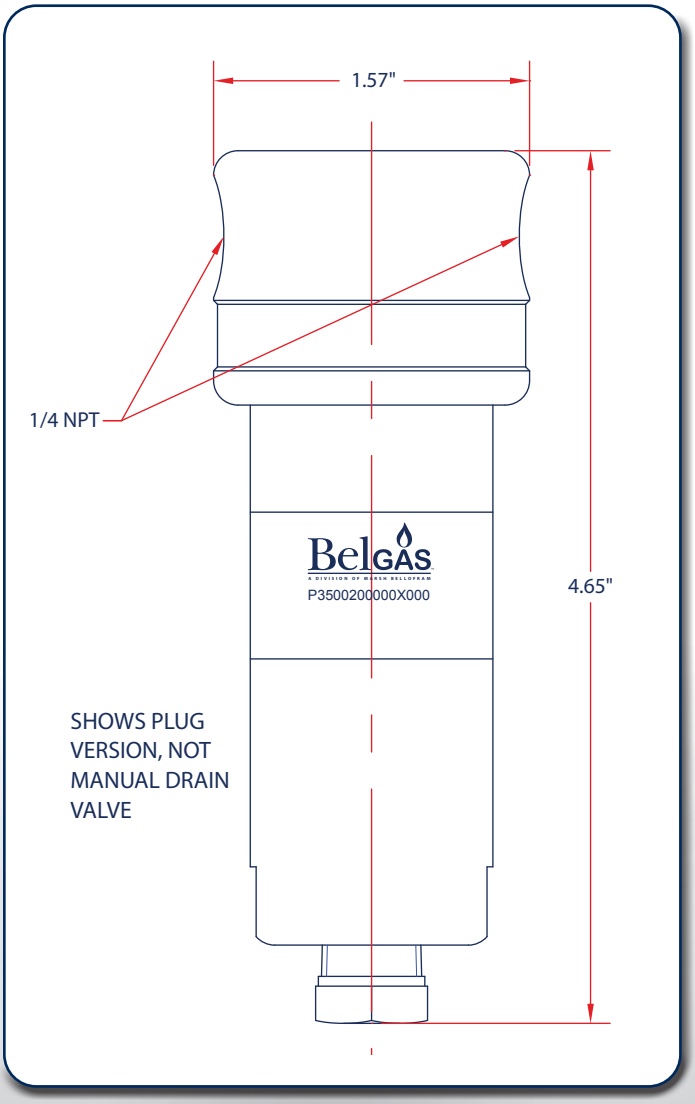

P119 Control Valve

- Tight Shut-off
- Easy Installation
- Leak Detection
- Low Seat Leakage
- Gas or Liquid Service
- Inline Maintenance
- NACE Capability
- Low Temperature Version Available

The Type P119 Control Valve is versatile and can be used for on/off or throttling service. Springs range from 3-15 psi to 30-60 psi. The valve can be used in corrosive or non-corrosive gases or liquids, limited by available compatible materials. Maintenance on the valve can be accomplished without removing the valve body from the line (pressure must be removed and the valve isolated before attempting). A vent is provided in the valve actuator to detect leakage of actuator stem seals. Our combination disc assembly and seat offer positive shutoff at maximum body working pressure. NACE construction materials are standard for the steel body valve only, and comply with the National Association of Corrosion Engineers MR0175.

Applications

- On-Off or Throttling Control
- Heater Fuel Valve Control
- Gas Distribution

P119 Part Matrix

P119			0	0					
								Port Size	
	06							3/4 NPT	* 1-1/4" Available in Iron Bodies Only
	08							1 NPT	
	12							1-1/4 NPT*	
								Spring Range	
								PSIG / BAR	
		015						3 - 15 / .20 - 1.03	
		020						5 - 20 / .34 - 1.38	
		035						5 - 35 / .34 - 2.41	
		060						30 - 60 / 2.07 - 4.14	
			0	0				Orifice	
					2			1/8"	
					3			3/16"	
					4			1/4"	
					5			5/16"	
					6			3/8"	
					8			1/2"	
					9			9/16"	
								Seat/Diaphragm Material	
						00		Nitrile	
						22		Fluorocarbon	
						LL		Low Temperature**	**Must order LCC Body
								Body Material	***Units with a Steel Body selection will automatically be provided with internal parts conforming to NACE MR0175. Orifice and Seat Housing will be made from 316SS.
							0	Iron	
							2	Steel***	

Specifications

Body Sizes and End Connection Styles	3/4, 1 or 1-1/4 NPT screwed	
Maximum Inlet Pressure	150 PSIG	10.3 BAR
Maximum Pressure Drop	150 PSIG	10.3 BAR
	For all port diameters	
Maximum Housing Pressure	150 PSIG	10.3 BAR
Spring Ranges	See Table	
Material Temperature Capabilities	With Nitrile Seat / Diaphragm	
	-20 to 170˚F	-29 to 77˚C
	With Fluoroelastomer Seat / Diaphragm	
	40˚to 250˚F	4.4 to 121˚C
	Low Temperature Version	
	- 40˚to +170˚F	- 40˚ to +77˚C
	Note: Not for use with hot water or ammonia.	
Orifice Size and Flow Coefficients	See Table	
Pressure Setting Adjustment	May be adjusted throughout each spring range by rotating the adjusting screw	
Actuator Pressure Connection	1/4 NPT female	
Spring Case and Bonnet Vents	1/4 NPT female	
Weight	lbs.	kg.
3/4"	4.8	2.2
1"	4.8	2.2
1-1/4"	4.7	2.1

Materials of Construction

Body	Cast Iron, WCB Steel, LCC Steel
Housing	Aluminum
Bonnet	Aluminum
Disk Holder Assembly	Aluminum and Nitrile (standard), Stainless Steel and Nitrile, Stainless Steel and Fluoroelastomer, Aluminum and Fluoroelastomer, or Stainless Steel with Low Temperature Neoprene
Orifice	Aluminum (Standard) or 316 Stainless Steel
Diaphragm	Nitrile, Fluoroelastomer
O-rings	Nitrile, (Standard) or Fluoroelastomer
Stem Wiper	TFE
Adjusting Screw	Steel
Spring	Steel

P119 Flow Coefficients

Orifice Size		3/4 Inch Body	1 Inch Body	1-1/4 Inch Body
Inches	mm	C_v	C_v	C_v
1/8	3.2	0.45	0.45	0.45
3/16	4.8	0.93	0.93	0.93
1/4	6.4	1.6	1.6	1.6
5/16	7.9	2.7	2.7	2.7
3/8	9.5	3.3	3.4	3.6
1/2	12.7	4.6	5.0	5.7
9/16	14.3	5.7	6.0	7.0

P119 Control Valve Rebuild Kits

	Part Number	Kit Includes

P119 Spring Selection

Spring Range		Spring Part Number	Spring Color Code
PSIG	BAR		
3 - 15	0.2 - 1.0	655-689-000	Red
5 - 20	0.3 - 1.4	655-676-000	Silver
5 - 35	0.3 - 2.4	655-703-000	Blue
30 - 60	2.1 - 4.1	655-690-000	Green

P119 Gas Sizing Equation

$$C_v = (Q / 963)\sqrt{\frac{(SG)(T)}{(\Delta P)(P1 + P2)}}$$

C_v	Flow Coefficient
Q	Gas Flow Rate, (SCFH)
SG	Specific Gravity
P1	Inlet Pressure (PSIA)
P2	Outlet Pressure (PSIA)
Δ P	Pressure Drop, (PSI)
T	°Rankin (°F +460)

Useful Conversions for Gas Flow		
To Convert	Multiply By	To Obtain
SCFD	0.04167	SCFH
SCFS	3600	SCFH
SCFM	60	SCFH
M^3/Hr.	35.34	SCFH
Lb./Hr.	19.52	SCFH
Kg./Hr.	43.04	SCFH

P119 Dimensions

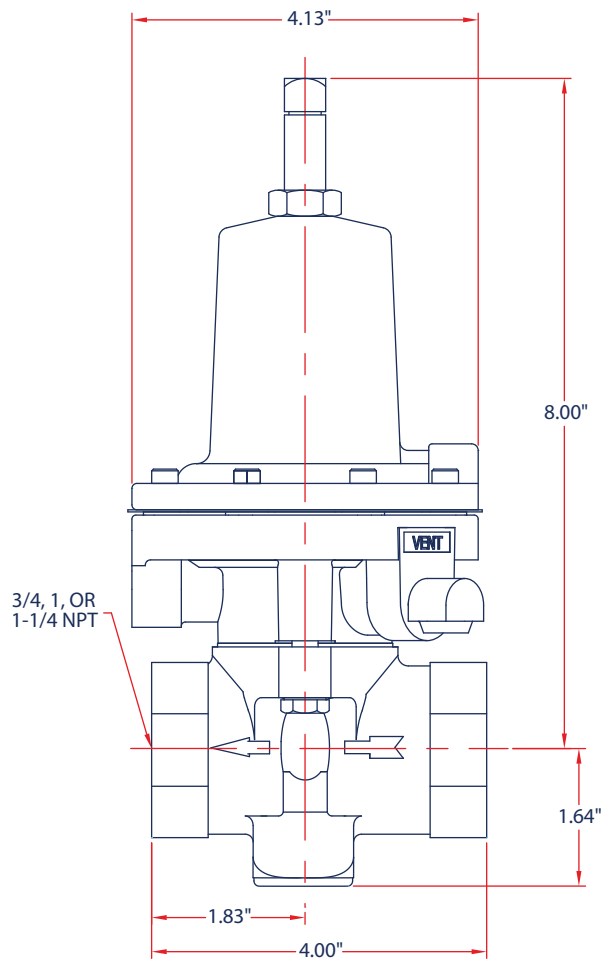

P119 Parts

Item	Description		Qty.	Part Number
1	Adjustment Screw		1	648-487-000
2	Lock Nut		1	634-179-000
3	Spring Guide		1	626-079-000
4	Range Spring	3-15 PSIG, Red	1	655-689-000
		5-20 PSIG, Silver		655-676-000
		5-35 PSIG, Blue		655-703-000
		30-60 PSIG, Green		655-690-000
5	Screen		1	647-023-000
6	Machined Bonnet		1	604-237-000
7	Housing		1	629-226-000
8	Bushing		2	608-074-000
9	Stem Wiper		2	649-305-000
10	Seat Assemblies Aluminum	Aluminum/Nitrile for 1/8" to 3/8" Orifice	1	822-023-000
		Aluminum/Fluorocarbon for 1/8" to 3/8" Orifice		822-023-001
		Aluminum/Nitrile for 1/2" & 9/16" Orifice		822-023-002
		Aluminum/Fluorocarbon for 1/2" & 9/16" Orifice		822-023-003
11	Seat Assemblies Stainless	316SS/Nitrile for 1/8" to 3/8" Orifice	1	822-024-000
		316SS/Fluorocarbon for 1/8" to 3/8" Orifice		822-024-001
		316SS/Neoprene (Low Temp) for 1/8" to 3/8" Orifice		822-047-000
		316SS/Nitrile for 1/2" & 9/16" Orifice		822-024-002
		316SS/Fluorocarbon for 1/2" & 9/16" Orifice		822-024-003
		316SS/Neoprene (Low Temp) for 1/2" to 9/16" Orifice		822-047-001
12	O-ring, (Stem)	Nitrile	2	649-303-001
		Fluorocarbon		649-304-001
13	Retaining Ring		2	644-057-000
14	Hair Pin - NACE		1	635-066-000
15	Orifice Aluminum	1/8"	1	688-013-004
		3/16"		688-013-003
		1/4"		688-013-002
		5/16"		688-018-000
		3/8"		688-013-001
		1/2"		688-013-000
		9/16"		688-018-001
16	Orifice 316 Stainless Steel	1/8"	1	688-014-004
		3/16"		688-014-003
		1/4"		688-014-002
		5/16"		688-019-000
		3/8"		688-014-001
		1/2"		688-014-000
		9/16"		688-019-001
17	Body	Steel - 3/4 NPT	1	664-320-000
		Steel - 1 NPT		664-320-001
		Iron - 3/4 NPT		664-318-000
		Iron - 1 NPT		664-318-001
		Iron - 1-1/4 NPT		664-319-000
		LCC - 1 NPT		664-392-001
18	Build Screws		8	648-466-004
19	O-ring, (Housing)	Nitrile	1	649-303-000
		Fluorocarbon		649-304-000
20	Vent Assembly		1	836-004-000
21	Body Bolts	Iron Body	2	648-463-005
		Steel Body		648-463-008
22	NACE Tag (Not Shown)		1	632-503-000
23	Lock Nut		1	634-180-000
24	Stem	Aluminum	1	651-098-000
		Stainless Steel		651-099-000
25	Washer, Flat		1	662-213-001
26	Washer		1	662-213-000
27	Dia-phragms	Nitrile	1	618-074-000
		Fluorocarbon		618-074-001
28	Piston		1	637-306-000
29	Spring Retainer		1	643-191-000
30	Belleville Washer		1	662-212-000
31	Washer, StatOSeal	Nitrile	1	662-214-000
		Fluorocarbon		662-214-001
32	Disk, Teflon Fluorocarbon		1	619-056-000
33	Blank Label, Brady (Not Shown)		1	632-456-000

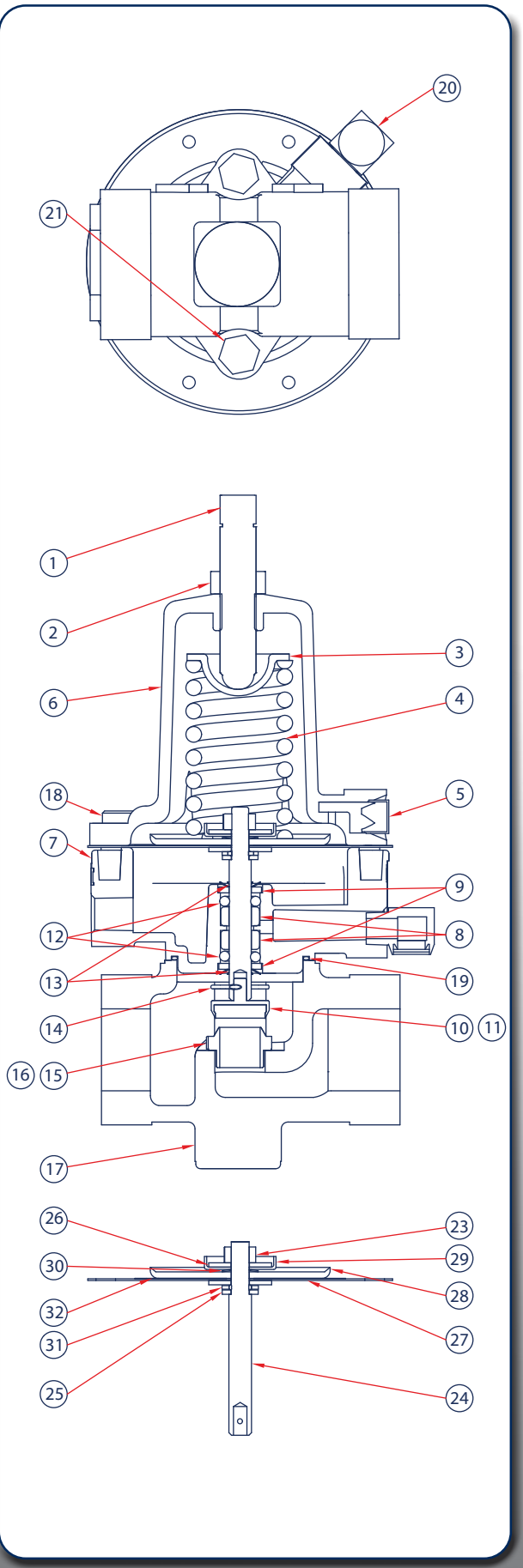

P289RC Exhaust Booster

The P289RC is designed as a high capacity exhaust booster and used in applications utilizing large pneumatic actuators and valve controls where a rapid response is required. Ideally suited in applications with surge valves or recycle valves on compressor stations where the operation is sped up to accommodate compressor surges and sudden pressure changes from the out devices.

The 1/4" spring case port is connected to the controlling instrument such as an I/P, Controller or Positioner, and the 1" supply/relief port is connected to the actuator. It is required for proper operation that a bypass valve connect the inlet and outlet of the P289RC wherever is convenient.

The greater the differential pressure develops across the bypass valve the further the exhaust booster opens. The factory set opening of the P289RC is approximately 1.5 PSIG and is not adjustable in the field. As the differential pressure decreases between the controlling instrument and the actuator, the booster exhaust valve closes.

Materials of Construction

	P289RC 1" & 3/4" x 1"
Body, Bonnet	Aluminum
Diaphragm	Nitrile or Fluoroelastomer
Gaskets	Composite
O-rings	Nitrile or Fluoroelastomer
O-ring Piston and Spacer	Aluminum
Stem	Aluminum
Spring	Zinc-plated steel
Diaphragm Piston	Zinc-plated steel

Specifications

	P289RC 1" & 3/4" x 1"	
Port Size	1 NPT	
Maximum Relief Inlet Pressure	150 PSIG	8.6 BAR
Temperature Range	-20–150 °F with Nitrile and Neoprene	
	0–300 °F with Fluoroelastomer	
Approximate Weight	3 lbs.	1.36 kg
Exhaust Max Rate	C_v=22	107,988 scfh

P289RC 1" Part Matrix

P289RC			000000	
				Body Size
	07			3/4" x 1" NPT
	08			1" NPT
				Diaphragm Material
		0		Nitrile
		1		Fluoroelastomer

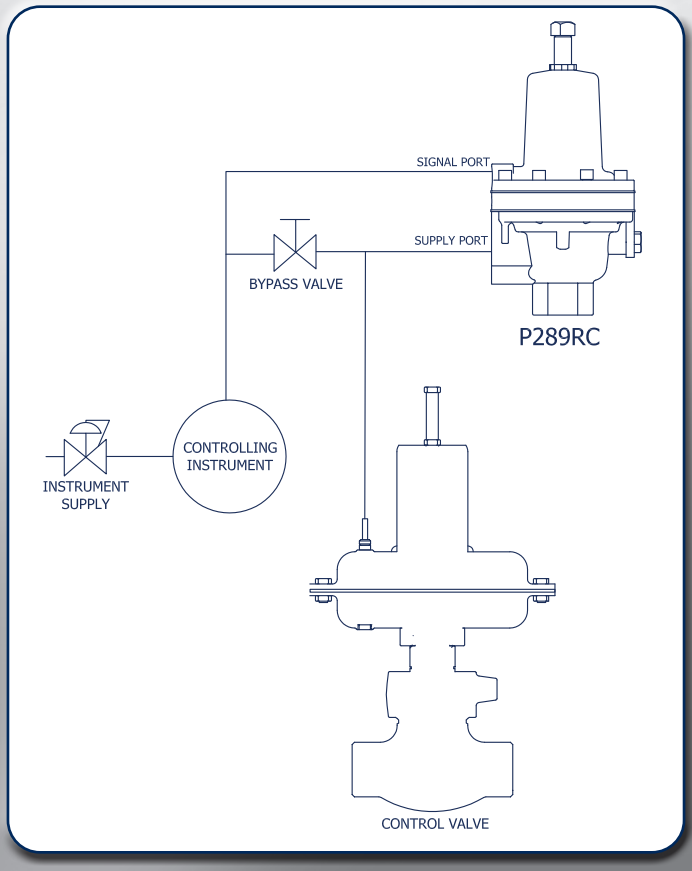

P289RC 1" Parts

Item	Description		Qty.	Part Number
1	Body, Aluminum	1" NPT	1	664-295-000
		3/4" x 1" NPT		664-386-000
2	Stem, Aluminum		1	689-022-000
3	O-ring	Nitrile	2	649-000-003
		Fluorocarbon		649-000-343
4	O-ring	Nitrile	1	649-293-000
		Fluorocarbon		649-293-001
5	O-Ring Piston, Aluminum		1	637-311-000
6	Spacer Tube, Stainless Steel		2	654-194-000
7	Pipe Plug, Plated Steel		1	639-099-000
8	Stem Guide Assembly		1	814-019-000
9	Diaphragm	Nitrile	2	600-497-000
		Fluorocarbon		600-497-001
10	Spacer Ring, Aluminum		1	654-195-000
11	Large Piston, Plated Steel		1	637-306-000
12	Machine Screw		7	648-466-010
13	Small Piston, Plated Steel		2	637-319-000
14	Lower Spring Retainer, Zinc Plated Steel		1	643-191-000
15	Hex Nut, Plated Steel		1	634-162-000
16	Spring, Stainless Steel		1	655-790-000
17	Screw Seal, Nitrile		1	662-245-000
18	Hex Nut, Plated Steel		1	634-154-000
19	Adjusting Screw, Plated Steel		1	648-585-000
20	Spring Guide, Plated Steel		1	626-079-000
21	Bonnet, Aluminum		1	604-237-000
22	Gasket, Composite		3	624-062-000
23	Spacer, Stainless Steel		1	654-196-000
24	Screen, Stainless Steel		1	647-029-000
25	Washer, Steel		1	662-204-000
26	Machine Screw, Stainless Steel		2	648-488-000
27	O-Ring Spacer, Aluminum		1	654-177-000
28	Gasket, Neoprene		1	624-063-000
29	Screen, Stainless Steel		1	647-018-000
30	Retaining Ring, Plated Steel		1	664-051-000
31	Adjustment Scew		1	648-584-000
	Diaphragm Assembly	FKM	1	804-295-000
		Nitrile	1	804-295-001
	Rebuild Kit	FKM	1	971-289-010
		Nitrile	1	971-289-011

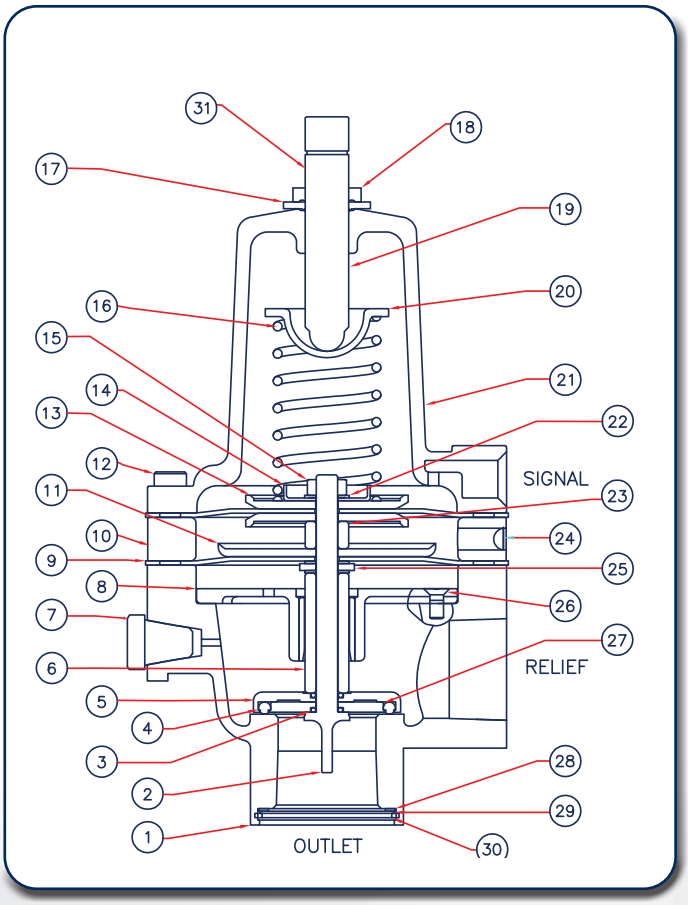

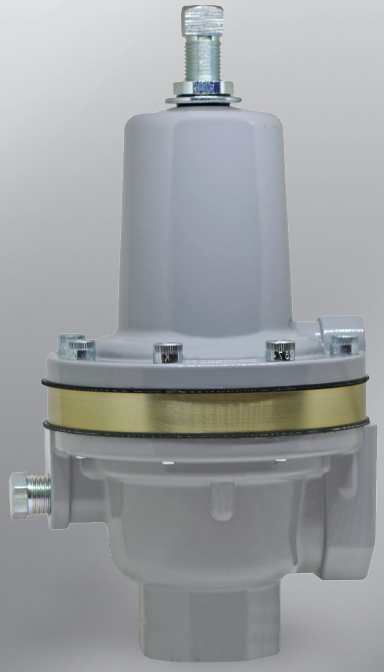

P289RC 1" Dimensions

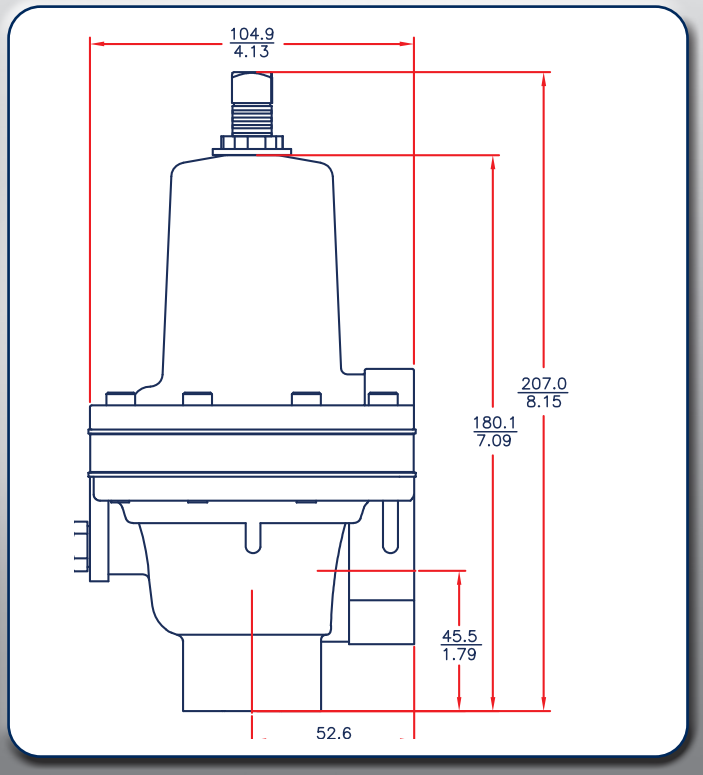

T75 Air Relays

Features

The Type 75 relay uses signal pressure to accurately control output pressure over a wide range of flow and supply pressure variation.

Under varying flow conditions output pressure is maintained by use of an aspirator tube, which adjusts the air supply valve opening in accordance with the flow velocity. A balanced supply valve, utilizing a rolling diaphragm, makes the relay virtually immune to changes in supply pressure. Maintenance is simple due to the unit construction, and the relay can be serviced without removing it from the line. Signal to output pressure ratios of 1:1, 1:2, 1:4 and 1:6 are available. Maximum output is 150 PSIG (10.3 BAR).

Applications

- Volume Boosting
- Gas Flow Control
- Valve Motor Loading
- Temperature Range -40˚F to +200˚F

Models

Type 75

The basic relay offers excellent precision along with high forward flow rates.

Type 75 High Relief Relays

These relays provide extra fast "blow-down" for very rapid release of output pressure. The extra relief feature makes this relay suitable for cylinder return stroke actuation, air hoists, and similar applications requiring fast exhaust.

To calculate negative bias relay output:

Relay output = (signal pressure) - 4 PSI bias x (relay ratio factor) where the relay ratio factor is defined as follows:

Relay Ratio	Factor
1:1	1
1:2	2
1:4	4
1:6	6

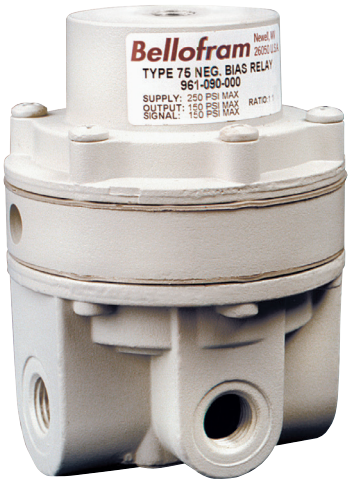

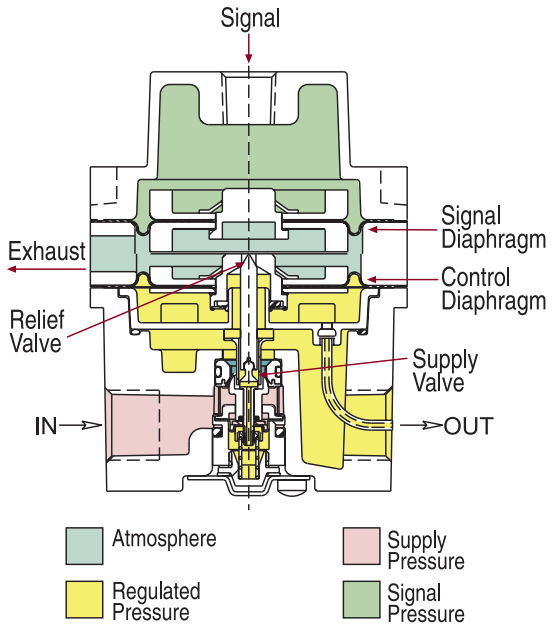

Type 75 Dimensional Drawing

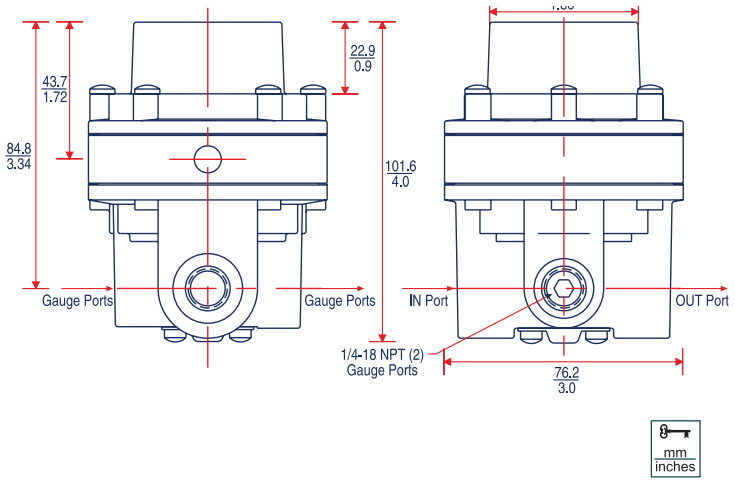

P79 High Flow Air Relays

The P79 1:1 Ratio High Flow Precision Air Relay brings additional precision and control to the BelGAS line of precision control products.

The P79 relay is designed for applications where a precise control of flow is needed. This regulator offers low droop, high accuracy and fine adjustment sensitivity. The use of a rolling diaphragm provides greater sensitivity and improved accuracy. The balanced pintle minimizes output pressure changes caused by fluctuations in supply pressure.

A version of the P79 for valve control applications is available. The P79 utilizes soft exhaust seats to minimize air consumption, increased deadband to ignore valve oscillations, and an integral bypass valve that can be 'tuned' for optimum valve response.

Applications

- Gas Flow Control
- Volume Boosting
- Valve Motor Loading
- Temperature Range -40˚F to +200˚F

Standard P79 - Integral bypass valve no bleed, relieving diaphragm.

Metal Seat P79 - Relieving unit with bleed, no bypass valve - better sensitivity.

P79HR - same as Metal Seat P79 but with 25% more exhaust capacity.

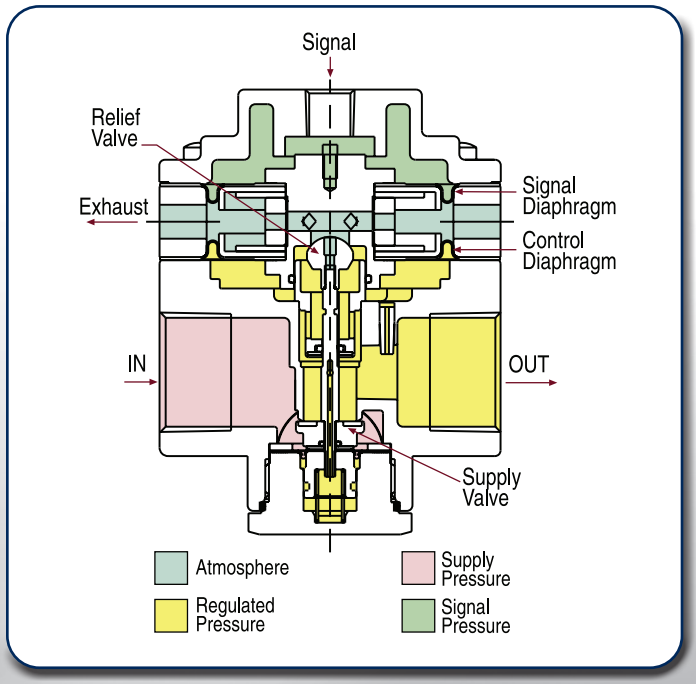

Type 75 Dimensional Drawing

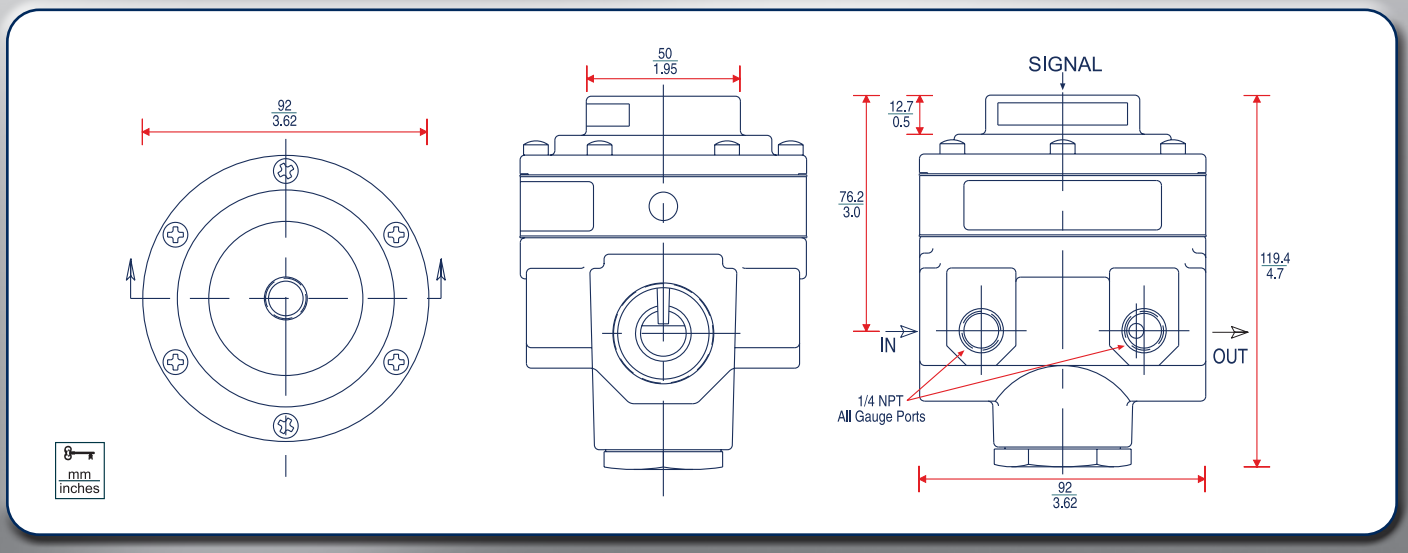

	Type 75	Type 75 HR	P79 (Metal Seat)	Type Standard P79 (w/Bypass Valve)
Maximum Supply Pressure	250 PSIG (17.2 BAR)	250 PSIG (17.2 BAR)	400 PSIG (27.6 BAR)	400 PSIG (27.6 BAR)
Sensitivity	1/4" H_2O (6.4mm)	1/4" H_2O (6.4mm)	1" H_2O (25mm)	Dead Band <0.4 PSIG
Supply Pressure Sensitivity	< 0.6 PSIG (0.04 BAR) per 50 PSIG (6.9 BAR) change in supply pressure	< 0.6 PSIG (0.04 BAR) per 50 PSIG (3.5 BAR) change in supply pressure	<0.35 PSIG (0.02 BAR) per 100 PSIG (3.5 BAR) change in supply pressure	<0.50 PSIG (0.02 BAR) per 100 PSIG (3.5 BAR) change in supply pressure
Flow Capacity	40 SCFM (1150 LPM) @ 20 PSIG (1.4 BAR) signal and 100 PSIG (6.9 BAR) supply	40 SCFM (1150 LPM) @ 20 PSIG (1.4 BAR) signal and 100 PSIG (6.9 BAR) supply	>125 SCFM (3500 LPM) @ 20 PSIG (1.4 BAR) signal and 100 PSIG (6.9 BAR) supply	>125 SCFM (3500 LPM) @ 20 PSIG (1.4 BAR) signal and 100 PSIG (6.9 BAR) supply
Exhaust Capacity	6 SCFM (170 LPM) @ 10 PSIG (0.69 BAR) above a 20 PSIG (1.4 BAR) setpoint	15 SCFM (425 LPM) @ 10 PSIG (0.69 BAR) above a 20 PSIG (1.4 BAR) setpoint	31 SCFM (875 LPM) @ 5 PSIG (0.35 BAR) above a 20 PSIG (1.4 BAR) setpoint	31 SCFM (3500 LPM) @ 5 PSIG (0.35 BAR) above a 20 PSIG (1.4 BAR) setpoint
Temperature Limits	-40 to 200˚F (-40 to 93˚C)	-40 to 200˚F (-40 to 93˚C)	-40 to 200˚F (-40 to 93˚C)	-40 to 200˚F (-40 to 93˚C)
Air Consumption	<12 SCFH (5.7 LPM)	<12 SCFH (5.7 LPM)	<12 SCFH (5.7 LPM)	<1 SCFH (5.7 LPM)
Port Size	1/4", 3/8" NPT, BSPP, BSPT	1/4", 3/8", 1/2" NPT, BSPP, BSPT	3/8", 1/2", 3/4", 1" NPT, BSPP, BSPT	3/8", 1/2", 3/4", 1" NPT, BSPP, BSPT
Output Pressure Range	0-150 PSIG (0–10.3 BAR)	0-150 PSIG (0–10.3 BAR)	0-200 PSIG (0-13.8 BAR)	0-200 PSIG (0-13.8 BAR)
Maximum Signal	150 PSIG (10.3 BAR) for 1:1 ratio	150 PSIG (10.3 BAR) for 1:1 ratio	200 PSIG (13.8 BAR)	200 PSIG (13.8 BAR)
Weight	1.3 lb. (0.6 kg.)	1.3 lb. (0.6 kg.)	4.5 lb. (2.0 kg.)	4.5 lb. (2.0 kg.)
Ratio of Accuracy for a 12 psig span	< 2% (1:1)	< 2% (1:1)	<1.5%	<1.5%

Type 75: Regulated Pressure VS. Flow

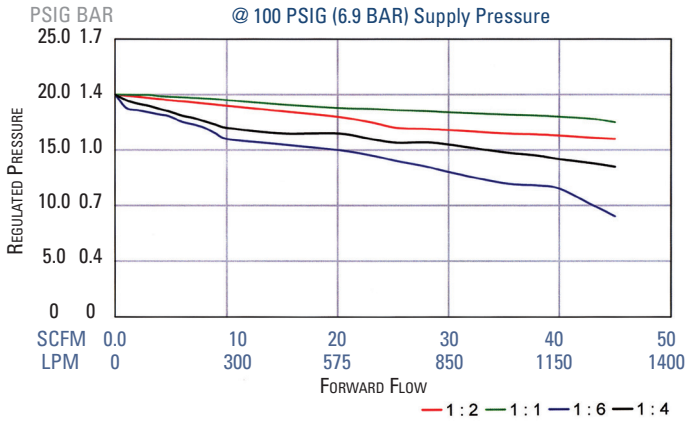

P79 and P79 HR: Regulated Pressure VS. Flow

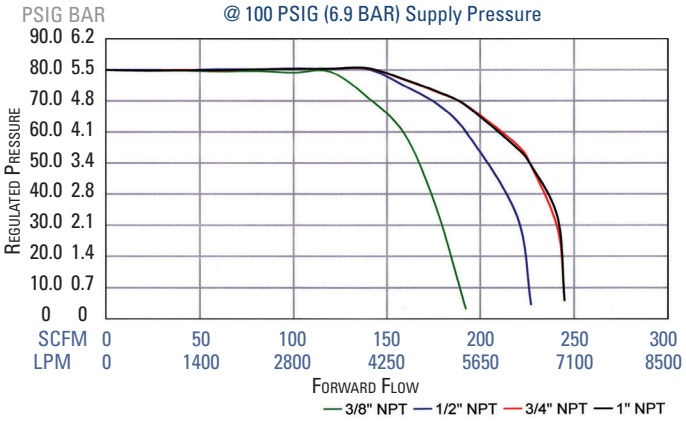

Volume Booster Ordering Information

	Ratio	Port Size (NPT)	Set Point Range		Part Number
			BAR	PSIG	
Type 75 Precision Relay	1:1	1/4	0-10.3	0-150	961-058-000
	1:1	3/8	0-10.3	0-150	961-066-000
	1:2	1/4	0-10.3	0-150	961-059-000
	1:2	3/8	0-10.3	0-150	961-067-000
	1:4	1/4	0-10.3	0-150	961-060-000
	1:4	3/8	0-10.3	0-150	961-068-000
	1:6	1/4	0-10.3	0-150	961-045-000
	1:6	3/8	0-10.3	0-150	961-069-000
Type 75 Precision Relay Fixed Negative Bias (4 PSI)	1:1	1/4	0-10.3	0-150	961-090-000
	1:1	3/8	0-10.3	0-150	961-091-000
	1:2	1/4	0-10.3	0-150	961-092-000
	1:2	3/8	0-10.3	0-150	961-093-000
	1:4	1/4	0-10.3	0-150	961-094-000
	1:4	3/8	0-10.3	0-150	961-095-000
	1:6	1/4	0-10.3	0-150	961-096-000
	1:6	3/8	0-10.3	0-150	961-097-000
Type 75HR Precision Relay	1:1	1/4	0-10.3	0-150	961-144-000
	1:1	3/8	0-10.3	0-150	961-145-000
	1:1	1/2	0-10.3	0-150	961-146-000
	1:2	1/4	0-10.3	0-150	961-147-000
	1:2	3/8	0-10.3	0-150	961-148-000
	1:2	1/2	0-10.3	0-150	961-149-000
Type 75HR Precision Relay Fixed Negative Bias (4 PSI)	1:1	1/4	0-10.3	0-150	961-150-000
	1:1	3/8	0-10.3	0-150	961-151-000
	1:1	1/2	0-10.3	0-150	961-152-000
	1:2	1/4	0-10.3	0-150	961-153-000
	1:2	3/8	0-10.3	0-150	961-154-000
	1:2	1/2	0-10.3	0-150	961-155-000

Type 75 Option Ordering Matrix

Replace last three digits of part number with digits from table below.

Option		5	7
5	Epoxy Finish	005	075
7	Mounting Bracket		007

P79 Ordering Matrix

P079		0		0			
							Body Size
	03						3/8"
	04						1/2"
	06						3/4"
	08						1"
		0					
							Special Construction
			0				None
			2				Tapped Supply Gage Port
				0			
							Configuration
					0		Standard*
					1		Non relief (P79)
					2		No Bypass (P79)
					3		High Relief (P79HR)
							Versions
						0	Standard
						B	w/ Bracket

* A standard configuration P79V, has a bypass valve, soft seat exhaust, epoxy finish and Tapped Vent Ports.

T2000 Explosion Proof I/P & E/P Transducers

- Field-selectable inputs and direct/reverse/split ranging
- Multiple input/output/mounting configurations
- Precise, reliable performance under extreme conditions of temperature, vibration, orientation, supply pressure changes, supply voltage changes, RFI/EMI, humid/oil-laden media, and corrosive surroundings

The T2000EX is a robust electronic instrument that regulates an incoming supply pressure down to a precise output pressure which is directly proportional to an electrical control signal. The secret to the T2000EX's precise, reliable performance under a variety of demanding environmental conditions is a patented piezo-ceramic actuator with many industry-wide firsts.

Applications

- Valve Actuators
- Valve Positioners
- Relay
- Controllers
- Chemical & Petrochemical Industries
- Petroleum Production
- Pipeline Transmission

Principle of Operation

The T2000EX I/P and E/P transducers utilize closed-loop pressure feedback-control for precision pressure output and minimized effects of temperature, supply pressure changes, supply voltage changes, and mounting angle.

Supply pressure is reduced by the supply valve to provide an output pressure which is internally routed to a precision temperature compensated piezo resistive pressure sensor. Supply pressure is also routed to an externally removable orifice which provides a reduced pilot pressure to a chamber containing a servo diaphragm and nozzle. Pilot pressure is controlled by modulating the gap between the face of a nozzle and an adjacent piezo-ceramic actuator, which is part of a unique patented mechanism.

The piezo-ceramic actuator serves as a control link between electrical input and pressure output as follows:

- The input current (I/P) or voltage (E/P) signal is conditioned to provide a normalized control signal directly proportional to the desired pressure output.
- Simultaneously the output of the pressure sensor is amplified and conditioned to produce a feedback signal.
- The sum of the control signal and the feedback signal produce a command signal which is delivered as a DC voltage to the piezo-ceramic actuator.
- As voltage increases, the force applied by the actuator increases, so as to restrict nozzle bleed and thus increase pilot pressure.
- Increased pilot pressure applied to the servo diaphragm directly causes opening of the supply valve and an increase in the output pressure until the output feedback signal and control signal combine to produce the correct command signal.

Air Quality

Instrument-quality air consists of
a. A dew point less than 35˚F
b. No particles larger than three microns
c. Maximum oil content of 1 ppm

Fine-Tuning Your Application

For optimal performance in your application, the calibration of the Type 2000EX can be fine-tuned in the field. An easily-removable cover provides access to the isolated electronics. All potentiometers, connections, jumpers, and switches are clearly marked on the circuit board or on the handy chart located on the inside of the cover. The three elements of calibration (Gain, Zero, and Span) are described below. Consult the T2000EX User's Manual for detailed calibration procedures, cautions, and instrumentation requirements.

Gain (Damping) Adjustment

The output response of the T2000EX can be optimized for varying downstream volumes by adjusting the system gain of the control circuit. Adjust the Gain Pot counterclockwise for increased gain; clockwise for increased oscillation damping. For maximum allowable gain in your application, the pot should be turned clockwise until oscillation just disappears.

Zero & Span Adjustments

The T2000EX contains multi-turn Coarse-Zero, Fine-Zero, and Span adjustment potentiometers which are clockwise positive. Adjustment of either Zero Pot changes the unit's minimum output while the Span Pot changes the maximum output. The adjustments are interactive, so it may take iterations to reach the desired calibration.

Wide Rangeability

The T2000EX can be field calibrated to pressure ranges other than the standard ones by combinations of recalibration, pressure range switching, and split high/low ranging. A unit should not be switched to a range outside its pressure sensor family (eg., 0-15 PSIG can be switched to a 3-15 PSIG, but not to 0-30 PSIG). (Caution: Do not exceed the range of the onboard pressure sensor.) For example, the easiest way to recalibrate a 0-30 PSIG unit to 3-15 PSIG would be to change the switch setting to 3-27 PSIG, then switch to split range low.

Field-Selectable Features

Onboard switches allow the user to easily reconfigure the T2000EX for any of several electrical inputs, direct/reverse acting, or output split-ranging high/low. Fine tuning of the unit's calibration may be necessary after a reconfiguration.

Direct/Reverse Acting

Direct Acting transducers regulate to their minimum output when supplied with minimum input; maximum out with maximum in. Reverse Acting transducers regulate to their maximum output at minimum input.

Split Ranging–High & Low

The T2000EX can be configured to regulate either half (top or bottom) of it's normal output range, when supplied with it's normal full-ranging electrical input. For example, a 0-10V 0-30 PSIG unit set to split range low will regulate 0-15 PSIG @ 0-10V. It will regulate 15-30 PSIG @ 0-10V if set to split range high.

Hazardous Area & Usage Classification

"F" model: Dual Listing of FM/CSA for following approvals:

Explosion Proof: Class I, Division 1, Groups A,B,C,D, T6 @ 60°C Max

Dust Ignition Proof: Class II, III, Division 1, Groups E,F,G; T6 @ 60°C Max

Intrinsic Safety: FM/CSA Class I II III, Division 1, Groups A,B,C,D,E,F,G, T4 @ 60°C Max

Non-incendive: Class I, Division 2, Groups A, B, C, D. T4 @ 60°C Max

Suitable for use in Class II III, Division 2, Groups F, G. T4 @ 60°C Max

Environmental rating: TYPE 4X, IP66

Note: Certified by FM, "F" model can be used in Natural Gas application in US and Canada, merely in a condition that a suitably rated NRTL listed or certified conduit seal is mandatory.

"G" model: Listing of FM for using Natural Gas as a process medium in US and Canada for following approvals:

Explosion Proof: Class I, Division 1, Groups A,B,C,D, T6 @ 60°C Max

Dust Ignition Proof: Class II, III, Division 1, Groups E,F,G; T6 @ 60°C Max

Intrinsic Safety: FM Class I II III, Division 1, Groups A,B,C,D,E,F,G T4 @ 60°C Max

Non-incendive: Class I, Division 2, Groups A, B, C, D. T4 @ 60°C Max

Suitable for use in Class II III, Division 2, Groups F, G. T4 @ 60°C Max

Environmental rating: TYPE 4X, IP66

CE: (Conduit Connector Only) EN 50081-1 Residential, commercial & light industry; EN-50082-2 Heavy Industrial.

T2000 Part Matrix

2K	E								00		
										Electrical Port	
		N								1/2 NPT Conduit	
										Pneumatic Ports	
			N							NPT	
			T							BSPT	
			P							BSPP	
			M							Manifold Mount*	*Bottom O-Ring Ports
										Agency Approval	
				F						FM/CSA	
				G						FM Natural Gas Approval for US and Canada, includes factory conduit seal	
										Electrical Input	
					42					4-20 mA	
					05					0-5 V	
					15					1-5 V	
					19					1-9 V	
					11					1-10 V	
					01					0-10 V	
						D				Direct Acting	
						R				Reverse Acting	
										Pneumatic Output	
							F			Full Range	
							H			Split Range High	
							L			Split Range Low	
										Pressure Ranges	
										PSIG / BAR	
								005		0-5 / 0-0.3	Maximum supply for these pressure ranges is 100 psig.
								015		0-15 / 0-1.0	
								315		3-15 / 0.2-1.0	
								117		1-17 / 0.07-1.2	
								030		0-30 / 0-2.1	
								630		6-30 / 0.4-2.1	
								327		3-27 / 0.2-1.9	
								060		0-60 / 0-4.1	
								100		0-100 / 0-6.9	Maximum supply for these pressure ranges is 140 psig.
								120		0-120 / 0-8.3	
										Specials	
									00	None	

It is mandatory for the user to install a suitably rated NRTL Listed or Certified conduit seal.

Terminal Block	I/P Transducer	E/P Transducer
S	N/C	+ Signal
+	+ Signal	+ Power Supply
-	- Signal	Common

Type 2000 Wiring Connections and Switch Positions

Switch #	1: psig	BAR	2	3	4	5	6: psig	BAR	7	8	9
ON	0-15 3-15 1-17 0-30 3-27 6-30 0-100	0-1.0 0.2-1.0 0.07-1.2 0-2.1 0.2-1.9 0.4-2.1 0-6.9	1-5 VDC 0-5 VDC	Split Low	Voltage Input (E/P)	Split Low or Full	0-15 1-17 0-30 0-60 0-100 0-120	0-1.0 0.07-1.2 0-2.1 0-4.1 0-6.9 0-8.3	Reverse Acting	Full	I/P
Switch #	1: psig	BAR	2	3	4	5	6: psig	BAR	7	8	9
OFF	0-60 0-120	0-4.1 0-8.3	1-9 VDC 0-10 VDC 4-20 mA	Full or Split High	Current Input (I/P)	Split High	3-15 3-27 6-30	0.2-1.0 0.2-1.9 0.4-2.1	Direct Acting	Split Low or Split High	E/P

Mounting Options

Mounting Method	Explosion-Proof (E) Model
In-Line	Yes
Direct Mounting	Side or Bottom Holes
Panel Bracket	Accessory
Valve Bracket – 316SS	Supplied
Pipe Bracket – 316SS	Accessory
DIN-Rail Bracket	Accessory
Manifold Plate	Accessory

Mounting: The Type 2000 can be mounted in-line, or directly to a panel via mounting
holes located in the side and bottom of the unit. In addition, the E model includes a valve-mounting bracket. Kits are available for mounting to panel, valve, pipe, or DIN-Rail. A custom plate is available for mounting of the bottom-ported version to a manifold.
(See Accessories)

Sealing Fittings for FM approved T2000 EX Transducers

Application & Installation
Class I, Divisions 1 & 2

Seals in a Class I hazardous location is to minimize the passage of gases and vapors and prevent the passage of flames from one electrical installation to another through the conduit system. Seals are required to be installed within 18 inches on any conduit run entering an enclosure which contains devices that may produce arcs, sparks or high temperatures.

It is mandatory for a suitably rated conduit seal to be installed with the FM approved T2000 EXP Transducer.

Vertical or Horizontal Seals

All seal housings are approx. 3-1/2" in laying length and 1-1/2" OD

Part Number	Description
SF-04AMM	1/2" Aluminum
SF-04AMF	1/2" Aluminum w/nipple
SF-04IMM	1/2" Iron
SF-04IMF	1/2" Iron w/nipple

Sealing Materials

Per seal housing installed, approx. 1/16 oz of packing fiber is used for the dam and 1.5 oz of compound is used for the seal.

Part Number	Description
SC-4	4 oz. Sealing Compound
SC-8	8 oz. Sealing Compound
FP-4	4 oz. Packing Fiber

Larger quantities of fiber and compound available upon request.

Accessories

	Part Number
Panel Mounting Kit	010-135-000
Valve Mounting Kit – 316SS	010-134-000
2" Pipe Mounting Kit (Valve Mounting Kit is required)– 316SS	010-143-000
DIN Rail Adapter	010-115-000
Manifold Adapter Kit	971-158-000
Filter Kit, 60 microns	010-139-000
Pressure Gauge Kit 15 psig (1 BAR)	010-138-000
Pressure Gauge Kit 30 psig (2.1 BAR)	010-138-001
Pressure Gauge Kit 60 psig (4.1 BAR)	010-138-002
Pressure Gauge Kit 160 psig (11 BAR)	010-138-003

T2000 Specifications

Accuracy	0.1% of full-scale output typical (0.25% guaranteed); includes effects of hysteresis, dead band, and repeatability	
Electrical		
Inputs	Switch-Selectable 4-20mA. 0-5, 1-5, 1-9, 1-10, or 0-10VDC	
Connections	1/2 NPT or 20mm Conduit	
Power Supply	5-28VDC (with voltage inputs only)	
Direct/Reverse Acting	Switch-Selectable	
Pneumatic		
Outputs	PSIG	0-5, 0-15, 3-15, 1-17, 0-30, 6-30, 3-27, 0-60, 0-100, or 120
	BAR	0-0.1, 0-0.3, 0-1.0, 0.2-1.0, 0.07-1.2, 0-2.1, 0.4-2.1, 0.2-1.9, 0-4.1, 0-6.9, 0-8.3
Ports (Input/Output)	1/4 (NPT, BSPT, or BSPP threads) Bottom-ported for Manifold Mounting	
Exhaust	1/8 - 27 NPT	
Ports (Gauge)	1/8 NPT	
Supply	For 0–5 PSIG (0.3 BAR) Through 0–60 PSIG From 5 PSIG (0.3 BAR) above maximum output to 100 PSIG maximum For 0-100 PSIG and 0–120 PSIG Ranges From 5 PSIG (0.3 BAR) above maximum output to 140 PSIG maximum	
Split-Ranging	Switch-Selectable, Full-Range or Split-Range High or Split-Range Low	
Consumption	4 scfh maximum (1.9 LPM)	

Flow Capacity	Range		Sensor		Flow	
	PSIG	BAR	PSIG	BAR	scfm	LPM
	0-5	0-0.3	5	0.3	11	312
	0-15	0-1.0	15	1.0	15	423
	3-15	0.2-1.0	15	1.0	15	423
	1-17	0.07-1.2	15	1.0	15	423
	0-30	0-2.1	30	2.1	15	423
	3-27	0.2-1.9	30	2.1	15	423
	6-30	0.4-2.1	30	2.1	15	423
	0-60	0-4.1	50	3.5	15	423
	(Typical Flow @ 100 PSIG (6.9 BAR) in and maximum out)					
	0-100	0-6.9	100	6.9	21	595
	0-120	0-8.3	100	6.9	21	595
	(Typical Flow @ 140 PSIG (9.7 BAR) in and maximum out)					

Exhaust Capacity	3 SCFM (85 LPM) @ 5 PSIG (0.3 BAR) above setpoint (0-15 PSIG range unit set at mid range)
Stability	
Supply Voltage Effect	None
Supply Pressure Effect	None
Vibration Effect	<1% FS (+/-1G; 5-1000Hz)
Mounting Position Effect	None
RFI/EMI	CE-Compliant
Temperature Effect	0.02% FS/°F (-40° to 180°F [-40° to 82°C])
Storage Temperature	-40°to 200°F (-40 to 93°C)
Approximate Weight	3.0 lbs, 1.35 kg

Type 2000 Explosion Proof Dimensions

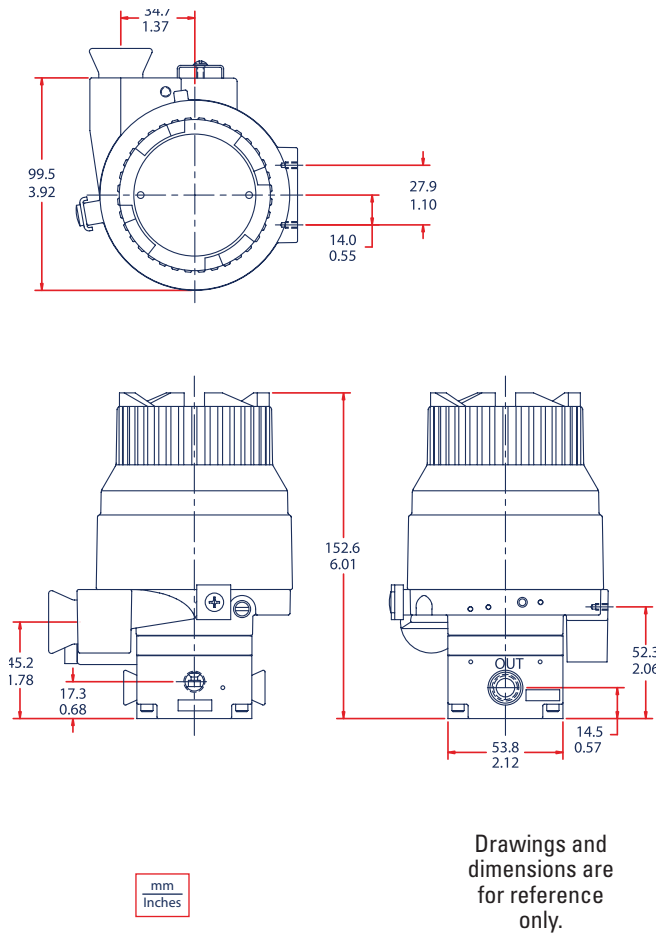

mm
Inches

Drawings and dimensions are for reference only.

REGULATED PRESSURE VS. FLOW

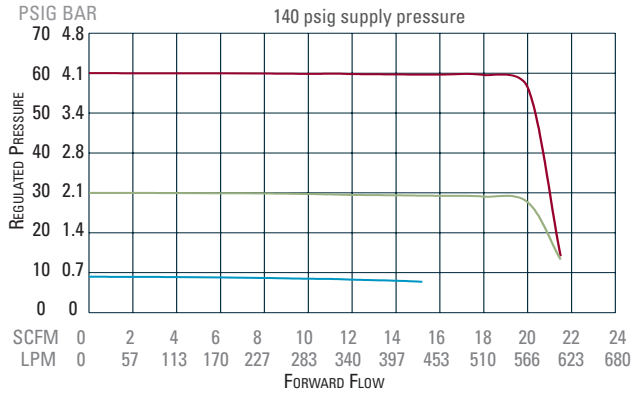

T2000 Agency Approvals

Factory Mutual

2K-ENaFbcde-00, T2000 I/P & E/P Transducers
XP/I/1/ABCD/T6 Ta=60°C;DIP/II,III/1/EFG/T6 Ta-60°C;Type 4X, IP66
IS/I,II,III/1/ABCDEFG/T4 Ta=60°C – 990-438-000; Entity; Type 4X, IP66
Non-Incendive/I/2/ABCD/T4 Ta=60°C; S/II/2/FG/T4 Ta=60°C; S/III/2/T4 Ta=60°C; Type 4X, IP66
Entity Parameters:
Input option b=42;
Vmax = 30 V, Imax = 200 mA, Pmax= 1 W, Ci=0, Li=0
Input option b=01, 05, 11, 15, or 19
Vmax = 30 V, Imax = 100 mA, Pmax= 0.75 W, Ci=0, Li=0
a= Pneumatic ports
b= Input 01, 05, 11, 15, 19, or 42
c= Action D or R
d= Pneumatic Range F, H, or L
e= Pneumatic output 005, 015, 030, 060, 100, 117, 120, 315, 327, 630
Special Conditions of use:
The T-2000 is not for use with natural gas or other non-inert gases as a process medium.

2K-ENaGbcde-00, T2000 I/P & E/P Transducers
XP/I/1/ABCD/T6 Ta = 60°C
DIP/II,III/1/EFG/T6 Ta = 60°C; Type 4X, IP66
a= Pneumatic ports
b= Input 01, 05, 11, 15, 19, or 42
c= Action D or R
d= Pneumatic Range F, H, or L
e= Pneumatic output 005, 015, 030, 060, 100, 117, 120, 315, 327, 630
Special Conditions of use:
The T-2000 is for use with natural gas or other non-inert gases as a process medium up to a maximum input pressure of 140psi when installed with suitable NRTL Listed, Certified, or Approved conduit seal installed at the enclosure.

Canadian Standards Association

Explosion Proof: Class I, Division 1, Groups A, B, C, & D; Class II, Groups E, F, & G; Class III.
Rated: 28 Vdc, 8mA; T-code T6; Enclosure Type 4X, IP66; Max Ambient Temperature: +60°C

Intrinsically Safe, Entity – For Hazardous Locations: Class I, Divisions 1 & 2 Groups A to D; Class II Division 1 Groups E, F, &G; Division 2 Groups F & G; Class III Hazardous Locations
Rated: 28 Vdc, 8mA; T-code T6; Enclosure Type 4X, IP66;
Max Ambient Temperature: +60°C.
Intrinsically Safe when installed per drawing 990-438-000.
Two sets of entity parameters may be used in the installation of this product.
Entity Parameters
I/P: Vmax = 30 V, Imax = 200 mA, Pmax = 1.0 W, Ci = 0mF, Li = 0mH
E/P: Vmax = 30 V, Imax = 100 mA, Pmax = 0.75 W, Ci = 0 mF, Li = 0 mH

CE Marking

The Type 2000 I/P or E/P transducers were tested and found to comply with the EMC directive 2004/108/EC. Compliance is based on the non-harmonized standards EN50081-1:1991 and EN50082-2:1994 along with a technical review against the harmonized standards EN61000-1:2007 and EN61000-2:2005 which showed that there were no changes which materially affected the "state of technological progress" with respect to the product.

It is mandatory for the user to install a suitably rated NRTL Listed or Certified conduit seal

T5000

P/I Transducers

Description

The Type 5000 series is a compact, rugged and reliable family of two-wire pressure transmitters designed for industrial field service. These instruments convert a signal pressure input into a precise 4-20 or 10-50mA output. The lightweight transmitter housing includes a 1/4 NPT pressure port and a 1/2 NPT conduit port for field wiring. Connections are easily accessible simply by removing the top cover. Zero and span adjustments are available within the field wiring compartment for fine, on-site calibration adjustment.

The Type 5000 uses a unique, temperature compensated piezo resistive sensor suitable for gauge pressure measurement of non-corrosive liquids and gases. The sensor has excellent dynamic response and is virtually insensitive to mounting orientation and ordinary industrial vibration. Mounting holes on the transmitter housing are arranged to permit direct pipe (2") mounting for minimum installed cost.

Features

- 0.1% accuracy typical
- Piezo resistive pressure sensor resists vibration
- Mounts at any angle
- Easily accessible zero and span adjustments
- NEMA 4X housing approved for explosion proof service

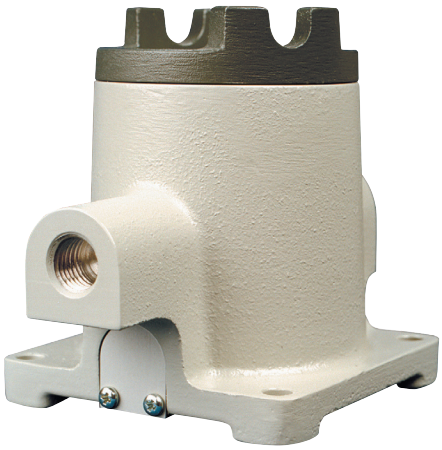

Type 5000 Functional Diagram

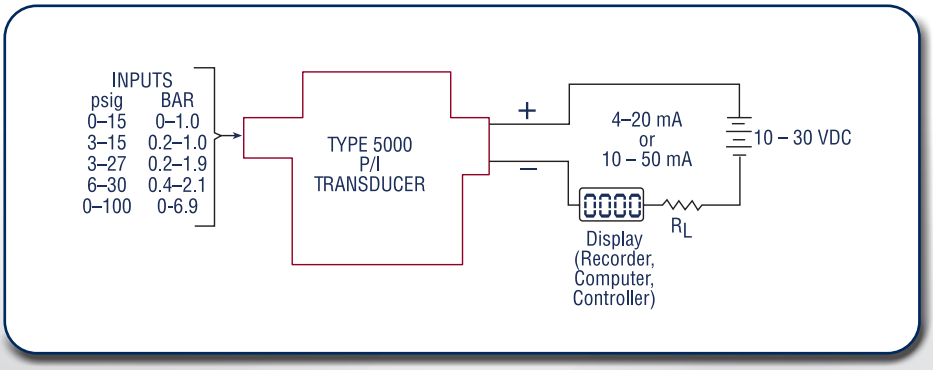

TYPE 5000:
Max Load Resistance VS. Supply Voltage

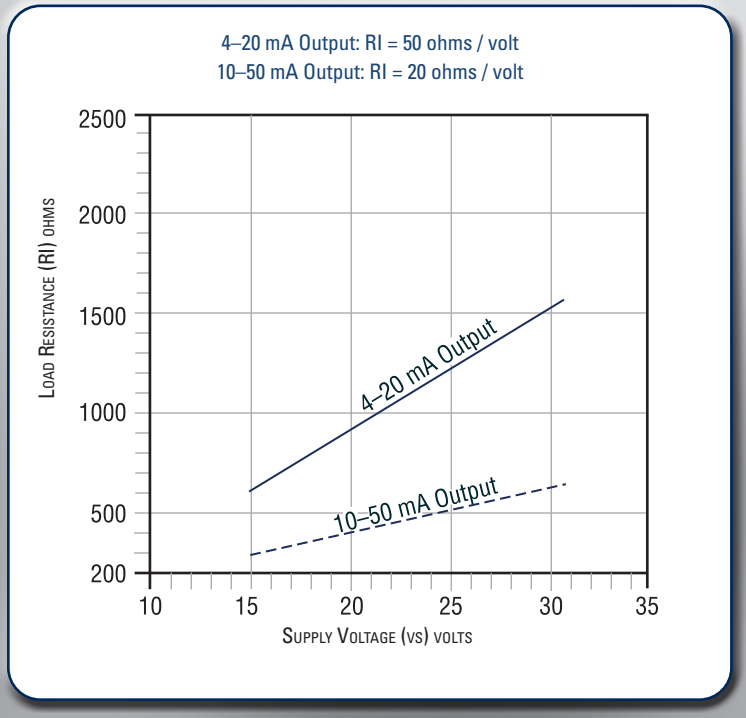

Agency Approval Notes

Factory Mutual
T-5000 P/I Transducers NEMA 4X
Explosion Proof: Class I, Division 1, Groups B, C, & D, T6
Dust-Ignition Proof: Classes II & III, Division 1, Groups E, F, & G, T6,
Type 4X **NEMA 4X**

Canadian Standards Association
T-5000 P/I Transducers
Hazardous Locations:
Class I, Groups B, C & D; Class II, Group E, F & G; Class III; Encl **4**
NEMA 4:
P/I transmitter, rated output 4-20mA dc or 10-50mA dc, power supply 30V dc max.

The Bellofram T-5000 Transducers were tested and found to comply with Electromagnetic Compatibility Directive effective January 1, 1996. The relevant EMC specifications tested were the following: EN 50081-1 (1992) and EN 50082-1 (1992). A Technical Construction File, Serial #107 was written and Certificate of Conformity issued by a Competent Body

Type 5000 Dimensions

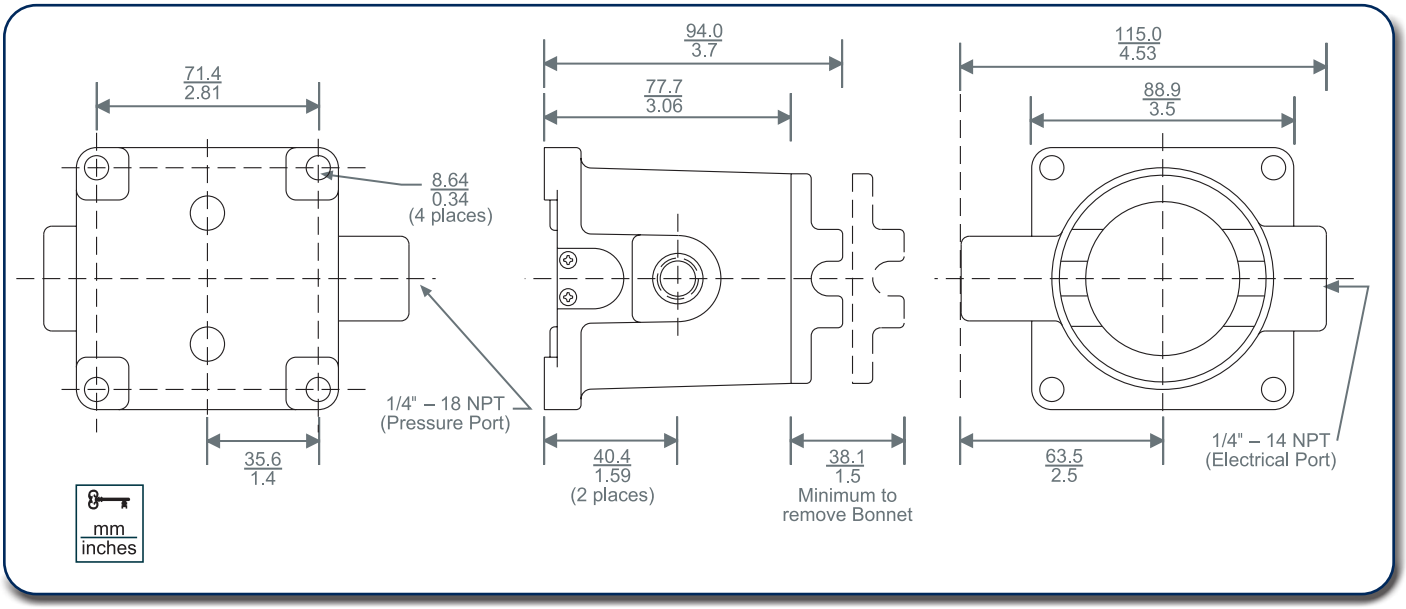

Type 5000 Specifications

Input signal	0–15 PSIG	0–1.0 BAR
	3–15 PSIG	0.2–1.0 BAR
	3–27 PSIG	0.2–1.9 BAR
	6–30 PSIG	0.4–2.1 BAR
	0.2–1.0 BAR	3–15 PSIG
	0–100 PSIG	0–6.9 BAR
Output Signal	4–20 mA DC, 2 wire	
	10–50 mA DC, 2 wire	
Output Protections	Reverse polarity protected	
Accuracy includes nonlinearity, hysteresis and non-repeat-ability	± 0.1% span typical; ± 0.25% span max.	
Overpressure	45 PSIG (3.1 BAR) without calibration shift 60 PSIG (4.1 BAR) without failure	
Allowable Loads	See Graph	
Response Time	Less than 10 msec for step change to 99% R	
Temperature Range-Operating	-40˚F to +180˚F (-40˚C to +82˚C)	
RFI Effect	Less than 1% R at 10V/meter per SAMA PMC 33.1, 2-abc	
Power Supply	12–30 VDC	
Power Supply Effect	Less than 0.005% per volt change at the input terminals within specified power supply limits	
Calibration Adjustments	Multi-turn Zero and Span potentiometers with ± 25% min. adjustment	
In-Process Output Monitor-ing	Via test jacks within enclosure without disturbing field wiring	
Connections	1/4 – 18 NPT female pressure input, 1/2 – 14 NPT female electrical output	
Mounting	Suitable bracket or optional 1/4–20 U-bolt pipe mounting kit (P/N 971-109-000)	

Type 5000 Ordering Information

9	6	4			1		
							Input
			0				0–15 PSIG (0–1.0 BAR)
			1				3–15 PSIG (0.2– 1.0 BAR)
			2				3–27 PSIG (0.2–1.9 BAR)
			3				6–30 PSIG (0.4–2.1 BAR)
			4				0.2–1.0 BAR (3–15 PSIG)
			5				0–100 PSIG (0–6.9 BAR)
							Output
				0			4–20 mA
				1			10–50 mA
							Agency Approval
					1		X /P FM/CSA
							Options
						000	None
						001	Pipe Clamp Mounting Kit

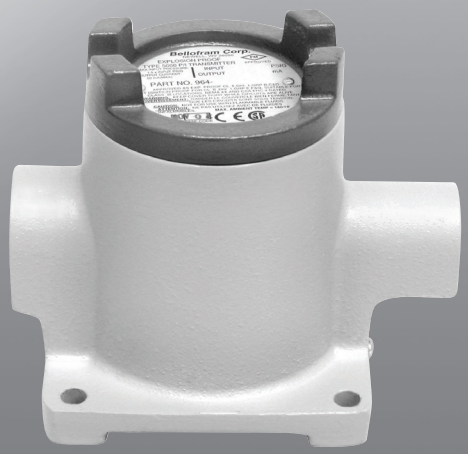

T170 Explosion Proof Motorized Regulator

- High Flow Capacity
- Power Is Not Required for Operation
- Explosion Proof
- Field Adjustable Limit Switch

The Type 170 Motorized Pressure Regulator (M/P) is an electronic pressure regulator designed for use in Hazardous Area valve control in the Oil and Gas industry.

The T170 utilizes a DC Stepper Motor to turn a gear-driven range screw, which compresses the range spring on a Type 70 Precision Pressure Regulator. User-adjustable limit switches prevent motor operation beyond desired pressure limits. The T170 provides powerful speed-turning capabilities. Ultra-slow speed provides up to 13,000 steps full-scale for super-fine DC-stepper resolution. Fast speed provides 10-second Open/Close operation.

Applications

- Custody Transfer
- Remote Low-power Valve Control
- Fine Resolution Valve Control
- Oil & Gas Custody Transfer Stations
- Oil & Gas Well-Heads

Specifications

	T170
Power	12-24 VDC
Signal (applied to either INCREASE or DECREASE wires)	12-24 VDC
Maximum Supply Pressure	150 psig
Output Pressure Range	0.5-30 psig
Flow Capacity (100 psig supply; 20 psig setpoint)	40 SCFM
Exhaust Flow Capacity (5 psig over 20 psig setpoint)	15 SCFM
Weight	7.25 lbs.

Hazardous Area & Usage Classification

Explosion proof for Class I, Division 1, Groups B, C and D; Dust-ignitionproof for Class II, III, Division 1, Groups E, F and G hazardous (classified) locations, with an environmental rating of Type 4X, IP66. For use with air or natural gas at a maximum operating supply pressure of 150 PSI.

XP/I/1/BCD/T3C Ta = 85˚C;
DIP/II/III/1/EFG/T3C Ta = 85˚C; Type 4X, IP66

Part Numbers

		Part Number
T170	1/4 NPT Port	960522000
	3/8 NPT Port	960523000
	1/2 NPT Port	960524000

Mounting Kits

	Part Number	
Valve Mounting Kit*	010 134 000	* Valve Mounting Kit comes standard with each unit
2" Pipe Mounting Kit	010 143 000	
Panel Mounting Kit	010 135 000	

Port Sizes

Pneumatic Ports	"In" & "Out" Ports 1/4, 3/8, or 1/2 NPT
	Gauge Ports 1/4 NPT
Electrical Conduits	3/4" NPT

T170 Application Drawing

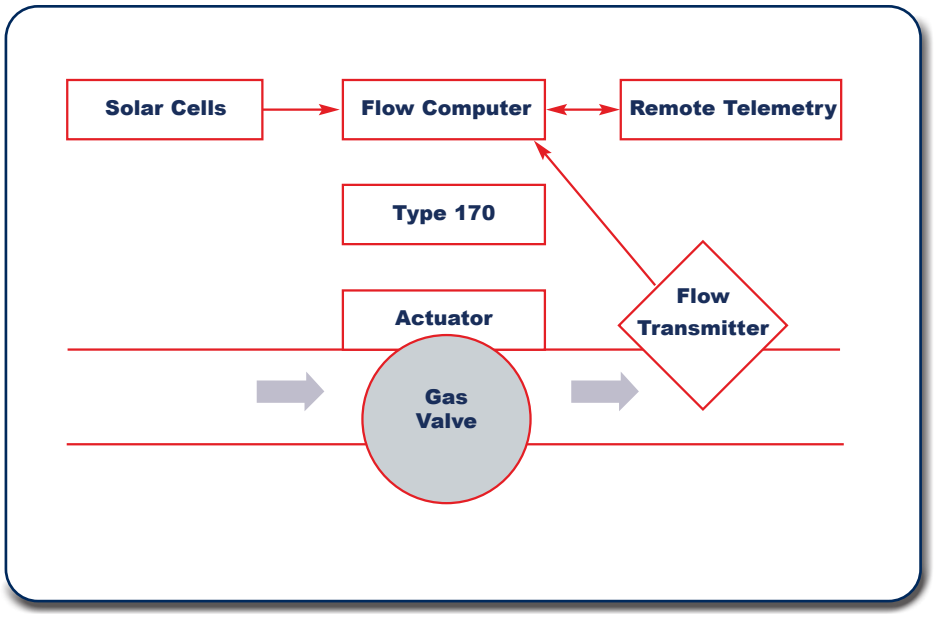

T170 Dimensions

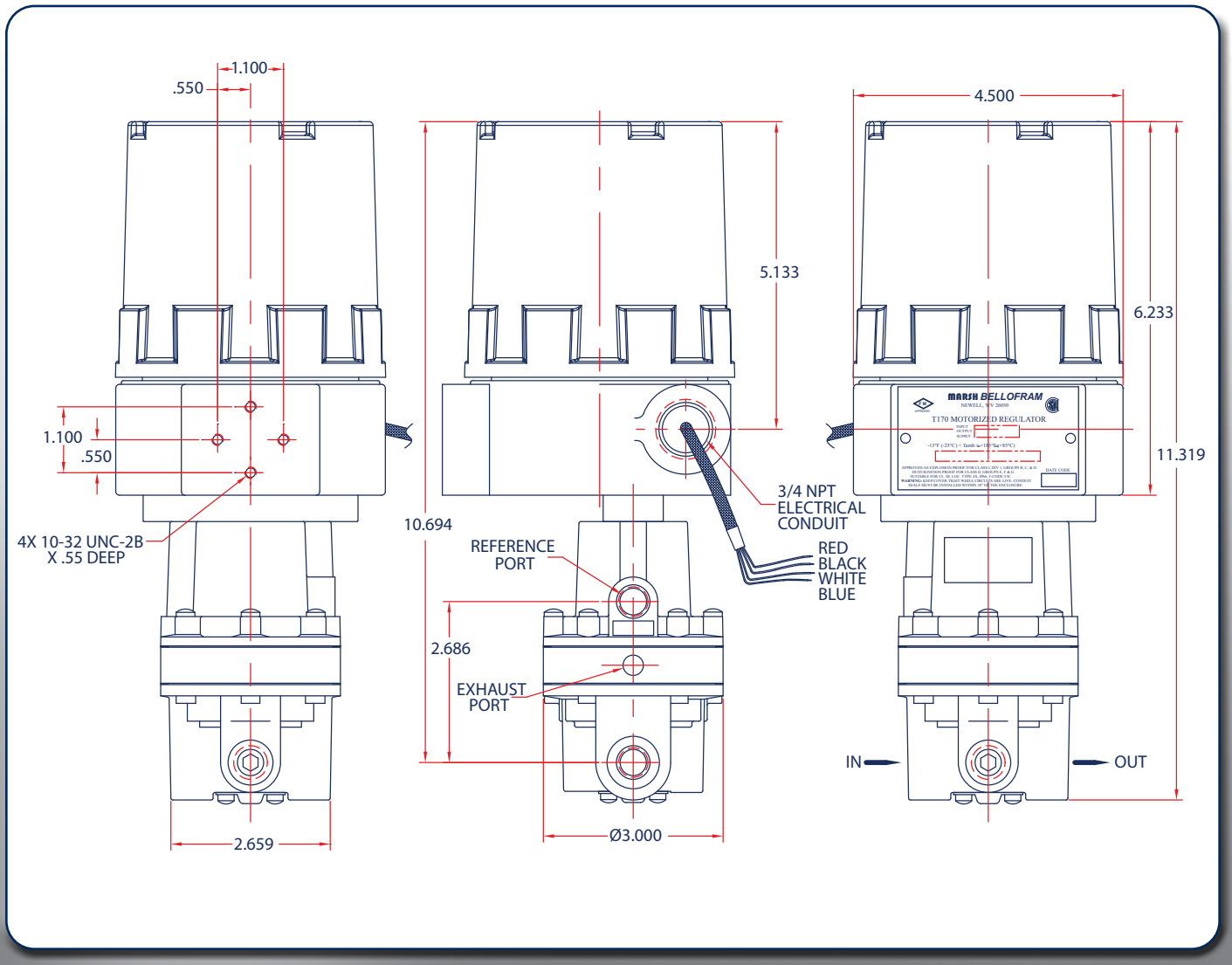

Marsh Instruments

Marshalltown Value Series Gauge

- ASME Grade B Accuracy
- Extra Savings with Quantity Pricing
- 4 Standard Mounting Options: LM, CB, Right & Left (1.5" Only)

Marshalltown Value Series are the most economical, general purpose gauges in the Marsh gauge line. Suited for use with water, oil, air, gas, or other non-corrosive media.

Typical applications include FRL's, compressors, pumps, boilers, regulators, dryers as well as commercial and industrial equipment.

Specifications

Accuracy	ASME Grade B = ±3/2/3% (±2% of range across middle half of scale)							
Case Material	Drawn steel, pretreated for rust resistance and black enamel finish							
Tube & Socket	Copper alloy tube soft soldered to brass socket							
Movement	Brass sector and pinion							
Dial Standard	Dual scale PSIG and kPa							
Dial Color	Black markings on white							
Pointer	Aluminum, Black painted							
Window & Ring	Flat plastic window with steel friction ring							
Case Size	1-1/2"				2"			
Mounting/Case Style	LM	CB	Right	Left	LM	CB	LM	CB
Connection	1/8 NPT	1/8 NPT	1/8 NPT	1/8 NPT	1/4 NPT	1/4 NPT	1/8 NPT	1/8 NPT
0 to 15 PSI		GG1515C8						
0 to 30 PSI	GG1530L8	GG1530C8	GG1530G8	GG1530F8	GG2030L4	GG2030C4	GG2030L8	GG2030C8
0 to 60 PSI	GG1560L8	GG1560C8	GG1560G8	GG1560F8	GG2060L4	GG2060C4		
0 to 100 PSI	GG15100L8	GG15100C8			GG20100L4	GG20100C4	GG20100L8	GG20100C8
0 to 160 PSI	GG15160L8	GG15160C8			GG20160L4	GG20160C4	GG20160L8	GG20160C8
0 to 200 PSI		GG15200C8				GG20200C4		GG20200C8

X-Mas Tree Gauge

- Accuracy ±1%
- Polished Stainless Steel Case
- Ranges to 10,000 PSIG
- Adjustable Micrometer Pointer

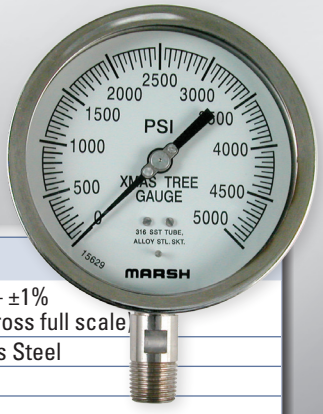

Marsh Instruments has been on top of X-mas Trees and well-heads much longer than any other name. Marsh offers the same high-performance gauge for replacement. Other gauge manufacturers can state Xmas Tree Gauge on their products but only Marsh Instruments can offer you all the special features, and dependability, that you expect! Features include a polished stainless steel case with stainless steel tube, tip, and socket, and an easy to adjust micrometer pointer.

Marsh Instruments X-mas Tree gauges are designed for the oil patch, well heads and offshore oil platforms.

Specifications

Accuracy	ASME Grade 1A – ±1% (±1% of range across full scale)
Case Material	Polished Stainless Steel
Tube & Socket	Stainless Steel
Movement	Stainless Steel
Dial Standard	Single Scale PSIG
Dial Color	Black markings on white
Pointer	Aluminum, adjustable micrometer, black painted
Window & Ring	Acrylic window with bayonet ring
Case Size	4-1/2"
Mounting/Case Style	LM
Connection	1/2 NPT
0 to 1,000 PSI	W0574
0 to 1,500 PSI	W0578
0 to 2,000 PSI	W0582
0 to 3,000 PSI	W0586
0 to 5,000 PSI	W0590
0 to 10,000 PSI	W0594

63mm Severe Service Gauge

Marsh Instruments Liquid-Filled Gauges are designed to perform in rugged applications and harsh environmental conditions where pulsation and vibration are a problem. Liquid Filled Gauges offer a significant cushioning and dampening effect, reducing pointer flutter and internal gauge damage; also lubricating the internals, and reducing corrosion. All stainless steel Liquid Filled Gauges feature a ventable top fill plug for pressure relief and ease of venting after installation. The high pressure ranges offer a Helical Bourdon Tube for longer gauge life and increased durability. The hermetically sealed construction reduces the chance of leaks, and makes field filling an easy option.

Typical applications include refineries, chemical plants, offshore platforms, oil rigs, marine applications and OEM processes.

Specifications

Accuracy	ASME Grade B – ±3/2/3% (±2% of range across middle half of scale)					
Case Material	304 Stainless Steel					
Movement	Brass					
Dial Standard	Dual scale PSIG and kPa					
Dial Color	Black markings on white					
Pointer	Aluminum, Black painted					
Window	Polycarbonate					
Fill Medium	Glycerine					
Restrictor	Standard for all ranges					
Vent Plug	Removable tip for venting					
Case Size	63mm					
Internal-Tube & Socket	Copper Alloy			Stainless Steel		
Mounting/Case Style	LM	UC	CB	LM	UC	CB
Connection	1/4 NPT	1/4 NPT	1/4 NPT	1/4 NPT	1/4 NPT	1/4 NPT
0 to 30" Hg VAC	J7605P	J7205P	J6405P	J7805P	J7405P	J6605P
30" Hg VAC to 15 PSI						
30" Hg VAC to 30 PSI	J7612P					
30" Hg VAC to 60 PSI	J7614P					
30" Hg VAC to 100 PSI						
30" Hg VAC to 150 PSI	J7618P	J7218P	J6418P	J7818P	J7418P	J6618P
30" Hg VAC to 200 PSI	J7620P	J7220P	J6420P	J7820P	J7420P	J6620P
30" Hg VAC to 300 PSI	J7624P	J7224P	J6424P	J7824P	J7424P	J6624P
30" Hg VAC to 400 PSI	J7626P	J7226P	J6426P	J7826P	J7426P	J6626P
0 to 15 PSI	J7640P	J7240P	J6440P	J7840P	J7440P	J6640P
0 to 30 PSI	J7642P	J7242P	J6442P	J7842P	J7442P	J6642P
0 to 60 PSI	J7646P	J7246P	J6446P	J7846P	J7446P	J6646P
0 to 100 PSI	J7648P	J7248P	J6448P	J7848P	J7448P	J6648P
0 to 160 PSI	J7652P	J7252P	J6452P	J7852P	J7452P	J6652P
0 to 200 PSI	J7654P	J7254P	J6454P	J7854P	J7454P	J6654P
0 to 300 PSI	J7658P	J7258P	J6458P	J7858P	J7458P	J6658P
0 to 400 PSI	J7660P	J7260P	J6460P	J7860P	J7460P	J6660P
0 to 600 PSI	J7664P	J7264P	J6464P	J7864P	J7464P	J6664P
0 to 1,000 PSI	J7672P	J7272P	J6472P	J7872P	J7472P	J6672P
0 to 1,500 PSI	J7674P	J7274P	J6474P	J7874P	J7474P	J6674P
0 to 2,000 PSI	J7676P	J7276P	J6476P	J7876P	J7476P	J6676P
0 to 3,000 PSI	J7678P	J7278P	J6478P	J7878P	J7478P	J6678P
0 to 5,000 PSI	J7682P	J7282P	J6482P	J7882P	J7482P	J6682P
0 to 6,000 PSI	J7684P	J7284P	J6484P	J7884P	J7484P	J6684P

NOTE: Items are available on special order. However, minimums and lead times apply. Consult factory.

Option	Type	Suffix	Available On Models
Fill Medium	Dry (no fill)	Delete suffix P	All models
	Silicone (SL)	I	All models
Front Flange	Adapter ring (3 hole)	R1	Center Back & U-Clamp only (Factory Installed)
	Adapter ring (no holes)	R2	U-Clamp only (Factory Installed)
Bayonet Case & Ring w/Safety Glass		J	Center Back or Lower Mount (Consult Factory)
Catalog Dials	PSIG only	E	See Marsh Price List for minimum
	Bar only	L1	
	kg/cm^2 only	L2	
	kPa only	L3	
	MPa only	L4	
	PSI & BAR	W1	
	PSI & kg/cm^2	W2	
	PSI & MPa	W4	
Custom Dials	Logo or Custom Face	M	Consult factory for colors and minimums
Restrictor	Special Restrictor	H	All models - See Marsh Price List for minimum
	Restrictor Removed	H1	
Increased Accuracy	Grade A (2/1/2%)	B	All models - See Marsh Price List for minimum
Special Connections			Consult Factory

100mm Severe Service Gauge

- Brass or Stainless Steel Internal
- Hermetically Sealed – Field Fillable

Marsh Instruments Liquid Filled Gauges are designed to perform in rugged applications and harsh environmental conditions - especially where pulsation and vibration are a problem. Liquid Filled Gauges offer a significant cushioning and dampening effect, reducing pointer flutter and internal gauge damage; also lubricating the internals, and reducing corrosion. All stainless steel Liquid Filled Gauges feature a vent top fill plug for pressure relief and ease of venting after installation. The hermetically sealed construction reduces the chance of leaks, and makes field filling an easy option.

Typical applications include refineries, chemical plants, offshore platforms, oil rigs, marine applications and OEM processes.

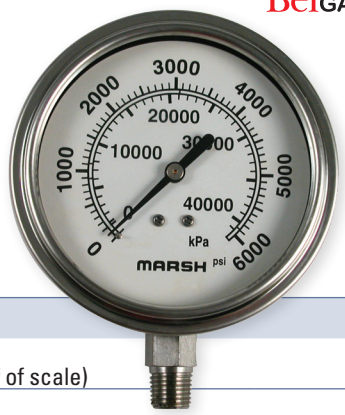

Specifications

Accuracy	ASME Grade A – ±2/1/2% (±1% of range across middle half of scale)					
Case Material	304 Stainless Steel					
Movement	Brass sector and pinion					
Dial Standard	Dual scale PSI & kPa					
Dial Color	Black markings on white					
Pointer	Aluminum. black painted					
Window	Polycarbonate					
Fill Medium	Glycerine					
Restrictor	Standard for all ranges					
Vent Plug	Removable tip for venting					
Case Size	100mm					
Internal Tube & Socket	Copper Alloy			Stainless Steel		
Mounting/Case Style	LM	CB	UC	LM	CB	UC
Connection	¼ NPT	¼ NPT	¼ NPT	¼ NPT	¼ NPT	¼ NPT
0 to 30" Hg VAC	X32965P			X32967P		
30" Hg VAC to 30 PSI	X32501P					
30" Hg VAC to 60 PSI	X32502P					
30" Hg VAC to 100 PSI						
30" Hg VAC to 150 PSI	X32887P	X32901P	X32894P	X32929P	X32941P	X32935P
30" Hg VAC to 200 PSI	X32888P	X32902P	X32895P	X32930P	X32942P	X32936P
30" Hg VAC to 300 PSI	X32889P	X32903P	X32896P	X32931P	X32943P	X32937P
0 to 15 PSI	X32504P	X32546P	X32525P	X32630P	X32678P	X32654P
0 to 30 PSI	X32505P	X32547P	X32526P	X32631P	X32679P	X32655P
0 to 60 PSI	X32506P	X32548P	X32527P	X32632P	X32680P	X32656P
0 to 100 PSI	X32507P	X32549P	X32528P	X32633P	X32681P	X32657P
0 to 160 PSI	X32508P	X32550P	X32529P	X32634P	X32682P	X32658P
0 to 200 PSI	X32509P	X32551P	X32530P	X32635P	X32683P	X32659P
0 to 300 PSI	X32510P	X32552P	X32531P	X32636P	X32684P	X32660P
0 to 400 PSI	X32511P	X32553P	X32532P	X32637P	X32685P	X32661P
0 to 600 PSI	X32512P	X32554P	X32533P	X32638P	X32686P	X32662P
0 to 1,000 PSI	X32513P	X32555P	X32534P	X32639P	X32687P	X32663P
0 to 1,500 PSI	X32514P	X32556P	X32535P			
0 to 2,000 PSI	X32515P	X32557P	X32536P	X32641P	X32689P	X32665P
0 to 3,000 PSI	X32516P	X32558P	X32537P	X32642P	X32690P	X32666P
0 to 5,000 PSI	X32518P	X32560P	X32539P	X32644P	X32692P	X32668P
0 to 6,000 PSI	X32519P	X32561P	X32540P	X32645P	X32693P	X32669P
0 to 10,000 PSI				X32647P	X32695P	X32671P

NOTE: Items are available on special order. However, minimums and lead times apply. Consult factory.

Option	Type	Suffix	Available On Models
Fill Medium	Dry (no fill)	Delete suffix P	All models
	Silicone option (SL)	I	All models
Front Flange	Adapter ring (3 hole)	R	Center Back & U-Clamp only (factory Installed)
Catalog Dials	PSIG only	E	See Marsh Price List for minimum
	BAR only	L1	
	kg/cm² only	L2	
	kPa only	L3	
	MPa	L4	
	PSI & BAR	W1	
	PSI & kg/cm²	W2	
	PSIG & MPa	W4	
Custom Dials	Logo or Custom face	M	Consult factory for colors and minimums
Restrictor	Special restrictor	H	All models - See Marsh Price List for minimum
	Restrictor removed	H1	
Increased Accuracy	Grade 1A ±1% full scale	B	All models - See Marsh Price List for minimum
Special Connections			Consult Factory

100mm Elite Stainless Steel Gauge

- All Stainless Steel
- Field Fillable
- Ranges to 10,000 PSIG
- Liquid Filled or Dry
- Solid Front Design
  — Safecase

Marsh Instruments All Stainless Steel Gauges are built for extended life, and designed for harsh and corrosive environments. These stainless steel gauges feature top fill plugs and are field fillable. Marsh Liquid Filled Gauges offer significant cushioning and dampening which reduces pointer flutter and internal gauge damage.

Typical applications include refineries, chemical plants, offshore platforms, oil rigs, marine applications, general industrial application and OEM processes.

Specifications

Accuracy	ASME Grade 1A – ±1.0% of range across full scale
Case Material	304 Stainless Steel
Case Style	Solid front & blow-out back (Safecase construction)
Tube & Socket	316 Stainless Steel
Movement	Stainless Steel
Scale Standard	Dual scale PSI and kPa
Dial Color	Black markings on white
Pointer	Aluminum, black painted
Window	Safety Glass
Fill Medium	See Options
Vent	Internal compensating diaphragm
Case Size	100mm (4")
Mounting / Case Style	LM
Connection	1/2 NPT
0 to 30" Hg VAC	W9605
0 to 30 PSI	W9642
0 to 60 PSI	W9646
0 to 100 PSI	W9648
0 to 200 PSI	W9654
0 to 300 PSI	W9658
0 to 600 PSI	W9664
0 to 1,000 PSI	W9672
0 to 1,500 PSI	W9674
0 to 2,000 PSI	W9676
0 to 3,000 PSI	W9678
0 to 5,000 PSI	W9682

Option	Type	Suffix	Available On Models
Fill Medium	Dry (no fill)	Standard	All Ranges
	Glycerine (GL)	Add suffix P	
	Silicone (SL)	Add suffix PI	

63mm & 100mm Brass Gauge

- Forged Brass case
  (one piece construction)
- Ranges to 10,000 PSIG
- Heavy Duty Performance

Marsh forged brass gauges are designed for top performance in rugged applications and harsh environments, where corrosive gas or media is not an issue. Applications include Oil Patch, Hydraulics, Natural Gas, OEM and General Industrial applications where superior quality is required. Liquid Filling protects against pulsation and vibration offering a cushioning and dampening effect. The hermetically sealed one piece design reduces the chance of leaks and allows field filling as an easy option.

Specifications

Size	63mm	100mm
Accuracy	±1.6% F.S.	±1% F.S.
Case Material	Forged Brass	Forged Brass
Internals	Copper Alloy	Copper Alloy
Mounting / Case Style	LM	LM
Connection	1⁄4 NPT	1⁄2 NPT
Scale Standard	PSI	PSI
0 to 30" Hg VAC	W9005PE	W9405PE
30" Hg VAC to 30 PSI	W9012PE	W9412PE
30" Hg VAC to 60 PSI	W9014PE	W9414PE
30" Hg VAC to 100 PSI	W9016PE	W9416PE
30" Hg VAC to 200 PSI	W9020PE	W9420PE
0 to 15 PSI	W9040PE	W9440PE
0 to 30 PSI	W9042PE	W9442PE
0 to 60 PSI	W9046PE	W9446PE
0 to 100 PSI	W9048PE	W9448PE
0 to 160 PSI	W9052PE	W9452PE
0 to 200 PSI	W9054PE	W9454PE
0 to 300 PSI	W9058PE	W9458PE
0 to 400 PSI	W9060PE	W9460PE
0 to 600 PSI	W9064PE	W9464PE
0 to 1,000 PSI	W9072PE	W9472PE
0 to 1,500 PSI	W9074PE	W9474PE
0 to 2,000 PSI	W9076PE	W9476PE
0 to 3,000 PSI	W9078PE	W9478PE
0 to 5,000 PSI	W9082PE	W9482PE
0 to 10,000 PSI	W9090PE	W9490PE

Option	Type	Suffix	Available On Models

Quality Series 100mm Gauge

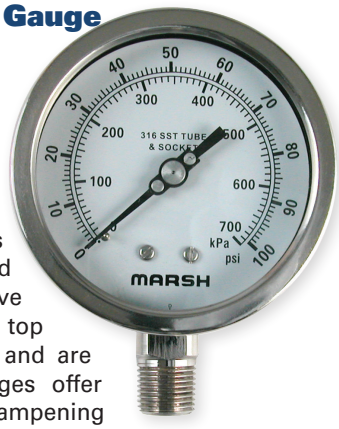

- Liquid Filled or Dry
- Adjustable Micrometer Pointer
- Ranges to 10,000 PSI
- Safety Glass Window

Marsh Stainless Steel gauges are built for extended life and designed for harsh and corrosive environments. They feature a top fill plug polished bayonet ring and are field fillable. Liquid filled gauges offer significant cushioning and dampening plus extend the life of a gauge.

Applications include Oil Patch, Refineries, Oil Rigs, Panel builders, Offshore Platforms, Marine and General Industrial.

Specifications

Accuracy	ASME Grade 1A – ±1.0% of range across full scale	
Case Material	304 Stainless Steel	
Tube & Socket	316 Stainless Steel	
Movement	Stainless Steel	
Scale Standard	PSI / kPa	
Dial Color	Black markings on white	
Pointer	Aluminum, Adjustable Micrometer, black painted	
Window	Safety Glass	
Fill Medium	See options	
Vent	Rubber plug with snip-off feature	
Case Size	100mm (4")	**NACE** 100mm (4")
Mounting / Case Style	LM	LM
Connection	1/2 NPT	1/2 NPT
0 to 30" Hg Vacuum	H20905	
0 to 15 PSI	H20940	HN20940
0 to 30 PSI	H20942	HN20942
0 to 60 PSI	H20946	HN20946
0 to 100 PSI	H20948	HN20948
0 to 160 PSI	H20952	HN20952
0 to 200 PSI	H20954	HN20954
0 to 300 PSI	H20958	HN20958
0 to 400 PSI	H20960	HN20960
0 to 600 PSI	H20964	HN20964
0 to 1,000 PSI	H20972	HN20972
0 to 1,500 PSI	H20974	HN20974
0 to 2,000 PSI	H20976	HN20976
0 to 3,000 PSI	H20978	HN20978
0 to 5,000 PSI	H20982	HN20982

Option	Type	Suffix	Available On Models

Quality Series 100mm Copper Alloy Internals

- Liquid Filled or Dry
- Removable polished bayonet ring
- Ranges to 10,000 PSI
- Safety Glass Window

Stainless steel case with copper alloy internals. Ideal for heavy duty service in industrial and commercial environments. Features robust design with removable polished bayonet ring and adjustable pointer. Field fillable.

Applications include Industrial Machinery, Oilfield Equipment and Controls, Wellheads, Pipeline and General Industrial.

Specifications

Accuracy	ASME Grade 1A – ±1.0% of range across full scale
Case Material	304 Stainless Steel
Tube & Socket	Copper Alloy
Movement	Stainless Steel
Scale Standard	Single scale PSI
Dial Color	Black markings on white
Pointer	Aluminum, Adjustable Micrometer, black painted
Window	Safety Glass
Fill Medium	See options
Vent	Rubber plug with snip-off feature
Case Size	100mm (4")
Mounting / Case Style	LM
Connection	1/2 NPT
0 to 30" Hg Vacuum	H20505
0 to 15 PSI	H20540
0 to 30 PSI	H20542
0 to 60 PSI	H20546
0 to 100 PSI	H20548
0 to 160 PSI	H20552
0 to 200 PSI	H20554
0 to 300 PSI	H20558
0 to 400 PSI	H20560
0 to 600 PSI	H20564
0 to 1,000 PSI	H20572
0 to 1,500 PSI	H20574
0 to 2,000 PSI	H20576
0 to 3,000 PSI	H20578
0 to 5,000 PSI	H20582

Option	Type	Suffix	Available On Models

Marsh Instruments

STD Pocket Thermometer

- 1" Dial
- 304SS Hermetically Sealed Case
- 5" long stem
- Protective Case with SS Clip

Marsh Instruments STD pocket thermometers have a 1" dial, 304SS hermetically sealed case, 304SS 0.4mm diameter 5" long stem, and plastic lens. The accuracy is ±1.5% of scale range. Each unit comes with a protective case with SS clip, that allows it to be safely carried in your pocket and also can be used to hold the thermometer in the medium to be tested.

Typical applications include the food industries, HVAC/R, and any applications requiring fast and accurate temperature.

Digital Pocket Thermometer

- 3.5 Digital LCD display
- ABS Plastic Case
- 5" long stem
- Protective Case with SS Clip

Marsh Instruments Digital Pocket Thermometers have a 3.5 digit LCD display, ABS case and a 304SS 5" long stem. The accuracy is ±2 °F with an update time of 10 seconds. Each unit has an on-off switch for longer battery life and comes with the protective carrying case.

Typical applications include the food industries, HVAC/R, and any applications requiring fast and accurate tem perature.

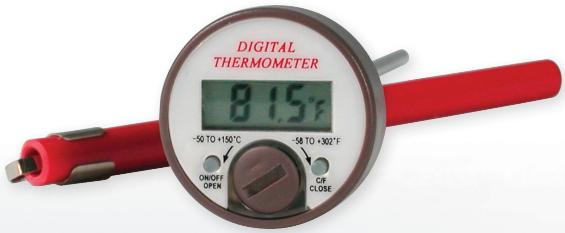

Specifications

Accuracy	±1.5% of scale range
Scale	-40/160°F, 0/220°F, 50/550°F
Case	304 Stainless Steel
L020E	1" dial, 5" stem, -40/160°F
L041E	1" dial, 5" stem, 0/220°F
L080E	1" dial, 5" stem, 50/550°F

Specifications

Accuracy	±2°F
Scale	-58 to 302°F / -50 to 150°C
Case	ABS Plastic

Gas Pressure Test Set

- Includes 2 1/2" dial size guage
- Provided in grey polyethylene case with 3 ft. of rubber tubing

TYPE			84K
Range			Part No.
0 to 15" H_2O		0 to 4.0 kPa	G28145
0 to 8.75 oz/in^2	0 to 15" H_2O	0 to 4.0 kPa	G33421
0 to 20 oz/in^2	0 to 30" H_2O	0 to 8.6 kPa	G24507
0 to 58 oz/in^2	0 to 100" H_2O	0 to 25 kPa	G27038

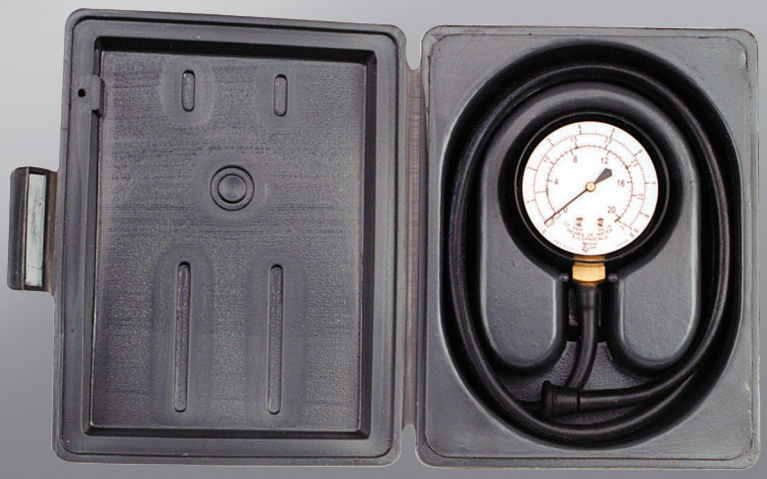

Bimetal Thermometers

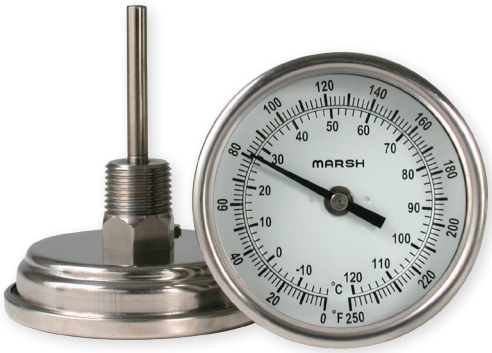

- External Reset Feature for Field Recalibration (3" & 5")
- 9 Dual Scale Ranges to 1,000°F (525°C)
- Hermetically Sealed Case Design
- 2", 3" and 5" Dials
- Stem Lengths to 24"
- 1% Full Scale Accuracy

Marsh Instruments Bimetal Thermometers combine the benefits of economy and reliability for local mounted temperature indication in the dual scale ranges from -50° to 1,000°F (-40° to 525°C). Additional advantages offered by the Series "L" Bimetal Thermometers include an easy-to-read dual scale, fast speed of response, and accurate temperature indication. The hermetically sealed and ruggedly built case is resistant to shock, vibration, dust and moisture. Corrosion resistance to most chemicals is provided by the all welded type 304 Stainless Steel construction. The extremely responsive bimetal sensing element provides an accuracy to within ±1% of scale. An external adjustment screw on the back of the 3" and 5" case provides convenient reset and field recalibration. Built-in over range protection is a standard feature.

Typical applications include process, offshore, power, chemical industries, HVAC and OEM applications.

Specifications

Accuracy	±1% of span throughout entire range for 2" immersion in liquids, 4" in gases					
Case Material	304 Stainless Steel					
Stem	304 Stainless Steel, 1/4" diameter					
Dials	Dual scale in degrees Fahrenheit and Celsius					
Window	Glass, hermetically sealed					
Size	2"					
Connection (NPT)	1/4 NPT					
Mounting	CB	CB	CB	CB	CB	
Stem Length	2-1/2"	4"	6"	9"	12"	
-50° to 120°F/-40° to 50°C	L11101	L11201	L11301	L11401	L11501	
-40° to 160°F/-40° to 70°C	L11102	L11202	L11302	L11402	L11502	
0° to 200°F/-20° to 90°C	L11104	L11204	L11304	L11404	L11504	
0° to 250°F/-20° to 120°C	L11105	L11205	L11305	L11405	L11505	
50° to 300°F/10° to 150°C	L11106	L11206	L11306	L11406	L11506	
50° to 400°F/10° to 200°C	L11107	L11207	L11307	L11407	L11507	
50° to 550°F/10° to 300°C	L11108	L11208	L11308	L11408	L11508	
150° to 750°F/70° to 400°C	L11110	L11210	L11310	L11410	L11510	
200° to 1000°F/100° to 525°C	L11111	L11211	L11311	L11411	L11511	
Size	3"					
Connection (NPT)	1/2 NPT					
Mounting	CB	CB	CB	CB	CB	CB
Stem Length	2-1/2"	4"	6"	9"	12"	15"
-50° to 120°F/-40° to 50°C	L31101	L31201	L31301	L31401	L31501	L31601
-40° to 160°F/-40° to 70°C	L31102	L31202	L31302	L31402	L31502	L31602
0° to 200°F/-20° to 90°C	L31104	L31204	L31304	L31404	L31504	L31604
0° to 250°F/-20° to 120°C	L31105	L31205	L31305	L31405	L31505	L31605
50° to 300°F/10° to 150°C	L31106	L31206	L31306	L31406	L31506	L31606
50° to 400°F/10° to 200°C	L31107	L31207	L31307	L31407	L31507	L31607
50° to 550°F/10° to 300°C	L31108	L31208	L31308	L31408	L31508	L31608
150° to 750°F/70° to 400°C	L31110	L31210	L31310	L31410	L31510	L31610
200° to 1000°F/100° to 525°C	L31111	L31211	L31311	L31411	L31511	L31611

Size	3" Adjustable Angle					
Connection (NPT)	1/2 NPT					
Mounting	AJ	AJ	AJ	AJ	AJ	AJ
Stem Length	2-1/2"	4"	6"	9"	12"	15"
–50° to 120°F/-40° to 50°C	L33101	L33201	L33301	L33401	L33501	L33601
–40° to 160°F/-40° to 70°C	L33102	L33202	L33302	L33402	L33502	L33602
0° to 200°F/-20° to 90°C	L33104	L33204	L33304	L33404	L33504	L33604
0° to 250°F/-20° to 120°C	L33105	L33205	L33305	L33405	L33505	L33605
50° to 300°F/ 10° to 150°C	L33106	L33206	L33306	L33406	L33506	L33606
50° to 400°F/ 10° to 200°C	L33107	L33207	L33307	L33407	L33507	L33607
50° to 550°F/ 10° to 300°C	L33108	L33208	L33308	L33408	L33508	L33608
150° to 750°F/ 70° to 400°C	L33110	L33210	L33310	L33410	L33510	L33610
200° to 1000°F/ 100° to 525°C	L33111	L33211	L33311	L33411	L33511	L33611

Size	5"							
Connection (NPT)	1/2 NPT							
Mounting	CB	CB	CB	CB	CB	CB	CB	CB
Stem Length	2-1/2"	4"	6"	9"	12"	15"	18"	24"
–50° to 120°F/-40° to 50°C	L51101	L51201	L51301	L51401	L51501	L51601	L51701	L51801
–40° to 160°F/-40° to 70°C	L51102	L51202	L51302	L51402	L51502	L51602	L51702	L51802
0° to 200°F/-20° to 90°C	L51104	L51204	L51304	L51404	L51504	L51604	L51704	L51804
0° to 250°F/-20° to 120°C	L51105	L51205	L51305	L51405	L51505	L51605	L51705	L51805
50° to 300°F/ 10° to 150°C	L51106	L51206	L51306	L51406	L51506	L51606	L51706	L51806
50° to 400°F/ 10° to 200°C	L51107	L51207	L51307	L51407	L51507	L51607	L51707	L51807
50° to 550°F/ 10° to 300°C	L51108	L51208	L51308	L51408	L51508	L51608	L51708	L51808
150° to 750°F/ 70° to 400°C	L51110	L51210	L51310	L51410	L51510	L51610	L51710	L51810
200° to 1000°F/ 100° to 525°C	L51111	L51211	L51311	L51411	L51511	L51611	L51711	L51811

Size	5" Adjustable Angle							
Connection (NPT)	1/2 NPT							
Mounting	AJ	AJ	AJ	AJ	AJ	AJ	AJ	AJ
Stem Length	2-1/2"	4"	6"	9"	12"	15"	18"	24"
–50° to 120°F/-40° to 50°C	L53101	L53201	L53301	L53401	L53501	L53601	L53701	L53801
–40° to 160°F/-40° to 70°C	L53102	L53202	L53302	L53402	L53502	L53602	L53702	L53802
0° to 200°F/-20° to 90°C	L53104	L53204	L53304	L53404	L53504	L53604	L53704	L53804
0° to 250°F/-20° to 120°C	L53105	L53205	L53305	L53405	L53505	L53605	L53705	L53805
50° to 300°F/ 10° to 150°C	L53106	L53206	L53306	L53406	L53506	L53606	L53706	L53806
50° to 400°F/ 10° to 200°C	L53107	L53207	L53307	L53407	L53507	L53607	L53707	L53807
50° to 550°F/ 10° to 300°C	L53108	L53208	L53308	L53408	L53508	L53608	L53708	L53808
150° to 750°F/ 70° to 400°C	L53110	L53210	L53310	L53410	L53510	L53610	L53710	L53810
200° to 1000°F/ 100° to 525°C	L53111	L53211	L53311	L53411	L53511	L53611	L53711	L53811

Thermowells

- Brass, 304 Stainless Steel or 316 Stainless Steel
- Tapered or Straight Shank
- 0.260 and 0.385 Standard Bore Sizes
- Threaded for easy connection

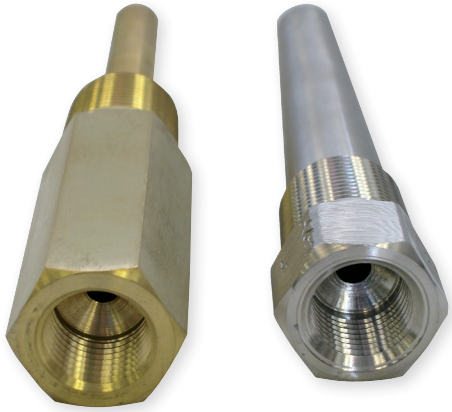

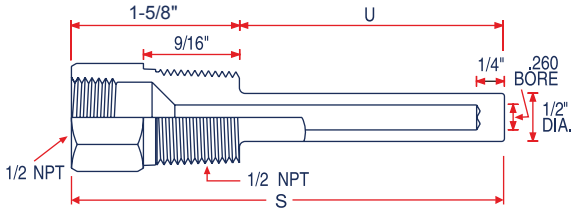

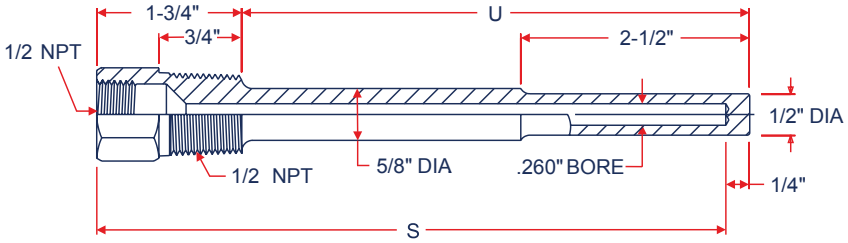

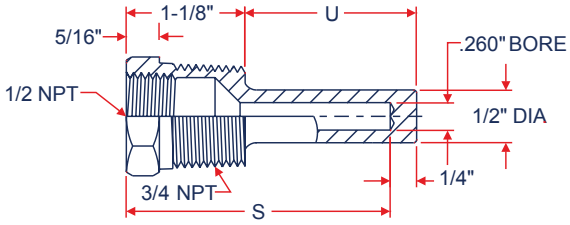

Part Number	"S" Stem	"U" Insertion	Well Material
M3957K67	2-1/2	1-1/8	Brass
M3957K68	2-1/2	1-1/8	304SS
M3957K69	2-1/2	1-1/8	316SS
M3957K64	4	2-1/2	Brass
M3957K65	4	2-1/2	304SS
M3957K66	4	2-1/2	316SS
M3957K37	6	4-1/2	Brass
M3957K38	6	4-1/2	304SS
M3957K51	6	4-1/2	316SS
M3957K39	9	7-1/2	Brass
M3957K41	9	7-1/2	304SS
M3957K52	9	7-1/2	316SS
M3957K42	12	10-1/2	Brass
M3957K43	12	10-1/2	304SS
M3957K53	12	10-1/2	316SS
M3957K71	18	16-1/2	Brass
M3957K72	18	16-1/2	304SS
M3957K73	18	16-1/2	316SS
M3957K74	24	22-1/2	Brass
M3957K75	24	22-1/2	304SS
M3957K76	24	22-1/2	316SS
M3957K77	2-1/2	1-5/8	Brass
M3957K78	2-1/2	1-5/8	304SS
M3957K79	2-1/2	1-5/8	316SS

Thermowells

Part Number	"S" Stem	"U" Insertion	Well Material
M3957K11	4	2-1/2	Brass
M3957K21	4	2-1/2	304SS
M3957K54	4	2-1/2	316SS
M3957K12	6	4-1/2	Brass
M3957K22	6	4-1/2	304SS
M3957K55	6	4-1/2	316SS
M3957K13	9	7-1/2	Brass
M3957K23	9	7-1/2	304SS
M3957K56	9	7-1/2	316SS
M3957K44	12	10-1/2	Brass
M3957K45	12	10-1/2	304SS
M3957K57	12	10-1/2	316SS
M3957K84	18	16-1/2	Brass
M3957K85	18	16-1/2	304SS
M3957K86	18	16-1/2	316SS
M3957K87	24	22-1/2	Brass
M3957K88	24	22-1/2	304SS
M3957K89	24	22-1/2	316SS

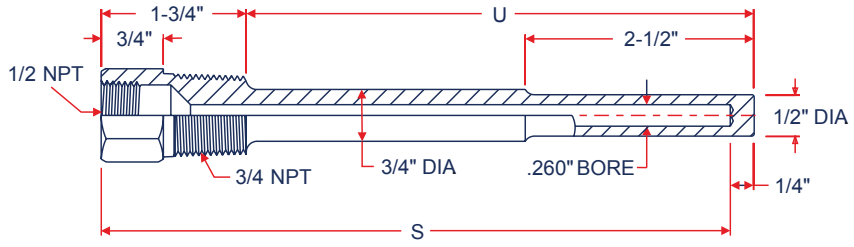

Part Number	"S" Stem	"U" Insertion	Well Material
M3957K46	4	2-1/2	Brass
M3957K47	4	2-1/2	304SS
M3957K58	4	2-1/2	316SS
M3957K48	6	4-1/2	Brass
M3957K49	6	4-1/2	304SS
M3957K59	6	4-1/2	316SS
M3957K91	9	7-1/2	Brass
M3957K92	9	7-1/2	304SS
M3957K93	9	7-1/2	316SS
M3957K94	12	10-1/2	Brass
M3957K95	12	10-1/2	304SS
M3957K96	12	10-1/2	316SS
M3957K14	18	16-1/2	Brass
M3957K15	18	16-1/2	304SS
M3957K16	18	16-1/2	316SS
M3957K17	24	22-1/2	Brass
M3957K18	24	22-1/2	304SS
M3957K19	24	22-1/2	316SS

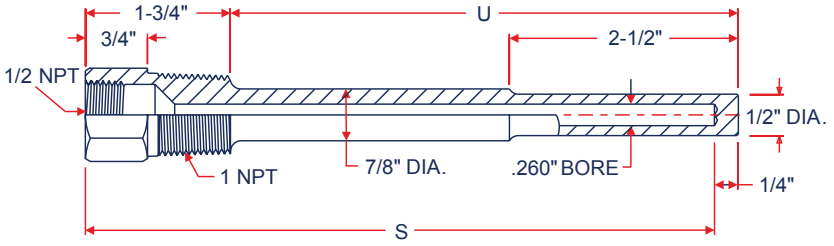

Part Number	"S" Stem	"U" Insertion	"T" Lag	Well Material
M3957K24	9	4-1/2	4	Brass
M3957K25	9	4-1/2	4	304SS
M3957K26	9	4-1/2	4	316SS
M3957K27	12	7-1/2	4	Brass
M3957K28	12	7-1/2	4	304SS
M3957K29	12	7-1/2	4	316SS
M3957K4	18	13-1/2	4	Brass
M3957K5	18	13-1/2	4	304SS
M3957K6	18	13-1/2	4	316SS
M3957K7	24	19-1/2	4	Brass
M3957K8	24	19-1/2	4	304SS
M3957K9	24	19-1/2	4	316SS

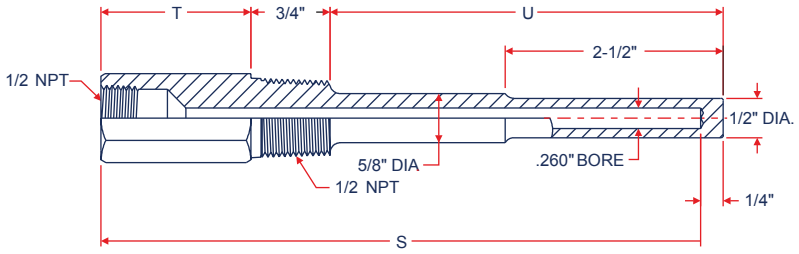

Part Number	"S" Stem	"U" Insertion	"T" Lag	Well Material
M3957K31	6	2-1/2	2-3/4	Brass
M3957K32	6	2-1/2	2-3/4	304SS
M3957K61	6	2-1/2	2-3/4	316SS
M3957K33	9	4-1/2	3-3/4	Brass
M3957K34	9	4-1/2	3-3/4	304SS
M3957K62	9	4-1/2	3-3/4	316SS
M3957K35	12	7-1/2	3-3/4	Brass
M3957K36	12	7-1/2	3-3/4	304SS
M3957K63	12	7-1/2	3-3/4	316SS
M3957K114	18	13-1/2	3-3/4	Brass
M3957K115	18	13-1/2	3-3/4	304SS
M3957K116	18	13-1/2	3-3/4	316SS
M3957K117	24	19-1/2	3-3/4	Brass
M3957K118	24	19-1/2	3-3/4	304SS
M3957K119	24	19-1/2	3-3/4	316SS

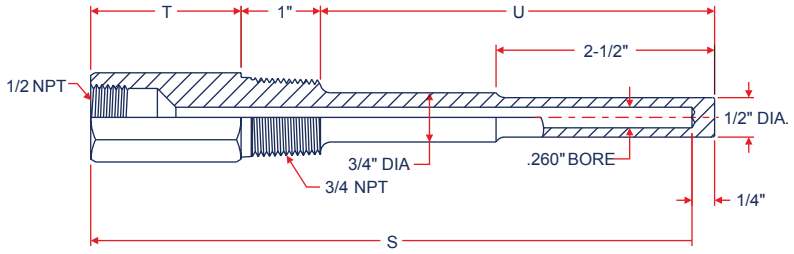

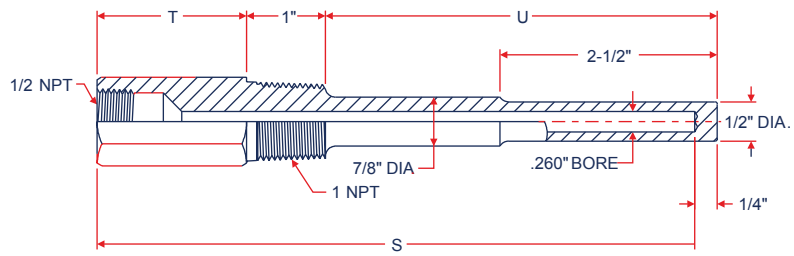

Part Number	"S" Stem	"U" Insertion	"T" Lag	Well Material
M3957K121	9	4-1/2	3-3/4	Brass
M3957K122	9	4-1/2	3-3/4	304SS
M3957K123	9	4-1/2	3-3/4	316SS
M3957K124	12	7-1/2	3-3/4	Brass
M3957K125	12	7-1/2	3-3/4	304SS
M3957K126	12	7-1/2	3-3/4	316SS
M3957K131	18	13-1/2	3-3/4	Brass
M3957K132	18	13-1/2	3-3/4	304SS
M3957K133	18	13-1/2	3-3/4	316SS
M3957K134	24	19-1/2	3-3/4	Brass
M3957K135	24	19-1/2	3-3/4	304SS
M3957K136	24	19-1/2	3-3/4	316SS

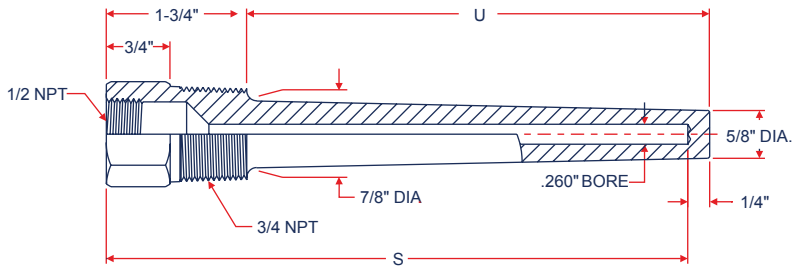

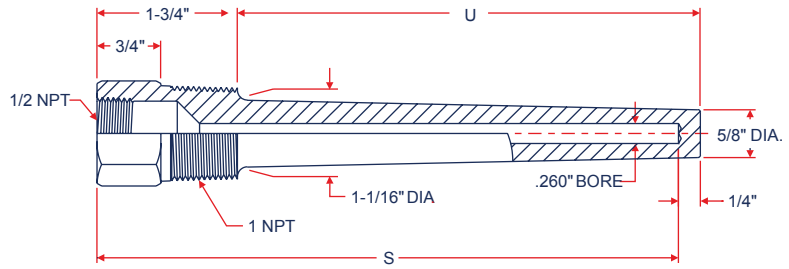

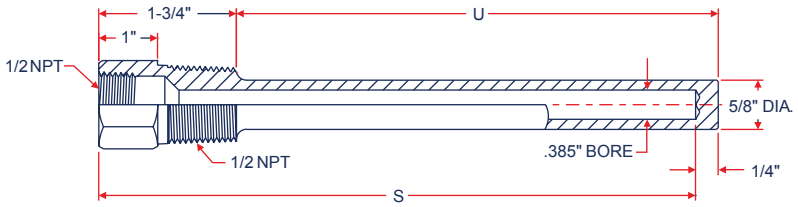

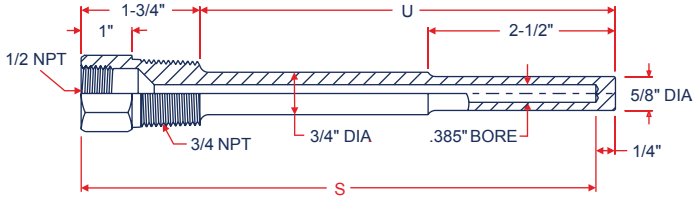

Part Number	"S" Stem	"U" Insertion	Well Material
M3957K137	4	2-1/2	Brass
M3957K138	4	2-1/2	304SS
M3957K139	4	2-1/2	316SS
M3957K141	6	4-1/2	Brass
M3957K142	6	4-1/2	304SS
M3957K143	6	4-1/2	316SS
M3957K144	9	7-1/2	Brass
M3957K145	9	7-1/2	304SS
M3957K146	9	7-1/2	316SS
M3957K147	12	10-1/2	Brass
M3957K148	12	10-1/2	304SS
M3957K149	12	10-1/2	316SS
M3957K162	4	2-1/2	Brass
M3957K163	4	2-1/2	304SS
M3957K164	4	2-1/2	316SS
M3957K165	6	4-1/2	Brass
M3957K166	6	4-1/2	304SS
M3957K167	6	4-1/2	316SS
M3957K168	9	7-1/2	Brass
M3957K169	9	7-1/2	304SS
M3957K171	9	7-1/2	316SS
M3957K172	12	10-1/2	Brass
M3957K173	12	10-1/2	304SS
M3957K174	12	10-1/2	316SS
M3957K221	4	2-1/2	Brass
M3957K222	4	2-1/2	304SS
M3957K223	4	2-1/2	316SS
M3957K231	6	4-1/2	Brass
M3957K232	6	4-1/2	304SS
M3957K233	6	4-1/2	316SS
M3957K241	9	7-1/2	Brass
M3957K242	9	7-1/2	304SS
M3957K243	9	7-1/2	316SS
M3957K261	4	2-1/2	Brass
M3957K262	4	2-1/2	304SS
M3957K263	4	2-1/2	316SS
M3957K271	6	4-1/2	Brass
M3957K272	6	4-1/2	304SS
M3957K273	6	4-1/2	316SS
M3957K281	9	7-1/2	Brass
M3957K282	9	7-1/2	304SS
M3957K283	9	7-1/2	316SS

Needle Valves

BelGAS Standard Needle Valves offer four choices in 316 stainless steel as well as one piece forged carbon plated steel; soft seat and hard seat, angle and globe styles. The Mini Valve offers 2 choices in 316 stainless steel and bar stock plated carbon steel; soft seat and hard seat globe style, T-bar and thumb wheel operation.

These valves are suited for instrumentation, process plant use, oil and gas production and general applications where isolation and positive shutoff is a requirement.

For applications requiring a positive shutoff, the soft seat style with Delrin® seat insert offers a bubble tight seat for leak free operation. For corrosives and caustic applications, the hard seat style offers a metal to metal sealing force to clear obstructions and corrosion.

All valves are deigned to the following standards;
ANSI B31.1.0 – Power Piping
ANSI B11.20 – Fuel Gas Piping
ANSI B31.3 – Chemical Plant Petroleum Refinery Piping
ASME Section VII-DIV1 – Boiler & Pressure Vessel Code

Thread & Dimensional codes include;
ANSI B2.1 – Pipe Threads
ANSI B1.1 – Straight Threads
ASME B16.10

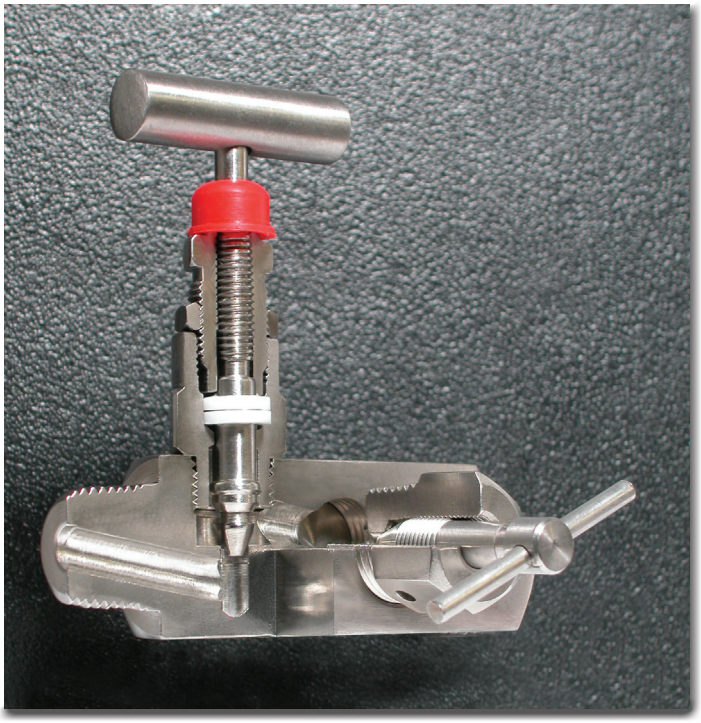

Needle Valves Part Matrix

			–				–			
										Valve Type
V										Standard
M										Mini
B										Block/Bleed
										Seat Design
	S									Soft Seat
	H									Hard Seat
										Body Material
		C								Carbon Steel
		S								316 SS
										Inlet Connection
				F						Female
				M						Male
										Outlet Connection
					F					Female
					M					Male
										Body Pattern
						G				Globe Pattern
						A				Angle Pattern
										Connection Size
								18		1/8 NPT
								14		1/4 NPT
								38		3/8 NPT
								12		1/2 NPT
								34		3/4 NPT
								01		1 NPT
										Options
									H	Graphite Packing - High Temp
									N	NACE
									P	Panel Mount
									W	Hand Wheel (Mini only)
									V	Viton O-ring, Soft Seat Only

Flow Coefficient (C_V)

Method of Calculating Flow: The flow coefficient "C_v" of a valve is the flow rate of water (gallons/minute) through a fully opened valve, with a pressure drop of 1 psi across the valve.

To find the flow of liquid through a valve from the flow coef-

$$Q_L = C\sqrt{\frac{\Delta P}{G}}$$

Q_L = flow rate of liquid (gal/min.)
ΔP = differential pressure across the valve (psi)
G = specific gravity of liquid (for water, G = 1)

To find the flow of gas through a valve, use the following formula:

$$Qg = 61 C_v \sqrt{\frac{P_2 \Delta P}{g}} \quad \left\{ \text{For noncritical flow } \frac{\Delta P}{P_2} \text{ less than 1.0} \right\}$$

Qg = flow rate of gas (CFH at STP)
P_2 = outlet pressure (psi)
g = specific gravity of gas; g air = 1.0000
ΔP = differential pressure across the valve (psi)

IMPORTANT: Flow coefficients are dependent on both the size of the valve and the valve pattern itself. Marsh "C_v" factors give flow information for all sizes and patterns so that the designer is able to provide sufficient flow within the sys-

BelGAS Metal-to-Metal Seat Needle Valves

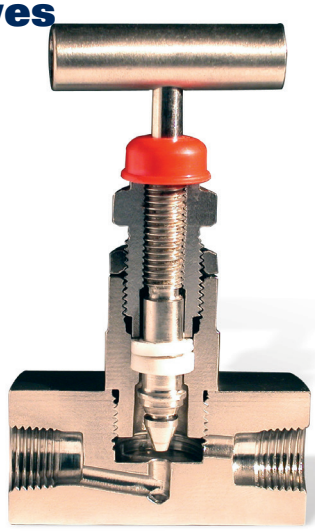

These 316 stainless steel valves are ideally suited for applications when caustic and corrosive material are being used. Pressure ratings to 10,000 psi (70,000 kPa).

- "T" bar handle
- Teflon* packing
- Roll-formed stem threads
- Precision-machined stem
- Bonnet locking pin prevents accidental removal
- Below stem thread packing gland
- Hardened and ground self centering, non-rotating tip
- Metal-to-Metal seat
- Pressure rating, 10,000 psi (70,000 kPa)

Specifications and Description

Body and Bonnet Material	ASTM A182F 316 stainless steel or ASTM A105 forged single piece steel, plated
Stem Material	316 Stainless Steel
Pressure/ Temperature Rating	See Page 7 for Temperature / Pressure limits
Packing	Two piece molded Teflon* (PTFE).
Seat	Metal-to-Metal
Handle	"T" bar; 316 Stainless Steel or ASTM A108 Alloy Steel
Connection	National Pipe Thread, meeting specifications of ANSI B2.1
Finish	Stainless Steel is Passivated. Alloy Steel has a clear Zinc Dichromate finish.

* Teflon is a registered trademark of DuPont.
** NACE valves are manufactured of 316 SS.

Pattern	Size NPT	Part Number		C_v
		316 SST	Carbon	
FFG	1/8	VHS-FFG-18	VHC-FFG-18	0.40
	1/4	VHS-FFG-14	VHC-FFG-14	0.40
	3/8	VHS-FFG-38	VHC-FFG-38	0.90
	1/2	VHS-FFG-12	VHC-FFG-12	1.10
	3/4	VHS-FFG-34	VHC-FFG-34	2.30
	1	VHS-FFG-01	VHC-FFG-01	3.50
MFG	1/4	VHS-MFG-14	VHC-MFG-14	0.40
	1/2	VHS-MFG-12	VHC-MFG-12	1.20
	3/4 x 1/2	VHS-MFG-3412	VHC-MFG-3412	1.90
FFA	1/8	VHS-FFA-18	VHC-FFA-18	0.70
	1/4	VHS-FFA-14	VHC-FFA-14	0.80
	3/8	VHS-FFA-38	VHC-FFA-38	1.60
	1/2	VHS-FFA-12	VHC-FFA-12	2.20
	3/4	VHS-FFA-34	VHC-FFA-34	2.20
	1	VHS-FFA-01	VHC-FFA-01	2.20
MFA	1/4	VHS-MFA-14	VHC-MFA-14	0.60
	1/2	VHS-MFA-12	VHC-MFA-12	1.50

Option	Suffix
Graphite Packing - High Temp.	H
NACE**	N
Panel Mount	P

BelGAS Soft-Seat Needle Valves

For applications where bubble-tight shutoff of liquids or gases are required. Pressure rating to 6,000 psi (42,000 kPa). These valves are designed with a replaceable Delrin** soft seat.

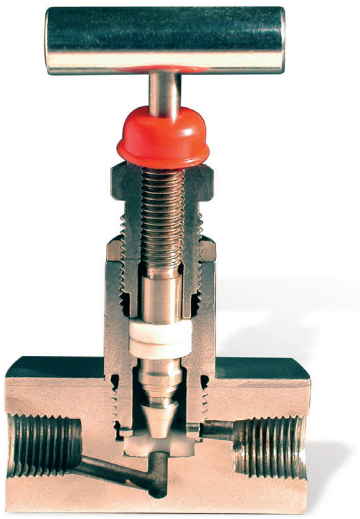

- "T" bar handle
- Teflon* packing
- Roll-formed stem threads
- Precision-machined stem
- Bonnet locking pin prevents accidental removal
- Below stem thread packing gland
- Hardened and ground self-centering, non-rotating tip
- Soft-Seat
- Bubble-tight shutoff of liquids or gases to 6,000 psi (42,000 kPa)

Specifications and Description

Body and Bonnet Material	ASTM A182F 316 Stainless Steel or ASTM A105 forged single piece steel, plated.
Stem Material	316 Stainless Steel
Pressure/ Temperature Rating	See Page 7 for Temperature / Pressure limits
Packing	Two piece molded Teflon* (PTFE)
Seat	Delrin** Soft-Seat.
Handle	"T" bar; 316 Stainless Steel or ASTM A108 Alloy Steel
Connection	National Pipe Thread, meeting specifications of ANSI B2.1
Finish	Stainless Steel is Passivated. Alloy Steel has a clear Zinc Dichromate finish
Stem Retaining Method	All valves feature integral back-seated stem for preventing accidental removal
Assembly	Bonnet is threaded into body and pinned into place

* Teflon is a registered trademark of DuPont
** Delrin is a registered trademark of DuPont
*** NACE valves are manufactured of 316 SS

Pattern	Size NPT	Part Number		C_v
		316 SST	Carbon	
FFG	1/4	VSS-FFG-14	VSC-FFG-14	0.60
	1/2	VSS-FFG-12	VSC-FFG-12	0.70
	3/4	VSS-FFG-34	VSC-FFG-34	2.35
	1	VSS-FFG-01	VSC-FFG-01	2.00
MFG	1/4	VSS-MFG-14	VSC-MFG-14	0.60
	1/2	VSS-MFG-12	VSC-MFG-12	0.70
	1/4 x 1/2	VSS-MFG-1412	VSC-MFG-1412	0.80
MFA	1/4	—	VSC-MFA-14	0.70
	1/2	—	VSC-MFA-12	0.70

Option	Suffix
Graphite Packing - High Temp.	H
NACE***	N
Panel Mount	P

Needle Valves Patterns and Dimensions

Metal-to-Metal - 316 Stainless Steel or Alloy

FFG and MFG
Double Female and Male/Female Globe Pattern

Dimen-sion	Nominal Sizes (inches [mm])					
	1/8	1/4	3/8	1/2	3/4	1
A	3.39 [86.0]	3.39 [86.0]	3.46 [88.0]	3.62 [92.0]	3.66 [93.0]	4.41 [112.0]
B		1.18 [30.0]		1.26 [32.0]	1.26 [32.0]	1.69 [43.0]
CF	2.36 [60.0]	2.36 [60.0]	2.68 [68.0]	2.68 [68.0]	2.68 [68.0]	3.15 [80.0]
CM		2.99 [76.0]		3.50 [89.0]	3.50 [89.0]	4.13 [105.0]
E	1.12 [28.5]	1.12 [28.5]	1.26 [32.0]	1.50 [38.0]	1.57 [40.0]	1.77 [45.0]
Orifice	0.17 [4.2]	0.17 [4.2]	0.25 [6.4]	0.28 [7.0]	0.35 [9.0]	0.47 [12.0]

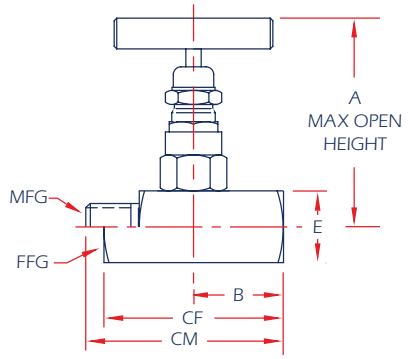

FFA and MFA
Double Female and Male/Female Angle Pat-

Dimen-sion	Nominal Sizes (inches [mm])					
	1/8	1/4	3/8	1/2	3/4	1
A	3.39 [86.0]	3.39 [86.0]	3.39 [86.0]	3.62 [92.0]	3.62 [92.0]	4.41 [112.0]
C	1.65 [42.0]	1.65 [42.0]	1.65 [42.0]	1.97 [50.0]	1.97 [50.0]	2.36 [60.0]
E	1.10 [28.0]	1.10 [28.0]	1.10 [28.0]	1.26 [32.0]	1.42 [36.0]	1.81 [46.0]
F	1.65 [42.0]	1.65 [42.0]	1.65 [42.0]	1.97 [50.0]	1.97 [50.0]	2.36 [60.0]
Orifice	0.17 [4.2]	0.17 [4.2]	0.25 [6.4]	0.28 [7.0]	0.35 [9.0]	0.47 [12.0]

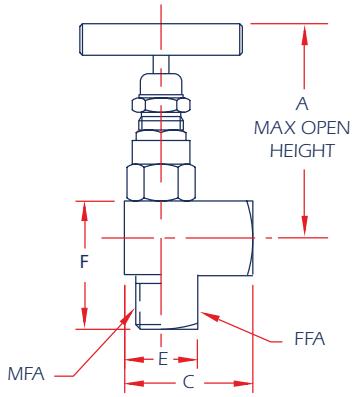

Soft-Seat - 316 Stainless Steel or Alloy

FFG and MFG
Double Female and Male/Female Globe Pattern

Dimension	Nominal Sizes (inches [mm])			
	1/4	1/2	1/4 x 1/2	1
A	3.39 [86.0]	3.62 [92.0]	3.62 [92.0]	4.41 [112.0]
B	1.18 [30.0]	1.26 [32.0]		1.26 [32.0]
CF	2.36 [60.0]	2.68 [68.0]		3.15 [80.0]
CM	2.99 [76.0]	3.50 [89.0]	3.50 [89.0]	
E	1.12 [28.5]	1.26 [32.0]	1.50 [38.0]	1.77 [45.0]
Orifice	0.17 [4.2]	0.28 [7.0]	0.28 [7.0]	0.47 [12.0]

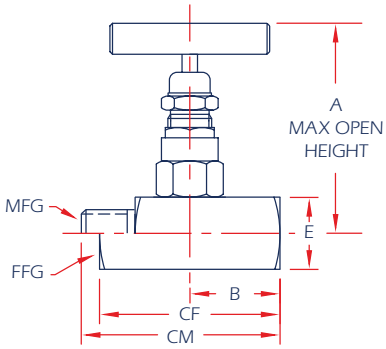

MFA
Male/Female Angle Pattern

Dimension	Nominal Sizes (inches [mm])	
	1/4	1/2
A	3.39 [86.0]	3.62 [92.0]
C	1.65 [42.0]	1.97 [50.0]
E	1.10 [28.0]	1.26 [32.0]
F	1.65 [42.0]	1.97 [50.0]
Orifice	0.17 [4.2]	0.28 [7.0]

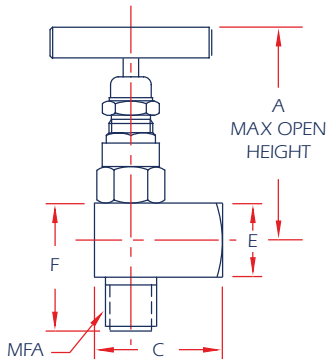

BelGAS Block/Bleed Needle Valves

Ideally used to isolate gauge legs and gauge reading, allow sampling to take place without loss of material and provide extra pressure ports with isolation capabilities and can be used only when needed.

- "T" Bar Handle
- Teflon* Packing
- Roll-Formed Stem Threads
- Precision-Machined Stem
- Below Stem Thread Packing Gland
- Hardened and Ground 316 Stainless Steel, Self-Centering, Non-Rotating Tip
- Carbon Steel or 316 SST Port Plug
- Pressure Rating, 10,000 PSI (70,000 kPa)

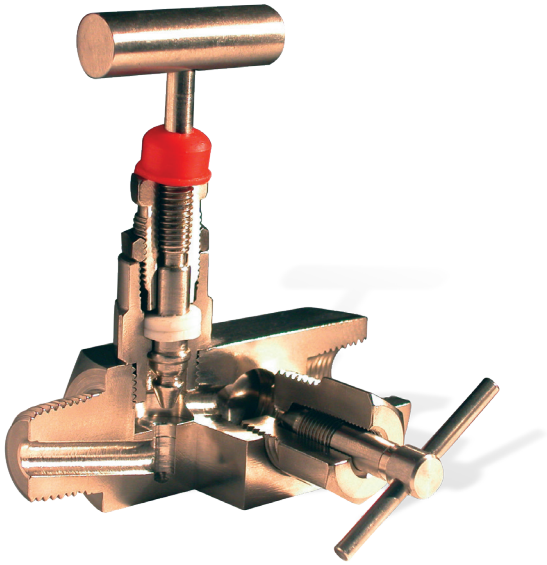

Specifications and Description

Body and Bonnet Material	ASTM A182F 316 Stainless Steel or ASTM A105 forged single piece steel, plated
Stem Material	316 Stainless Steel
Pressure/ Temperature Rating	See Page 7 for Temperature / Pressure limits
Packing	Two piece molded Teflon* (PTFE)
Seat	Metal-to-Metal
Handle	"T" Bar; 316 Stainless Steel or ASTM A108 Alloy Steel
Connection	National Pipe Thread, meeting specifications of ANSI B2.1
Finish	Stainless Steel is Passivated. Alloy Steel has a clear Zinc Dichromate finish
Stem Retaining Method	All valves feature integral back-seated stem for preventing accidental removal
Assembly	Bonnet is threaded into body and pinned into place.

* Teflon is a registered trademark of DuPont.

Pattern	Size NPT	Part Number		C_v
		316 SST	Carbon	
Block/Bleed	1/2 x 1/2	BHS-MFG-12	BHC-MFG-12	0.40
	3/4 x 1/2	BHS-MFG-3412	BHC-MFG-3412	0.40

Option	Suffix
Graphite Packing - High Temp.	H

Dimension	Nominal Size (inches [mm])	
	1/2	3/4 x 1/2
A	3.54 [90.0]	3.54 [90.0]
B	1.50 [38.0]	1.50 [38.0]
C	3.74 [95.0]	3.74 [95.0]
Orifice	0.28 [7.0]	0.28 [7.0]

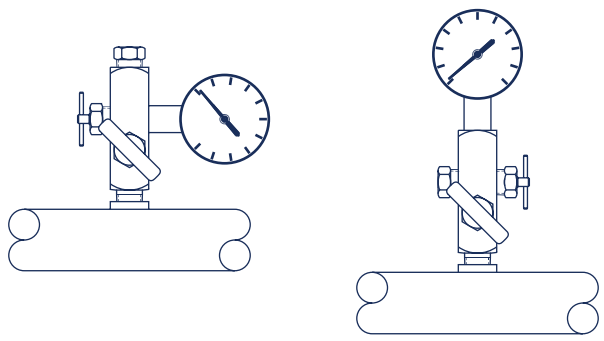

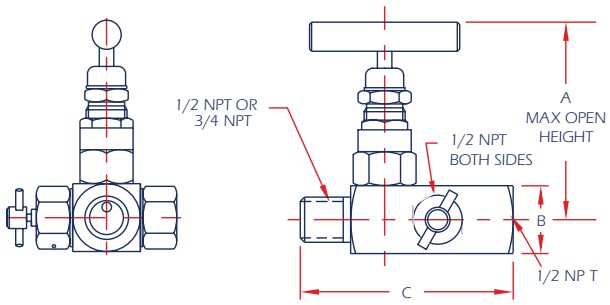

BelGAS Miniature Needle Valves

Miniature size for applications where space is limited.
Ideal for test stand and general equipment.

- "T" Bar Handle or Thumb Wheel
- Roll-Formed Stem Threads
- Precision-Machined Stem
- Teflon* Packing
- Bonnet Locking Pin Prevents Accidental Removal
- Metal-to-Metal and Soft Seat
- Pressure Rating, 6,000 PSI (42,000 kPa)

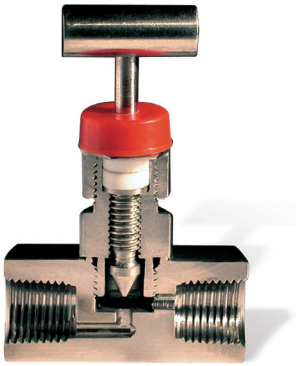

Specifications and Description

Body and Bonnet Material	ASTM A479 316 Stainless Steel or ASTM A108 Barstock Steel, Plated
Stem Material	316 Stainless Steel
Bonnet Cap (Protective Cover)	Low Density Polyethylene, Red
Pressure/ Temperature Rating	See Page 7 for Temperature / Pressure limits
Packing	Molded Teflon* (PTFE)
Seat	Metal-to-Metal and Delrin** Soft-Seat
Handle	"T" Bar; 316 Stainless Steel / ASTM A108 Alloy Steel / Aluminum Anodized Thumb Wheel
Connection	National Pipe Thread, meeting specifications of ANSI B2.1
Finish	Stainless Steel is Passivated. Alloy Steel has a clear Zinc Dichromate finish
Stem Retaining Method	All valves feature integral back-seated stem for preventing accidental removal
Assembly	Bonnet is threaded into body and pinned into place

* Teflon is a registered trademark of DuPont.
** Delrin is a registered trademark of DuPont.

Pattern	Size NPT	Part Number		Seat	C_v
		316 SST	Carbon		
FFG	1/8	MHS-FFG-18	MHC-FFG-18	Hard	0.25
	1/8	MHS-FFG-18W	MHC-FFG-18W	Hard	0.25
	1/4	MHS-FFG-14	MHC-FFG-14	Hard	0.25
	1/4	MHS-FFG-14W	MHC-FFG-14W	Hard	0.25

Dimension	Nominal Size (inches [mm])	
	1/8	1/4
A	2.44 [62.0]	2.44 [62.0]
B	0.87 [22.0]	0.87 [22.0]
C	1.89 [48.0]	1.89 [48.0]
Orifice	0.13 [3.2]	0.13 [3.2]

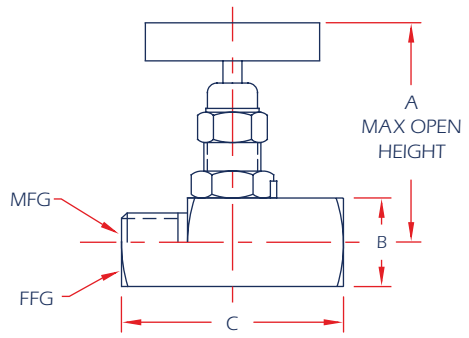

BelGAS Needle Valve Temerature Ratings

Minimum Applicable Temperatures;
Cast steel - ASTM-A-105 - 20° F / - 28°C
Stainless - ASTM-A-479 - 65° F / - 53°C

Temperatures up to 300° F use a PTFE packing material
Temperatures above 300° F use Graphoil packing material

For 600 PSIG Rated Valves			
Max Temperature		Max Presure for Max Temperature	
˚F	˚C	PSIG	MPa
100	38	6,000	41.4
200	93	3,000	20.4
250	121	1,600	11.0
300	149	1,300	9.0
350	177	1,200	8.3
400	204	1,000	6.8

For 10,000 PSIG Rated Valves & Manifolds			
Max Temperature		Max Presure for Max Temperature	
˚F	˚C	PSIG	MPa
100	38	10,000	69.0
200	93	9,290	64.0
250	121	8,840	61.0
300	149	8,390	57.8
400	204	7,705	53.2
450	232	7,435	51.3
500	260	7,165	49.0
600	316	6,770	46.7

Notes:

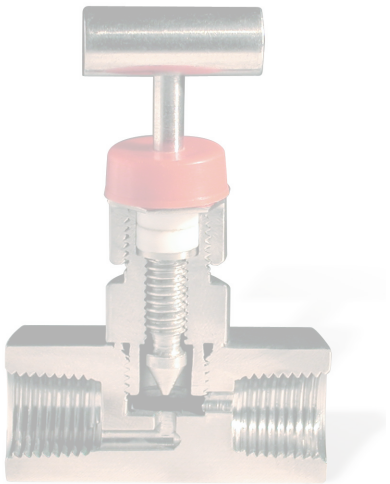

P627

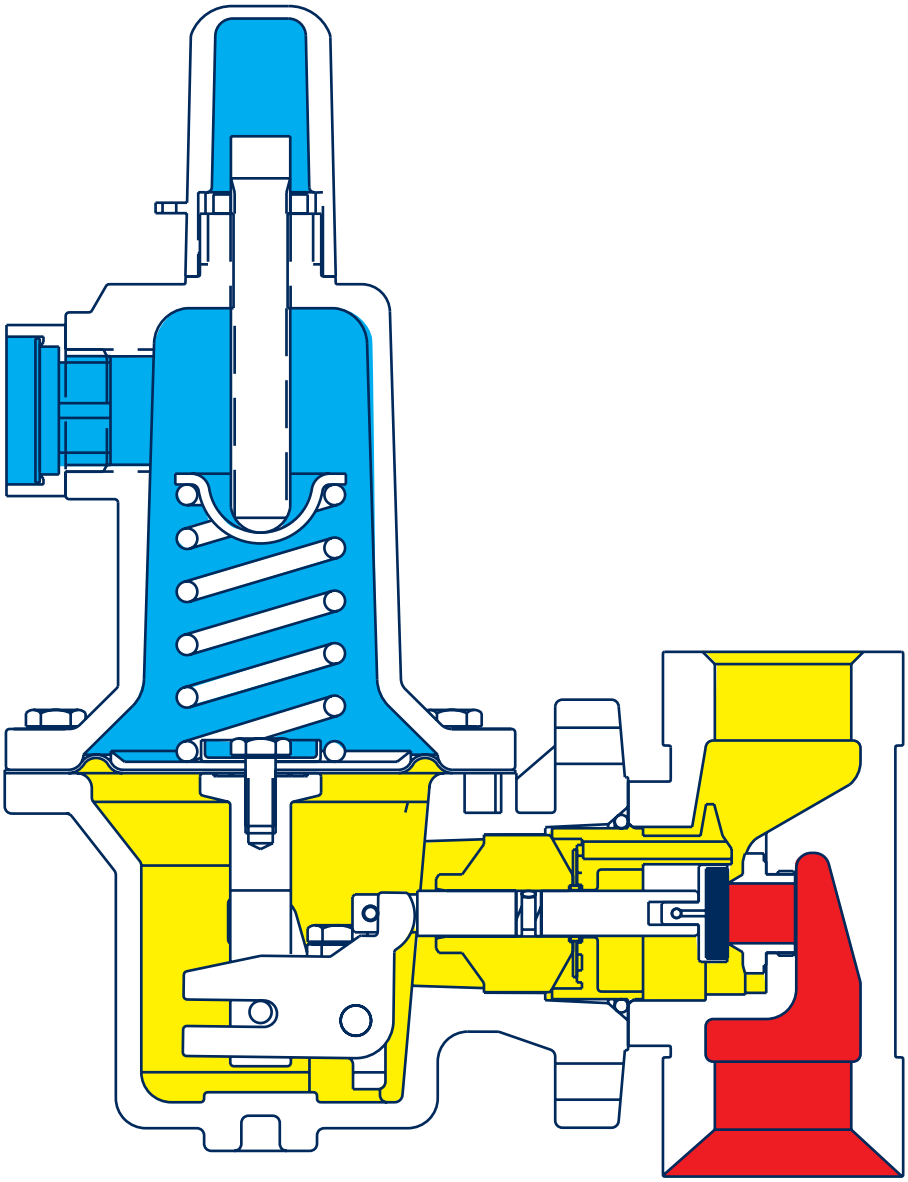

Inlet Pressure
Outlet Pressure
Atmospheric Pressure

F627

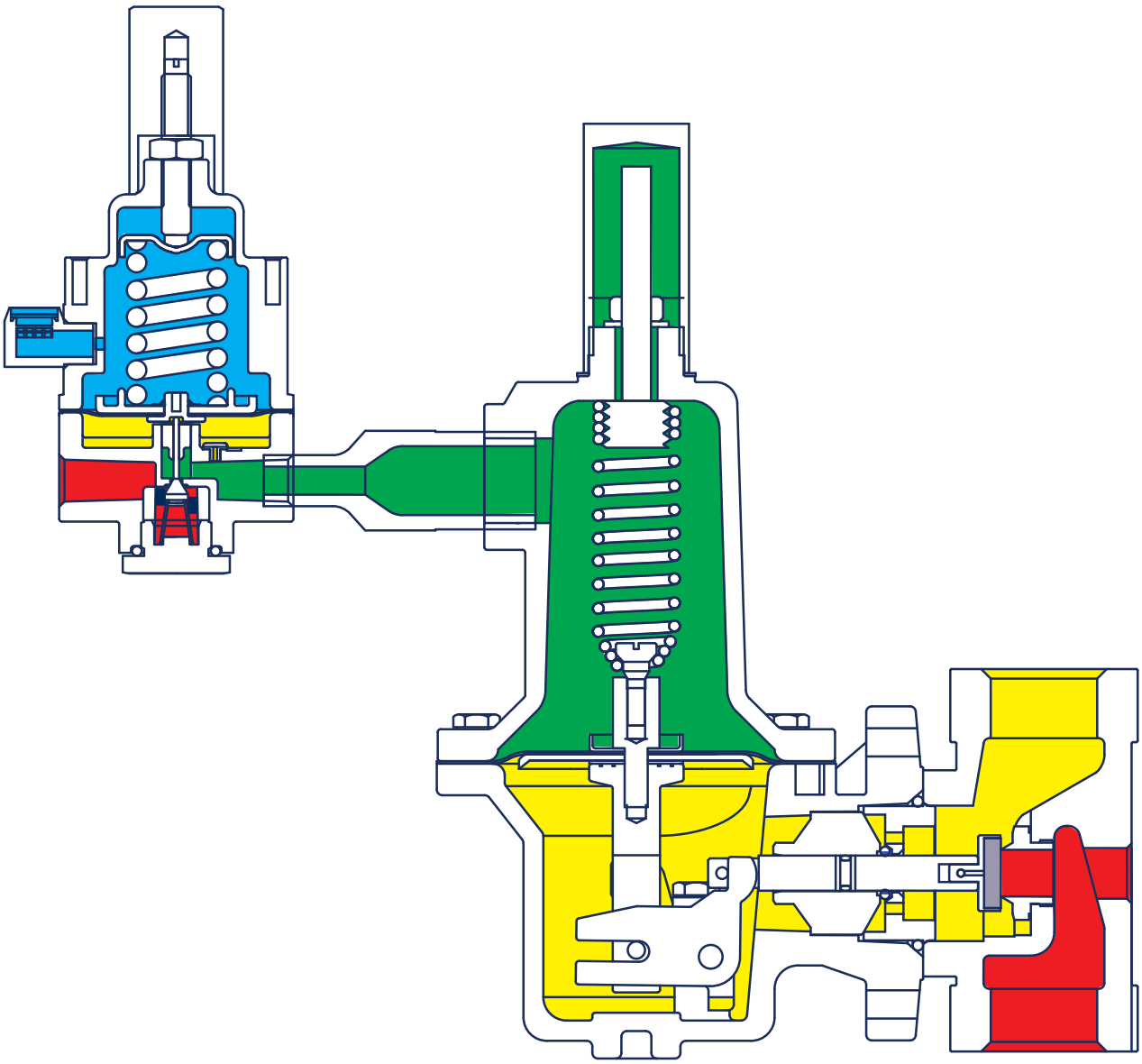

Inlet Pressure
Outlet Pressure
Atmospheric Pressure
Loading Pressure

P630

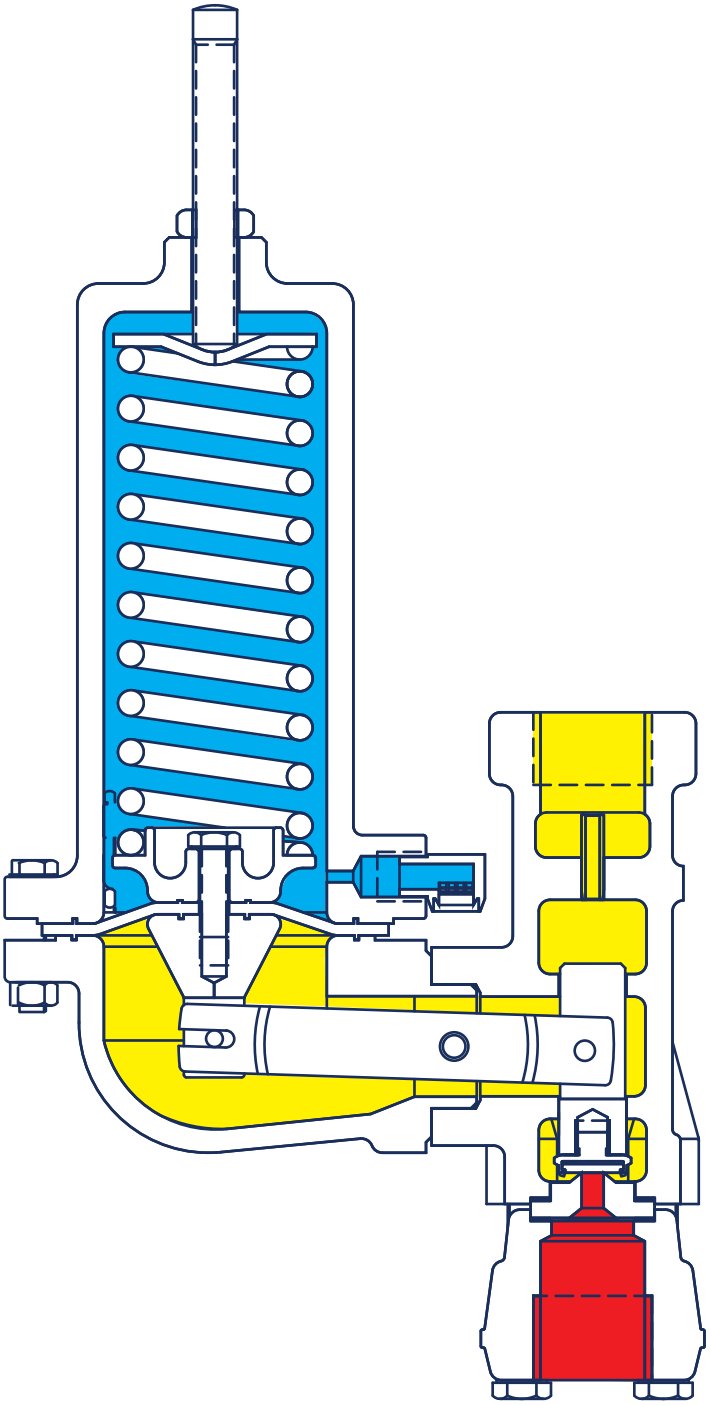

Inlet Pressure
Outlet Pressure
Atmospheric Pressure

P630R

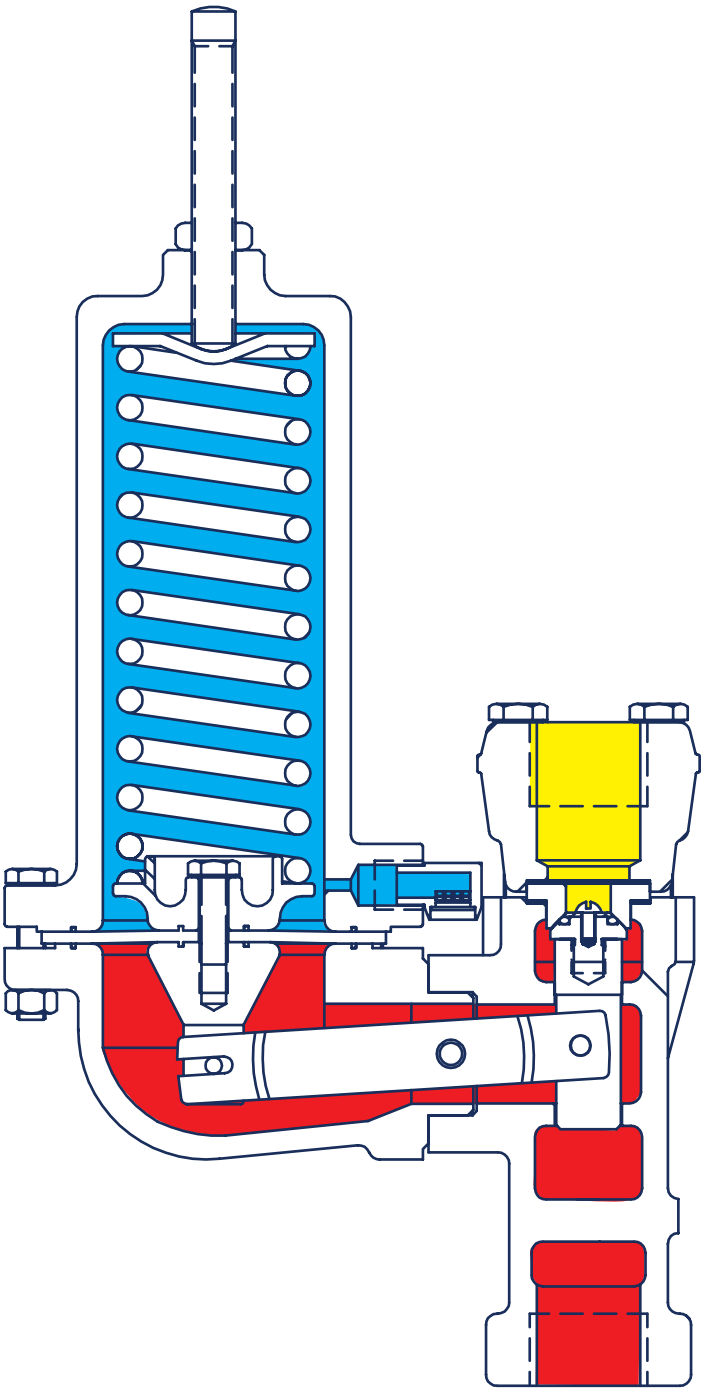

Inlet Pressure
Exhaust Pressure
Atmospheric Pressure

F289 1”

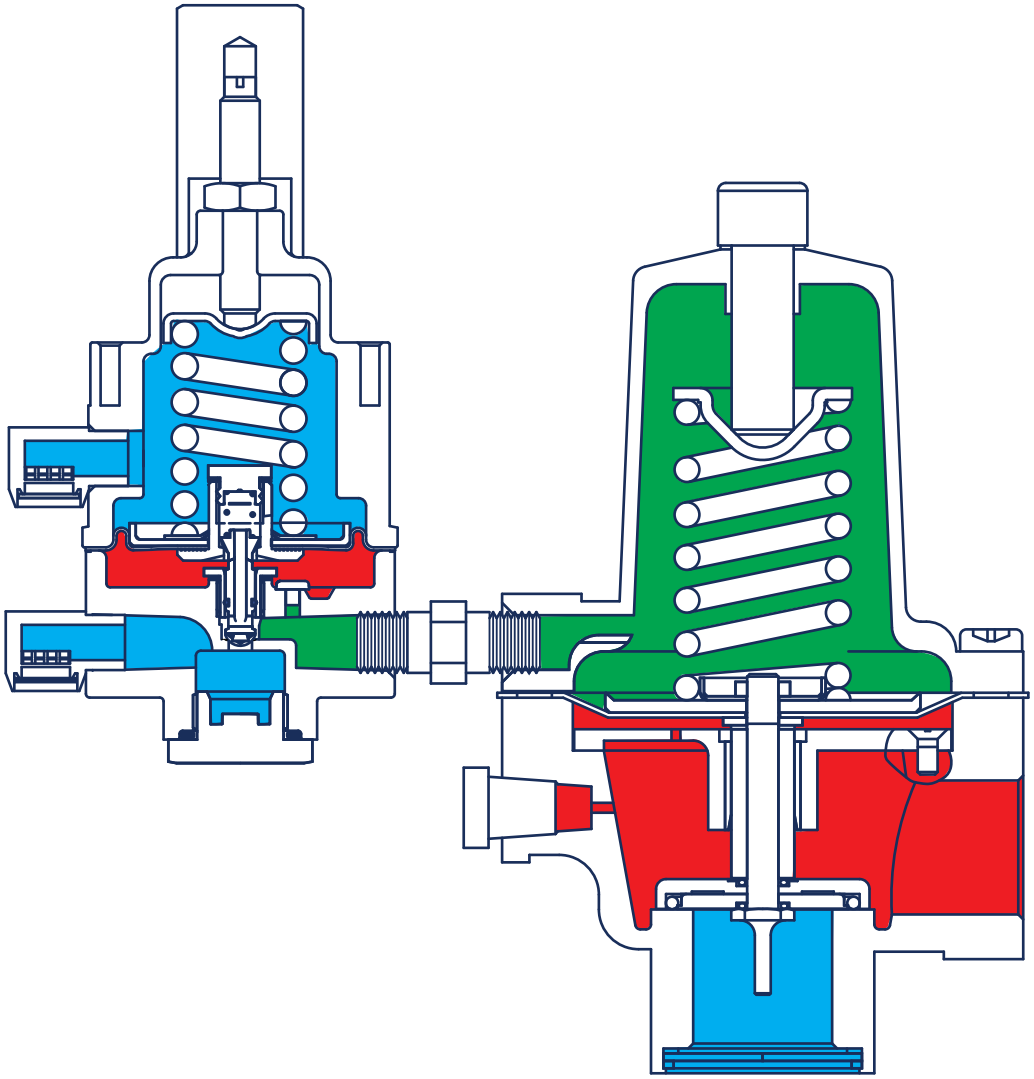

Inlet Pressure
Atmospheric Pressure
Loading Pressure

P289 2”

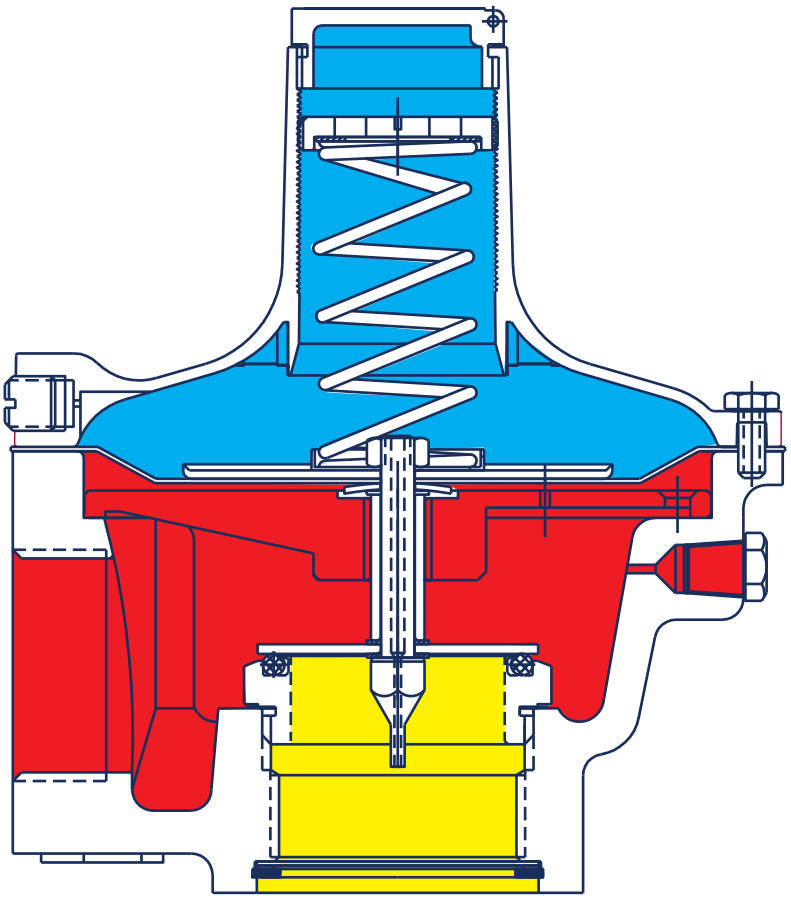

Inlet Pressure

Exhaust Pressure

Atmospheric Pressure

F289 1”

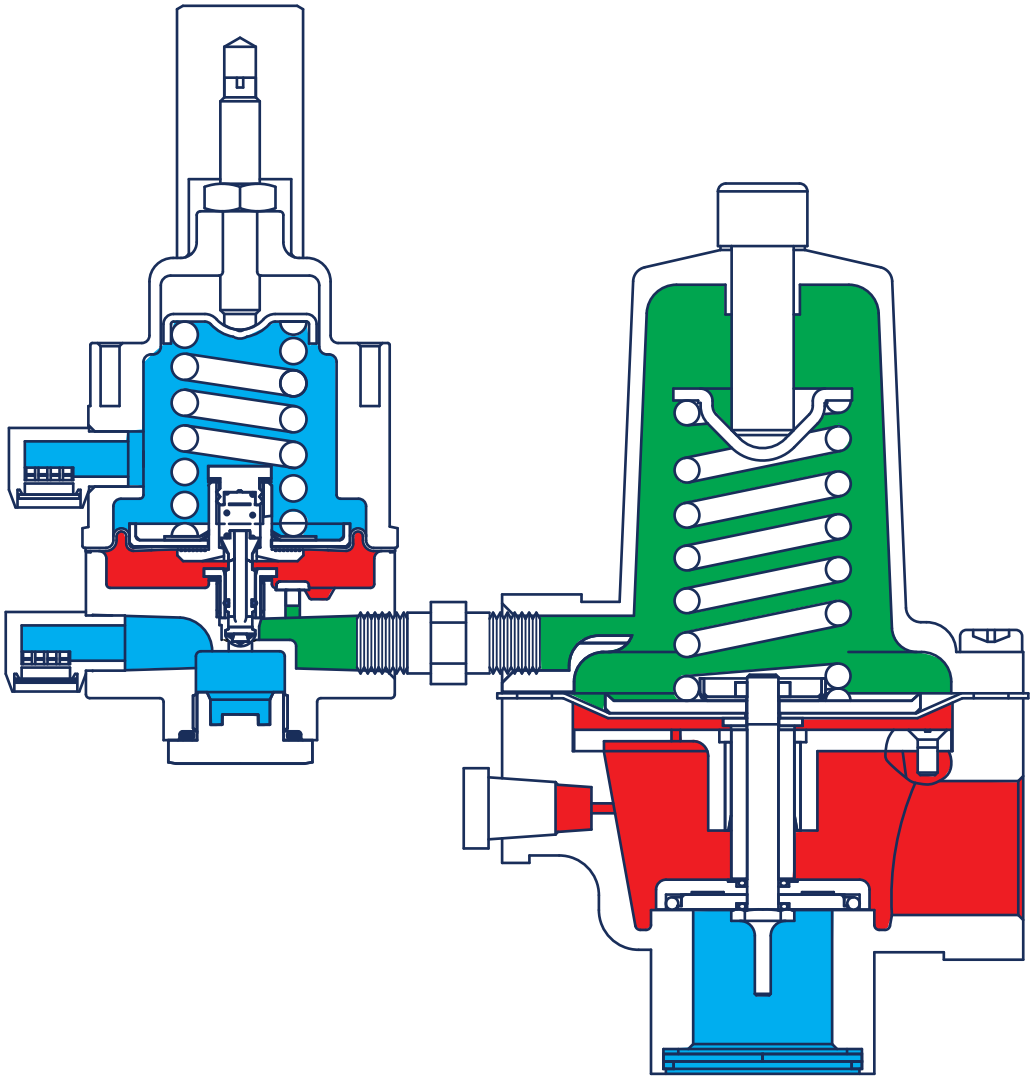

Inlet Pressure
Atmospheric Pressure
Loading Pressure

F289 2"

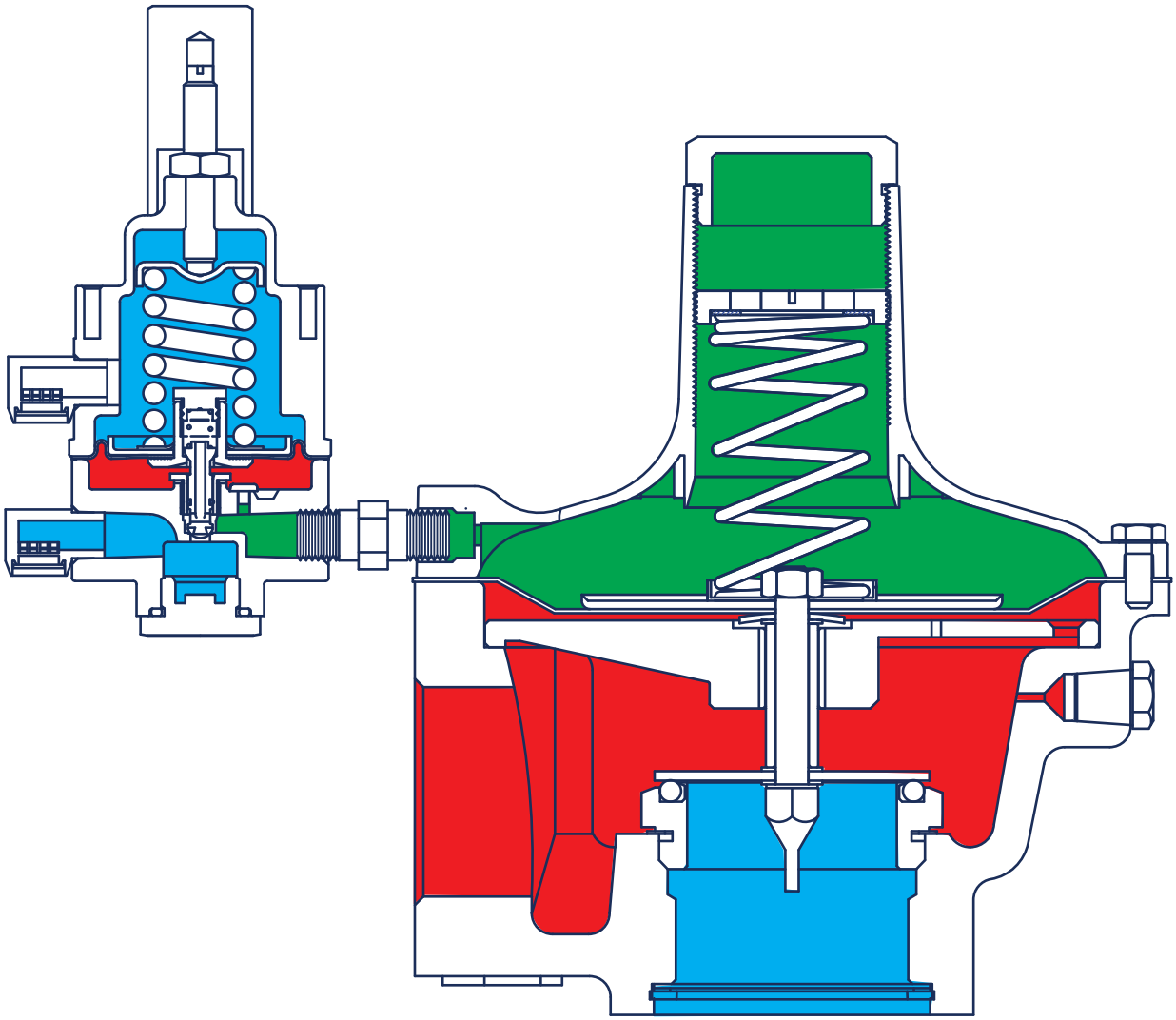

Inlet Pressure
Atmospheric Pressure
Loading Pressure

P289RC

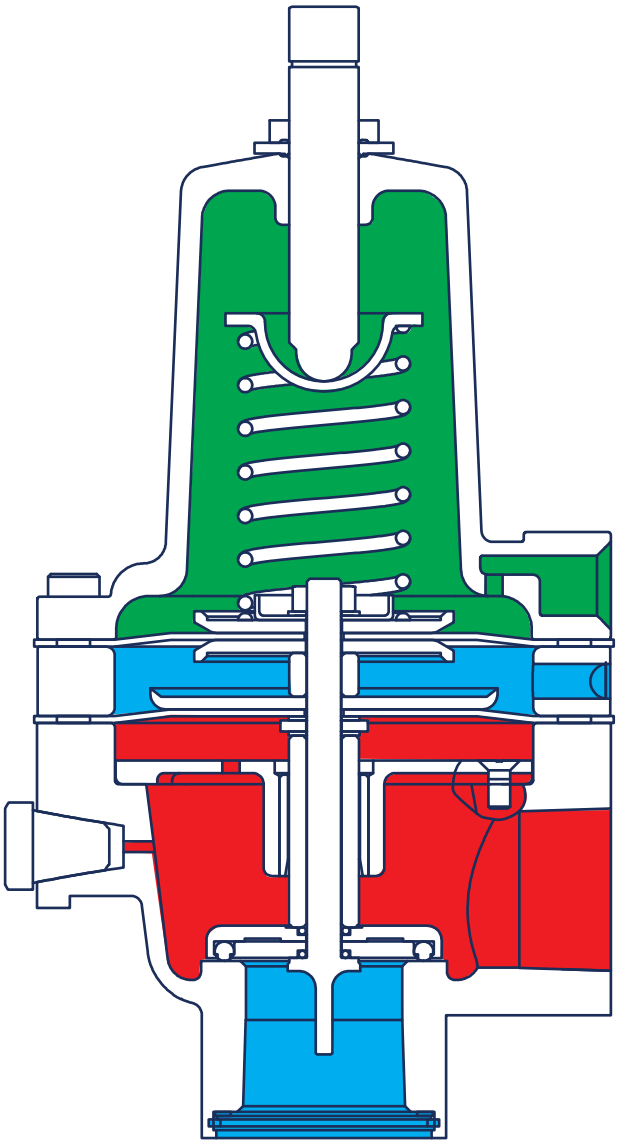

Inlet Pressure
Atmospheric Pressure
Loading Pressure

P1808

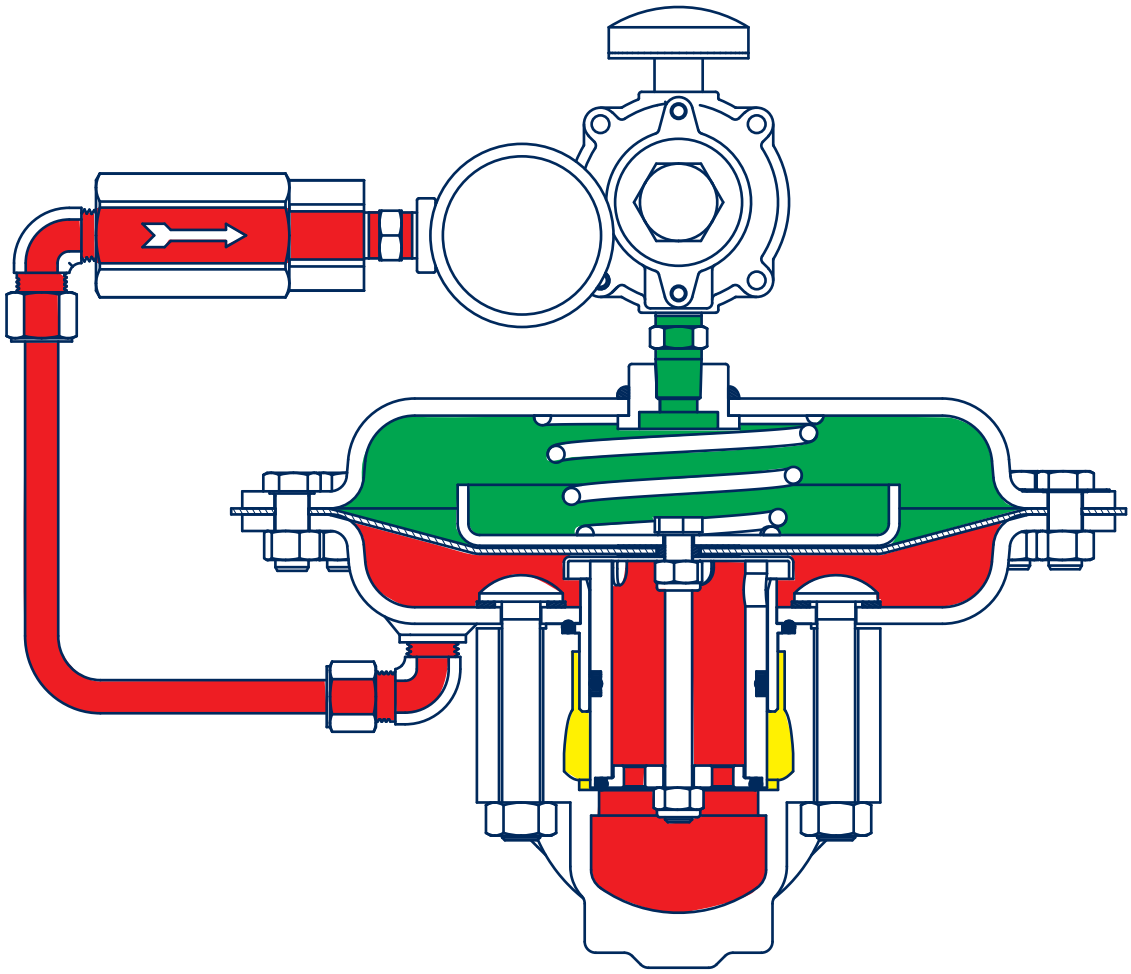

Inlet Pressure
Outlet Pressure
Loading Pressure

P200

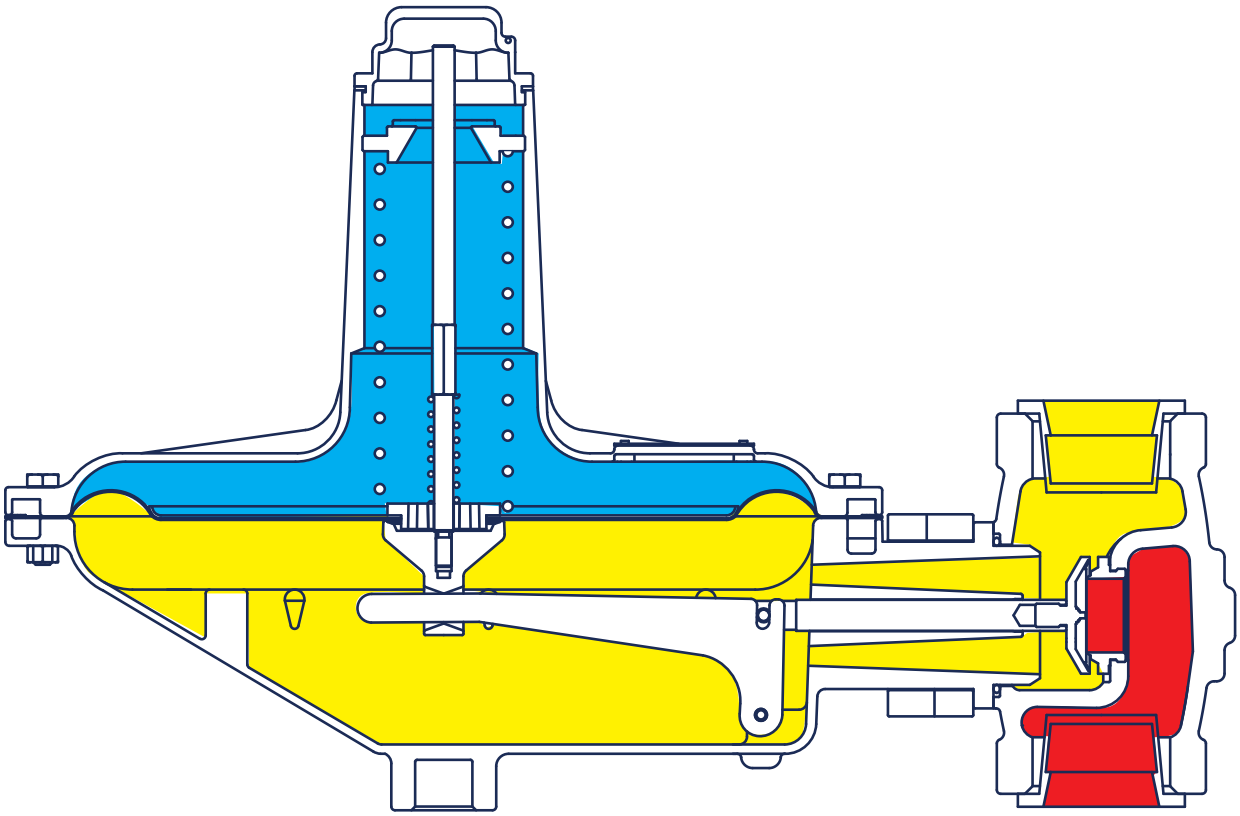

Inlet Pressure
Outlet Pressure
Atmospheric Pressure

P203

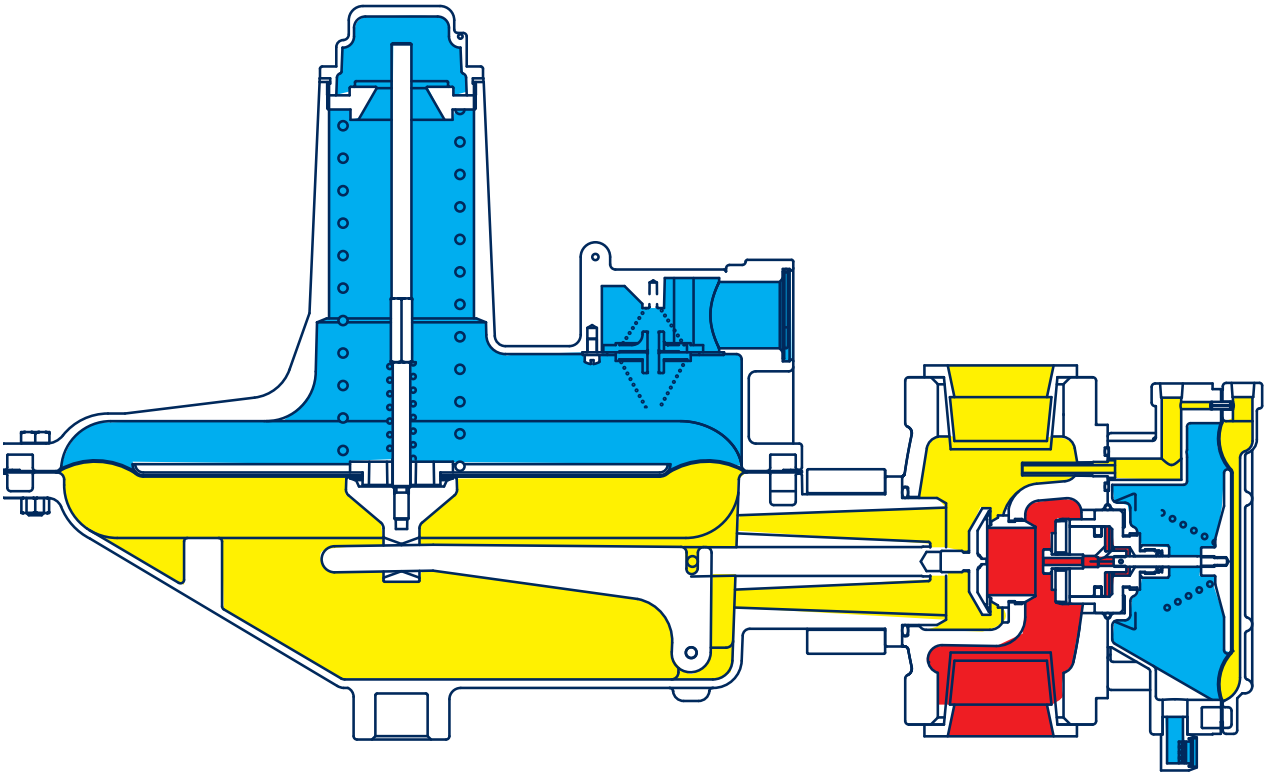

Inlet Pressure
Outlet Pressure
Atmospheric Pressure

P212

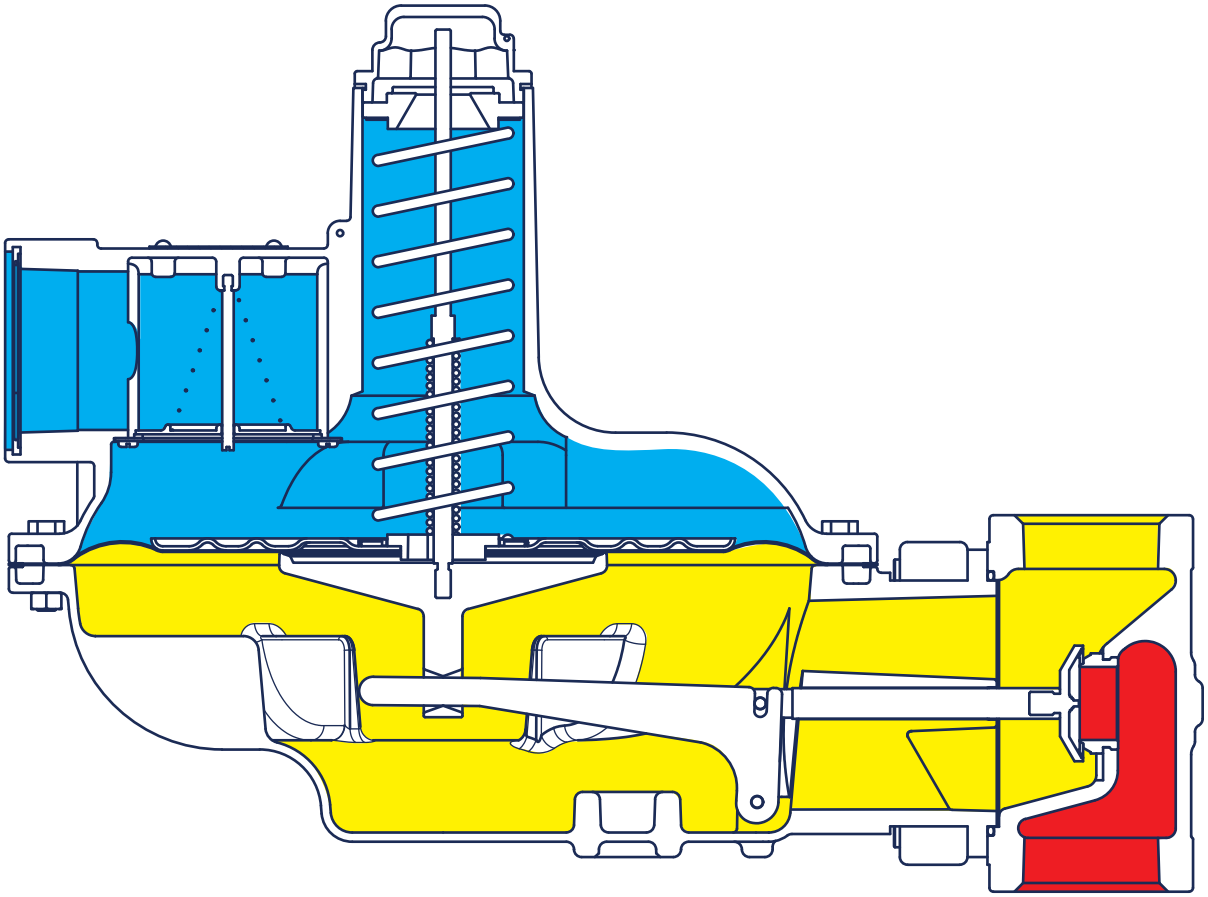

Inlet Pressure
Outlet Pressure
Atmospheric Pressure

F200

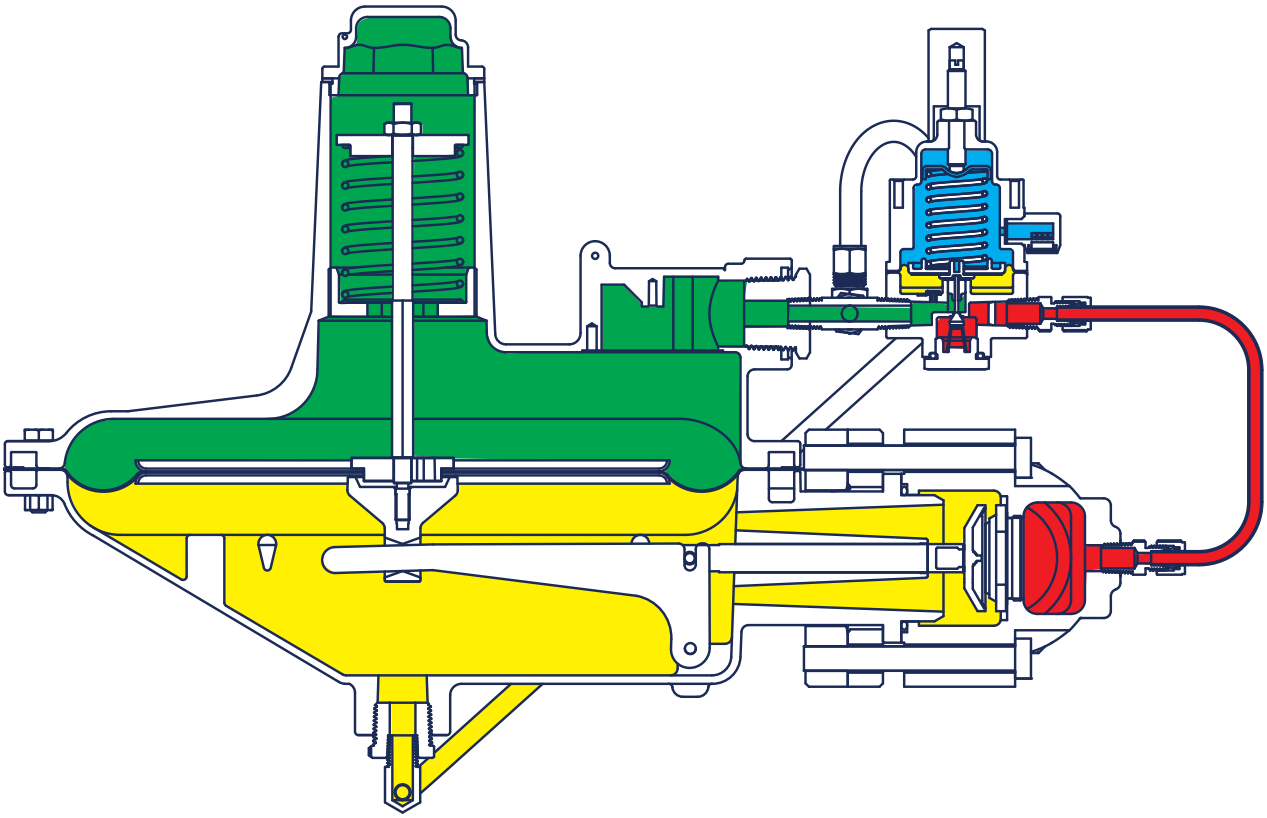

Inlet Pressure
Outlet Pressure
Atmospheric Pressure
Loading Pressure

P300

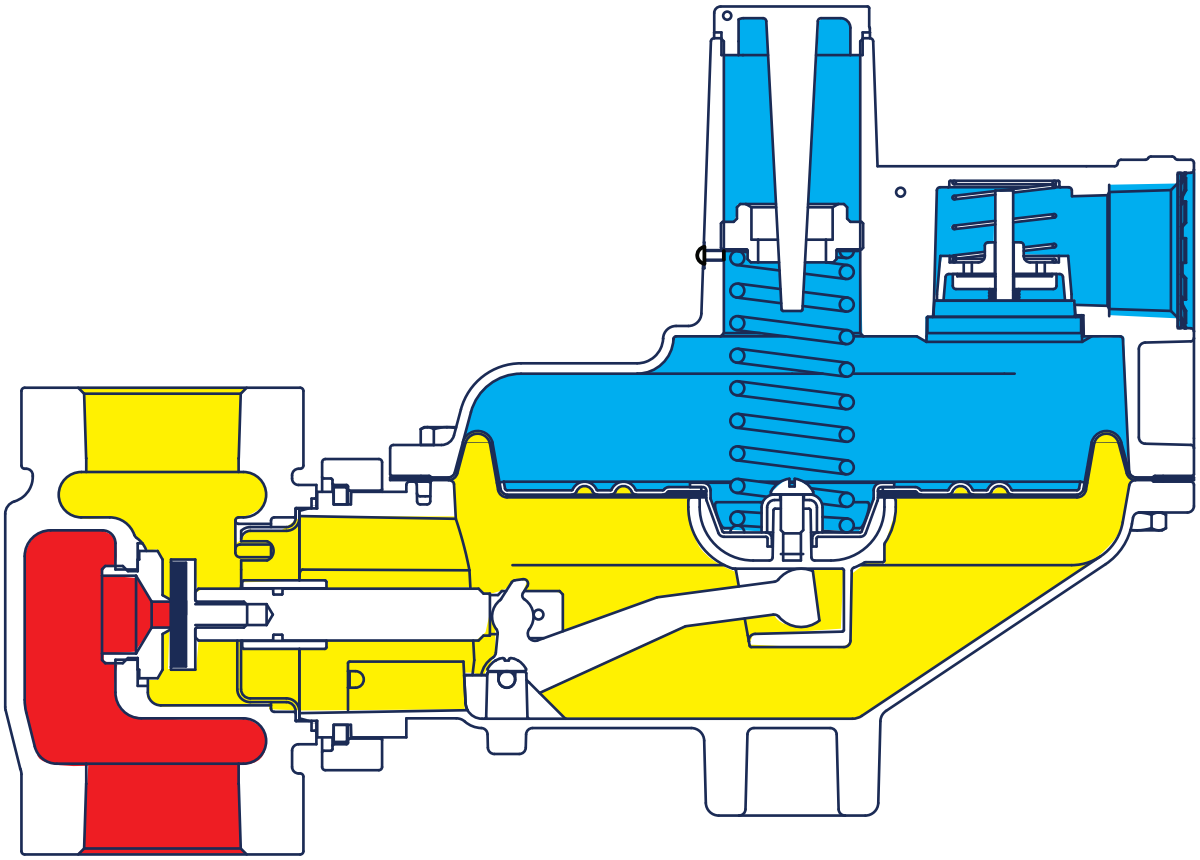

Inlet Pressure
Outlet Pressure
Atmospheric Pressure

P600

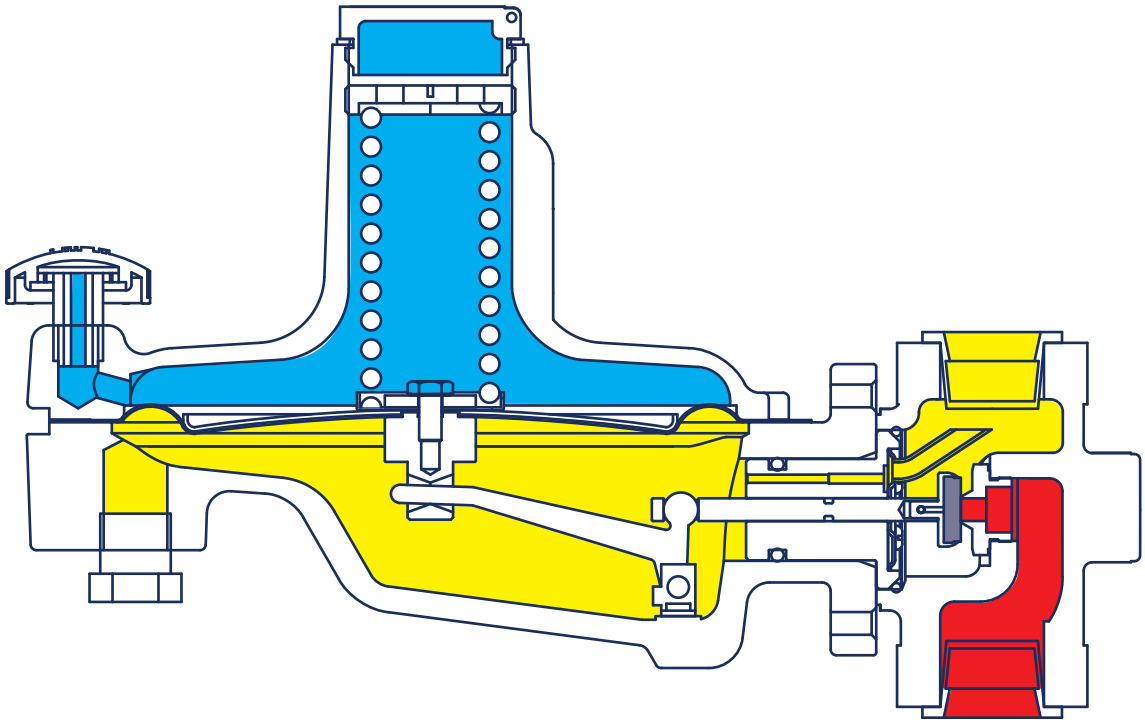

Inlet Pressure
Outlet Pressure
Atmospheric Pressure

P143

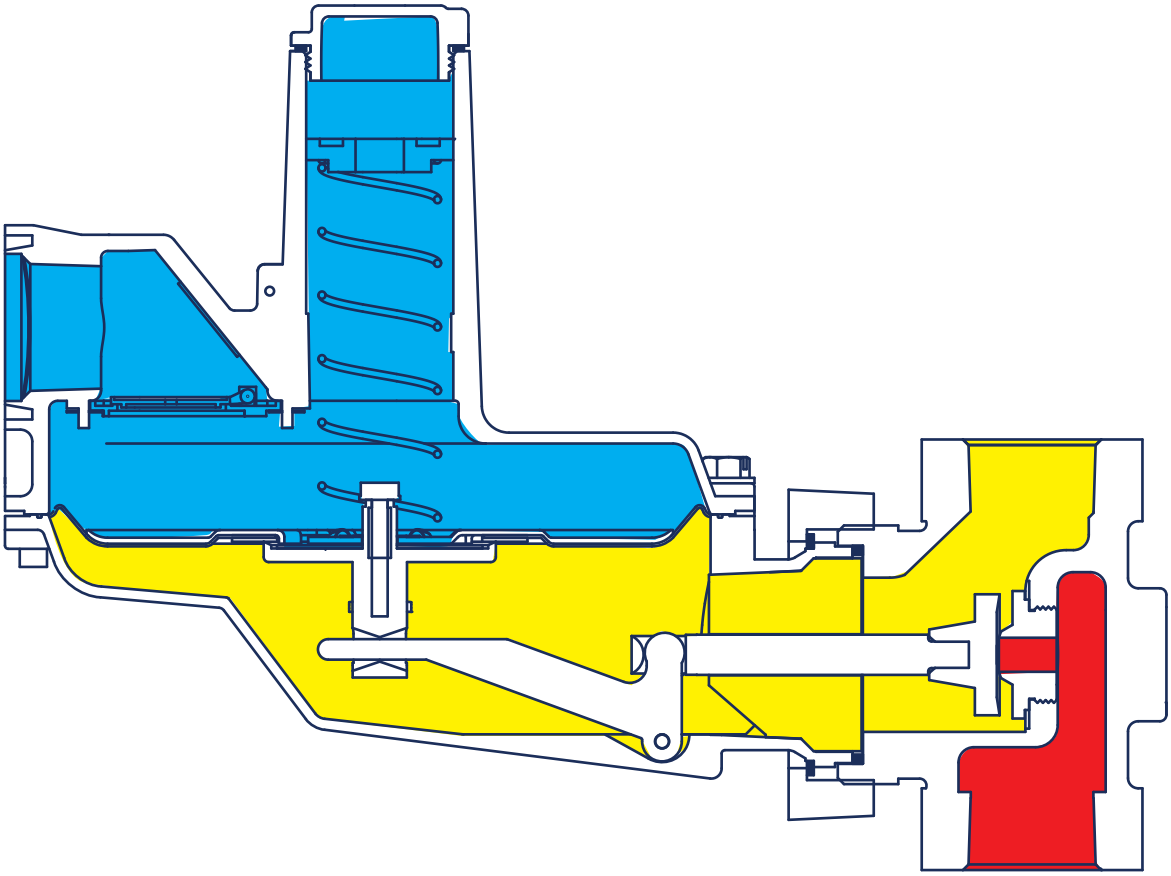

Inlet Pressure
Outlet Pressure
Atmospheric Pressure

P140

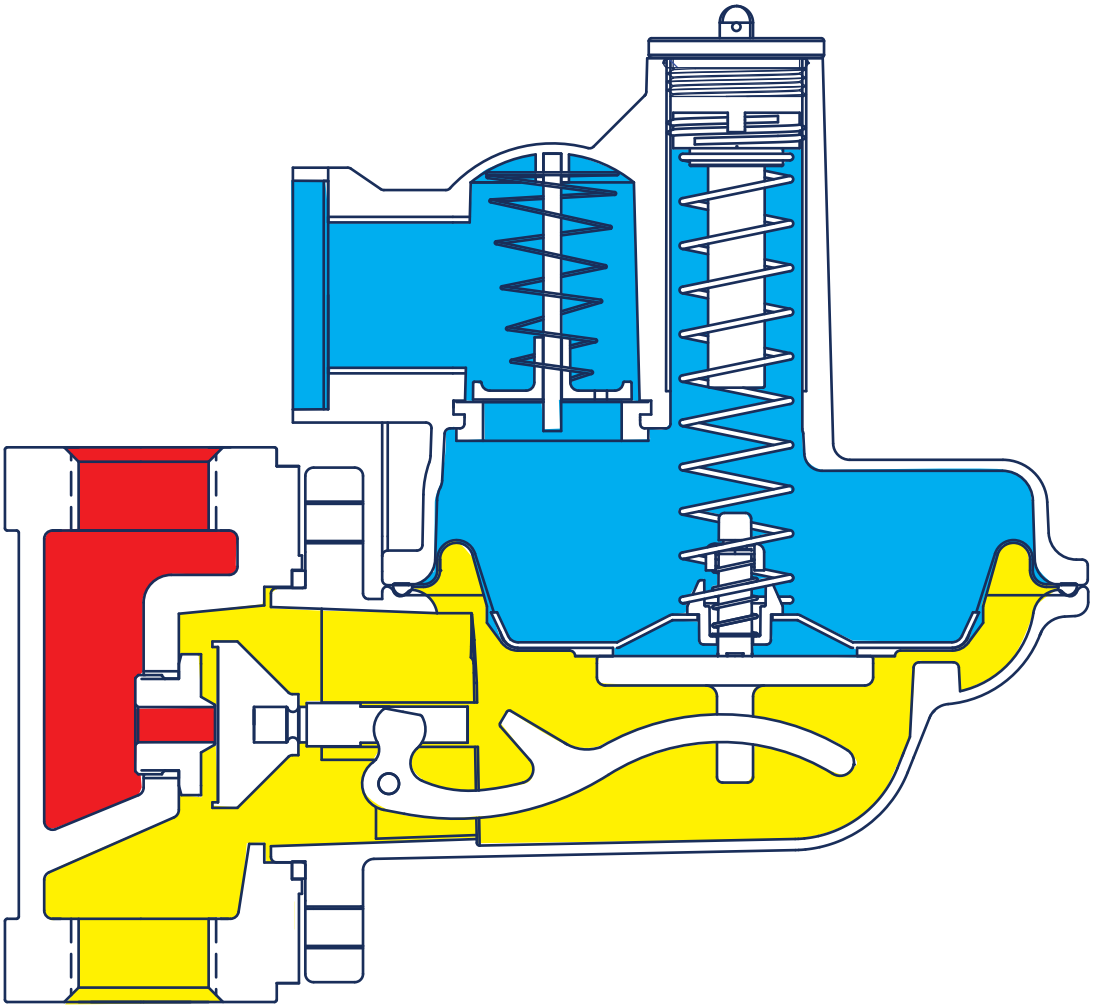

Inlet Pressure
Outlet Pressure
Atmospheric Pressure

P133 H

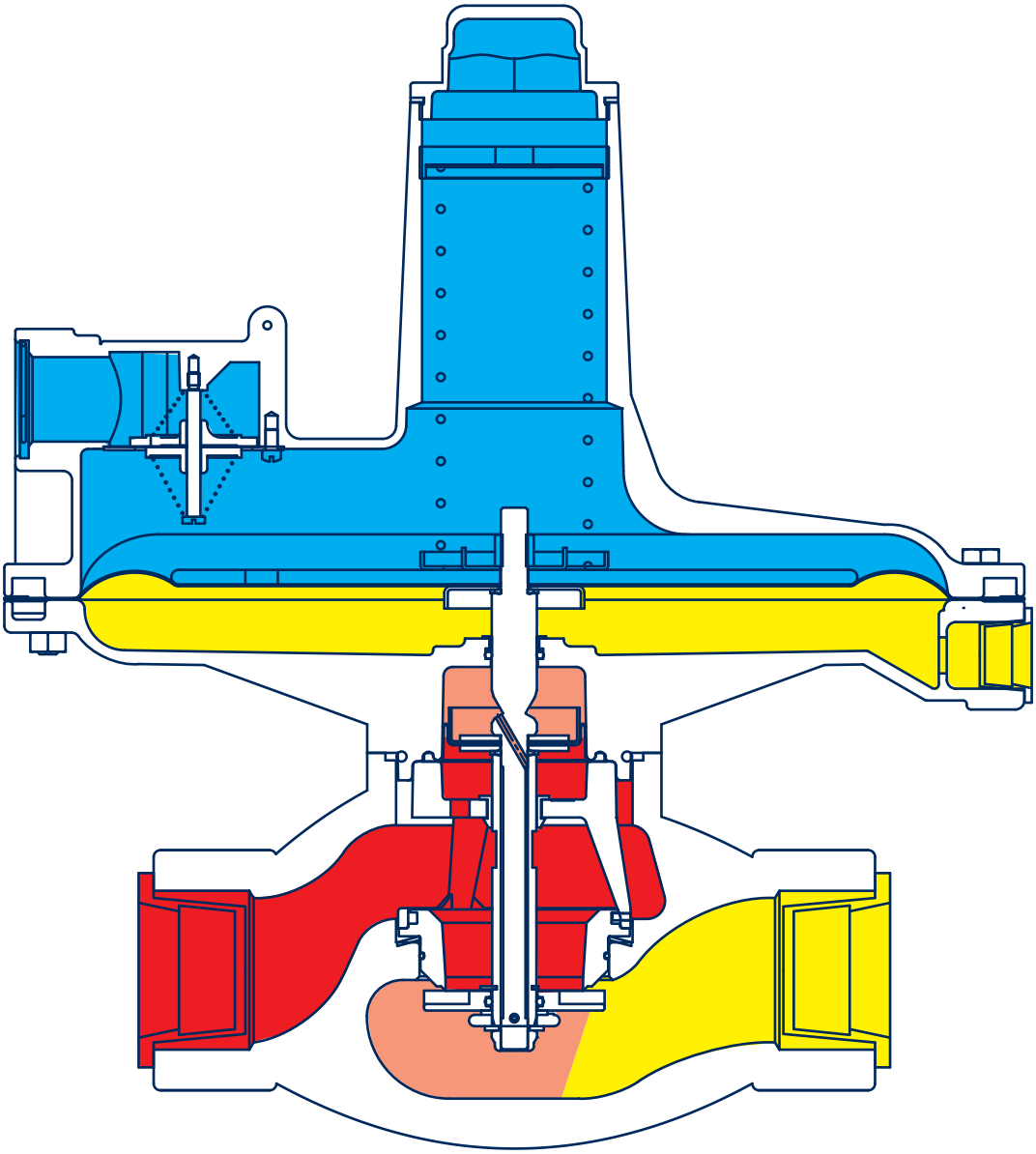

Inlet Pressure
Boost Pressure
Outlet Pressure
Atmospheric Pressure

P99

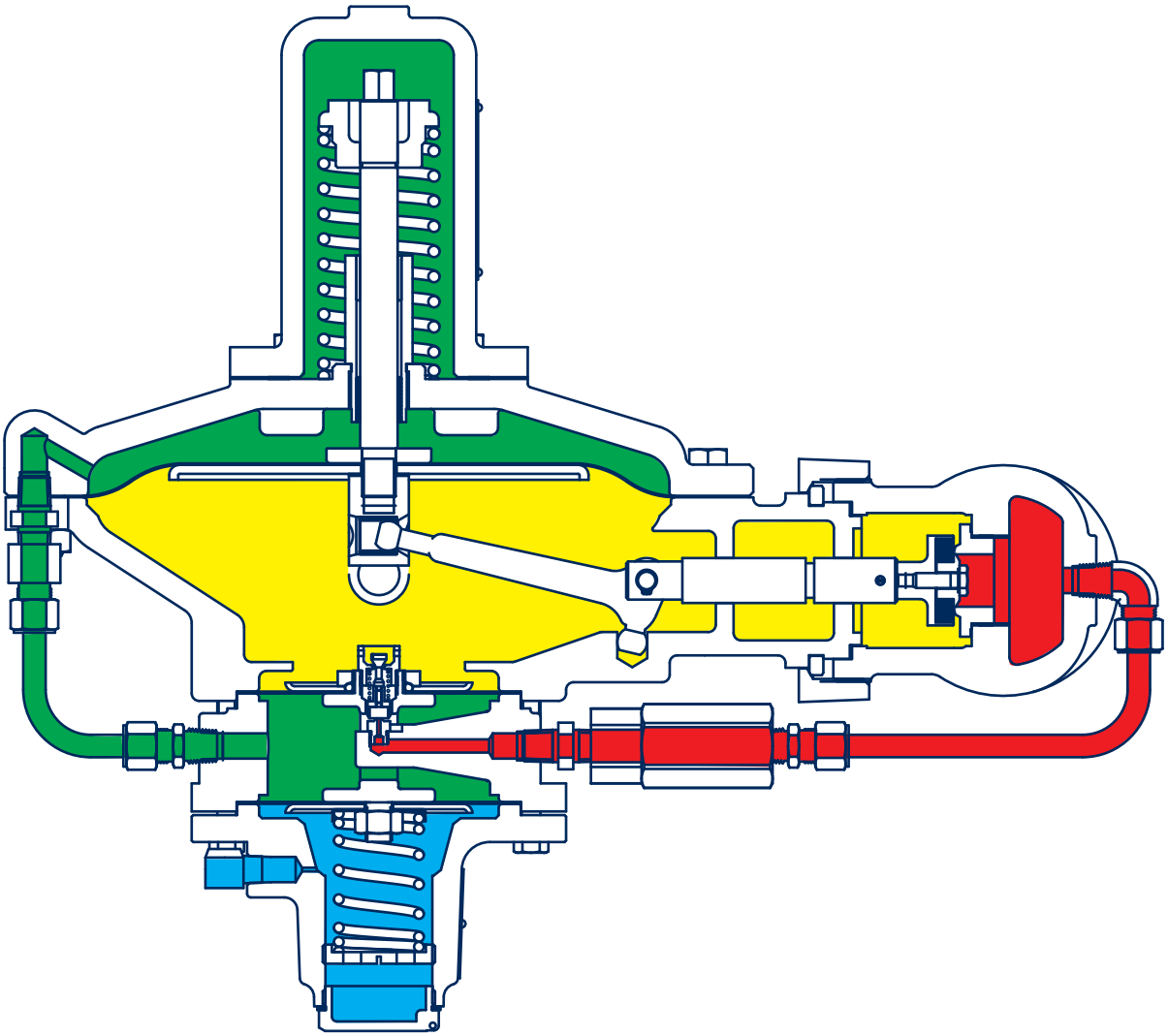

Inlet Pressure
Outlet Pressure
Atmospheric Pressure
Loading Pressure

P95H 1/2 NPT

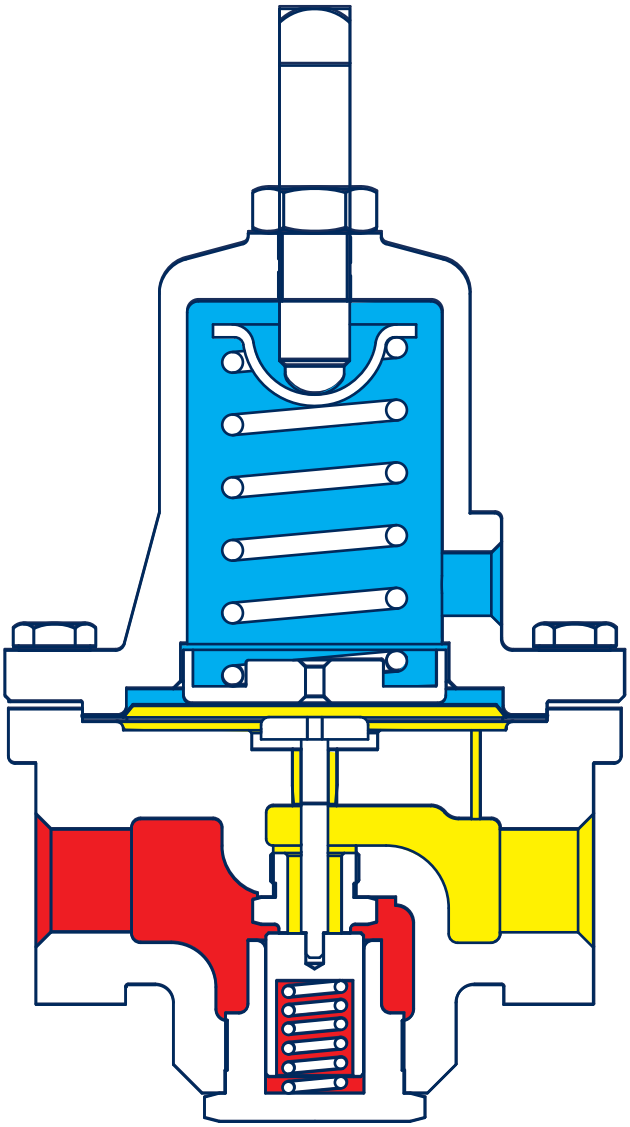

Inlet Pressure
Outlet Pressure
Atmospheric Pressure

P95H 3/4 NPT

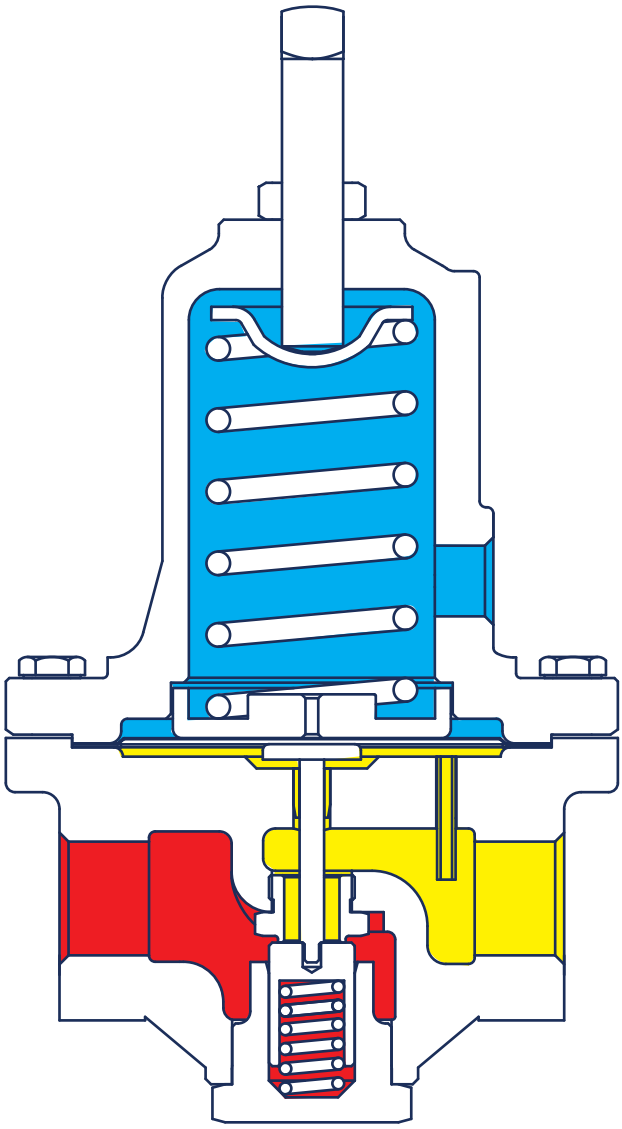

Inlet Pressure
Outlet Pressure
Atmospheric Pressure

P98H

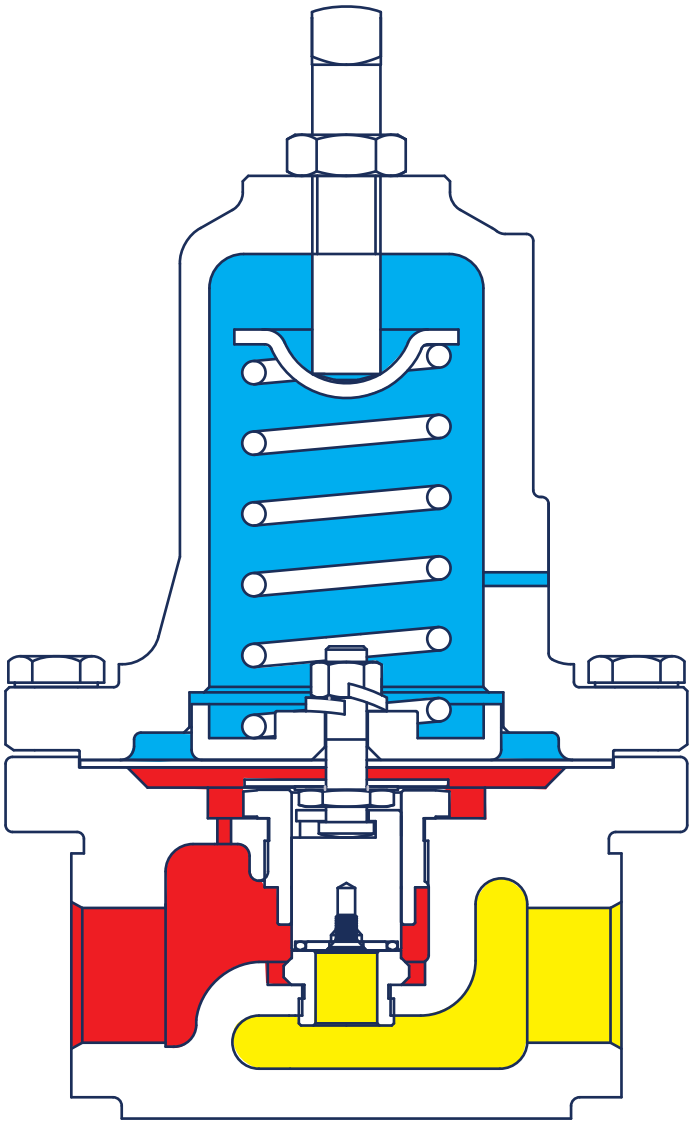

Inlet Pressure
Exhaust Pressure
Atmospheric Pressure

P39

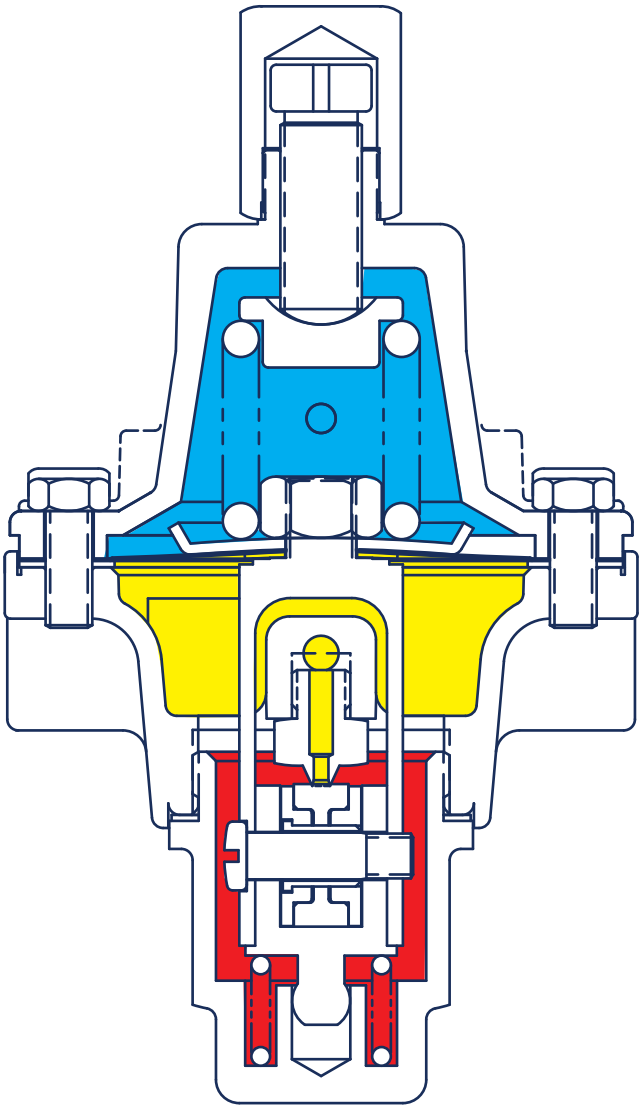

Inlet Pressure
Outlet Pressure
Atmospheric Pressure

P50

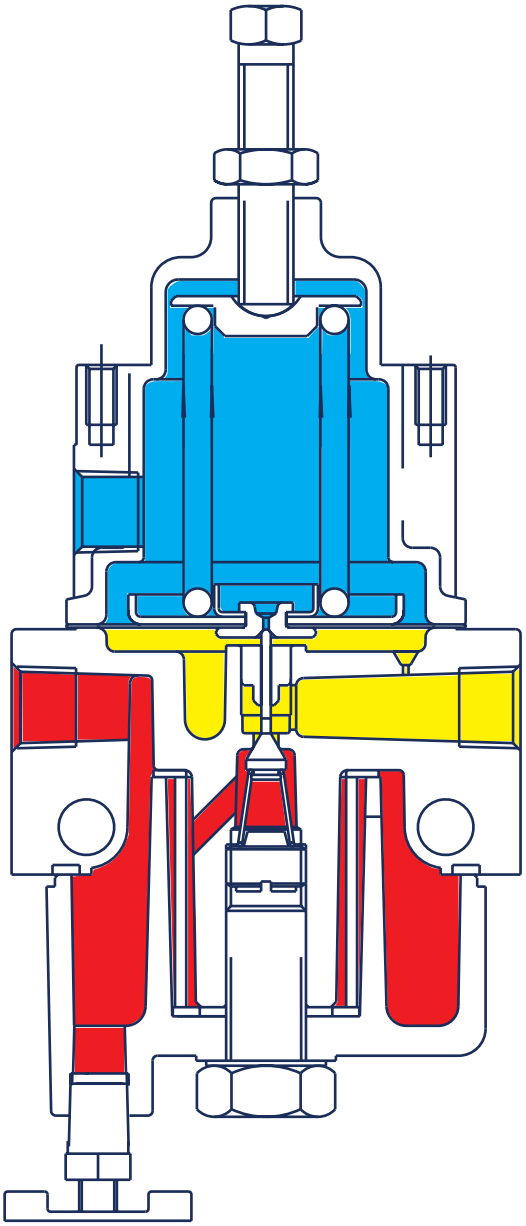

Inlet Pressure
Outlet Pressure
Atmospheric Pressure

P912

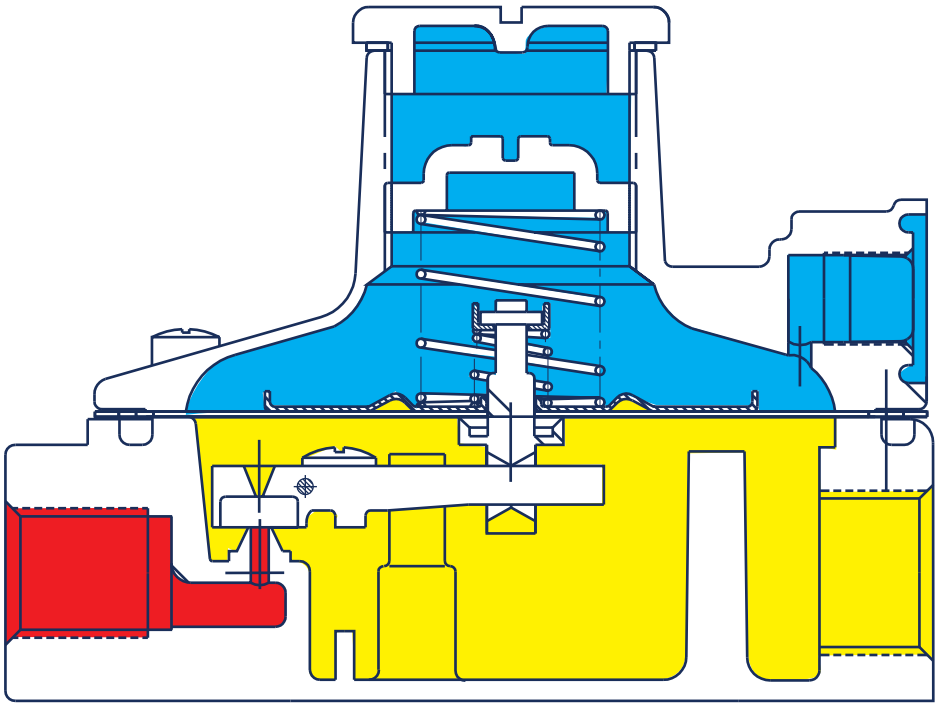

Inlet Pressure
Outlet Pressure
Atmospheric Pressure

P37

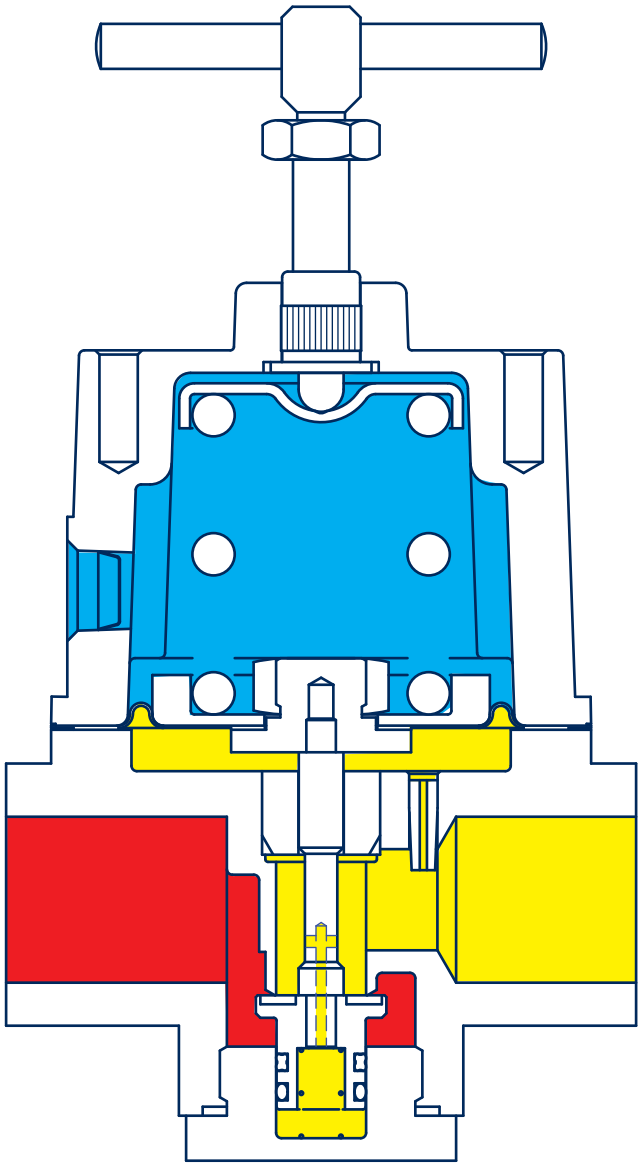

Inlet Pressure
Outlet Pressure
Atmospheric Pressure

P119

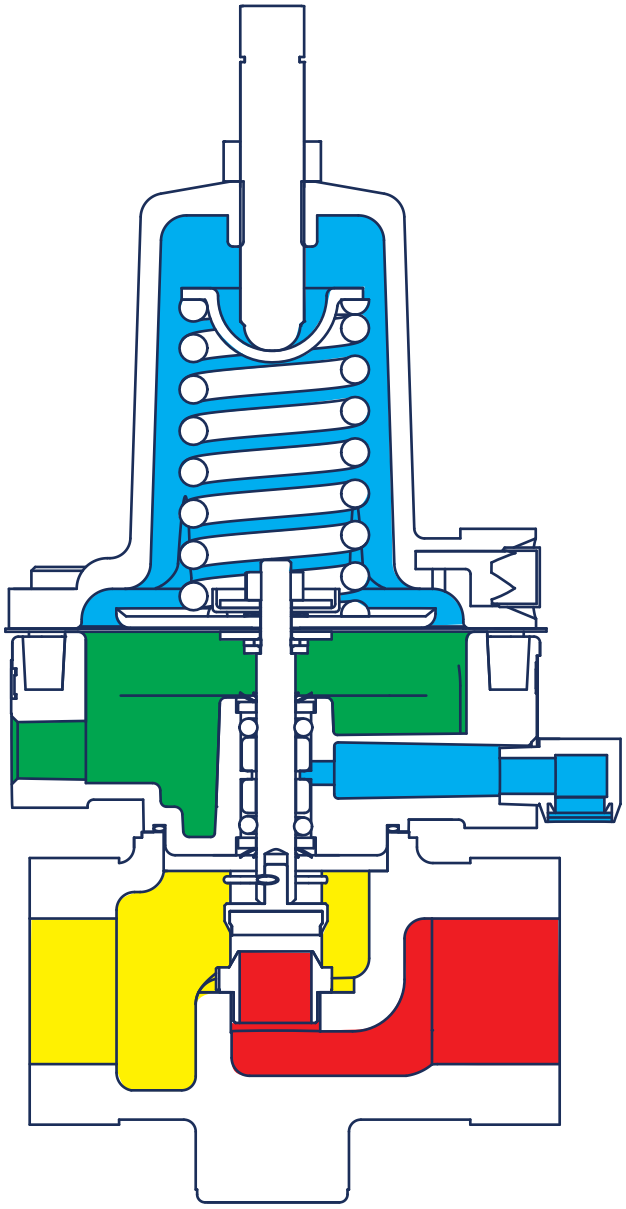

Inlet Pressure
Outlet Pressure
Atmospheric Pressure
Loading Pressure